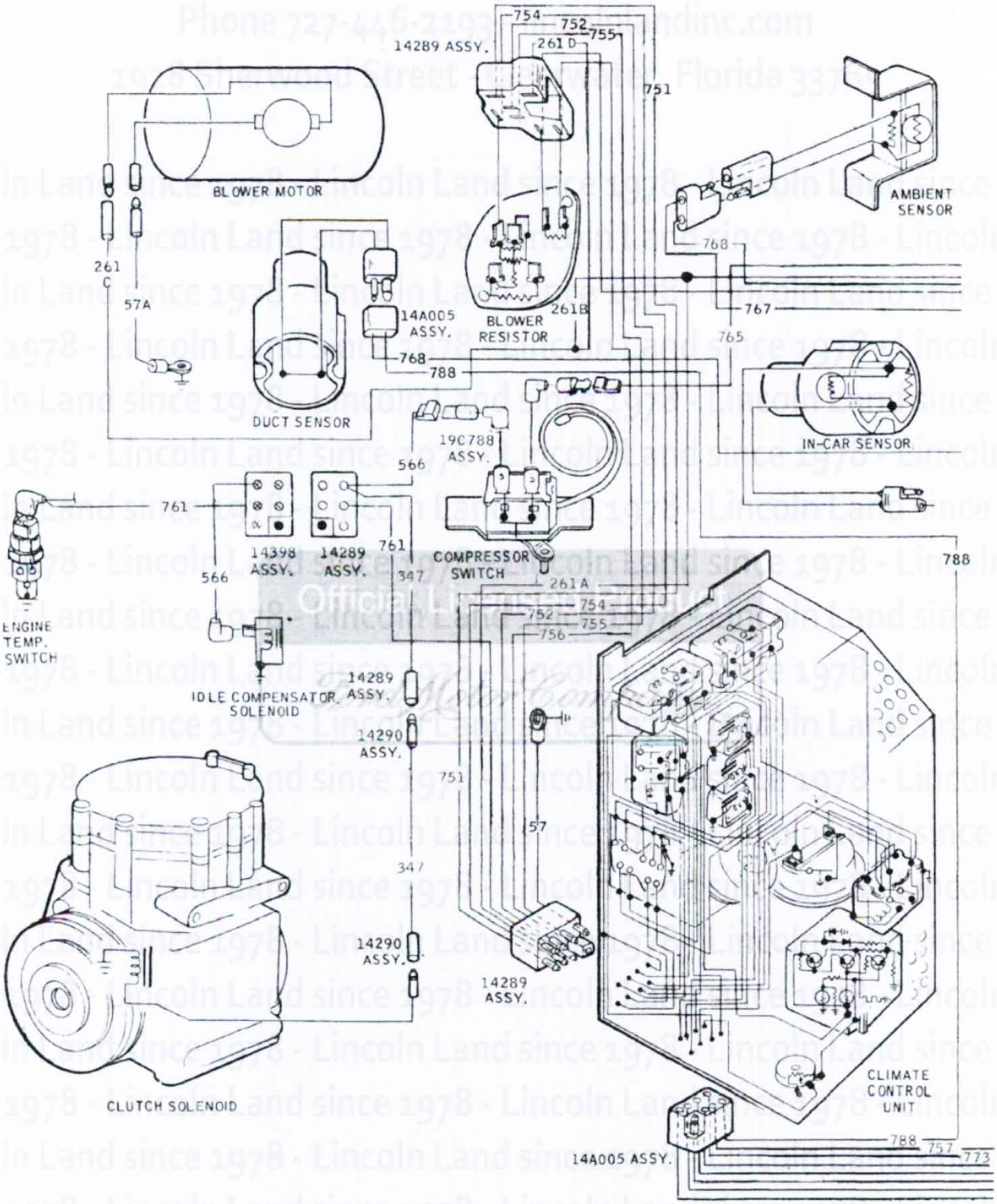

FIG. 1—Air Conditioner—Automatic Temperature Control

K 1757-B1

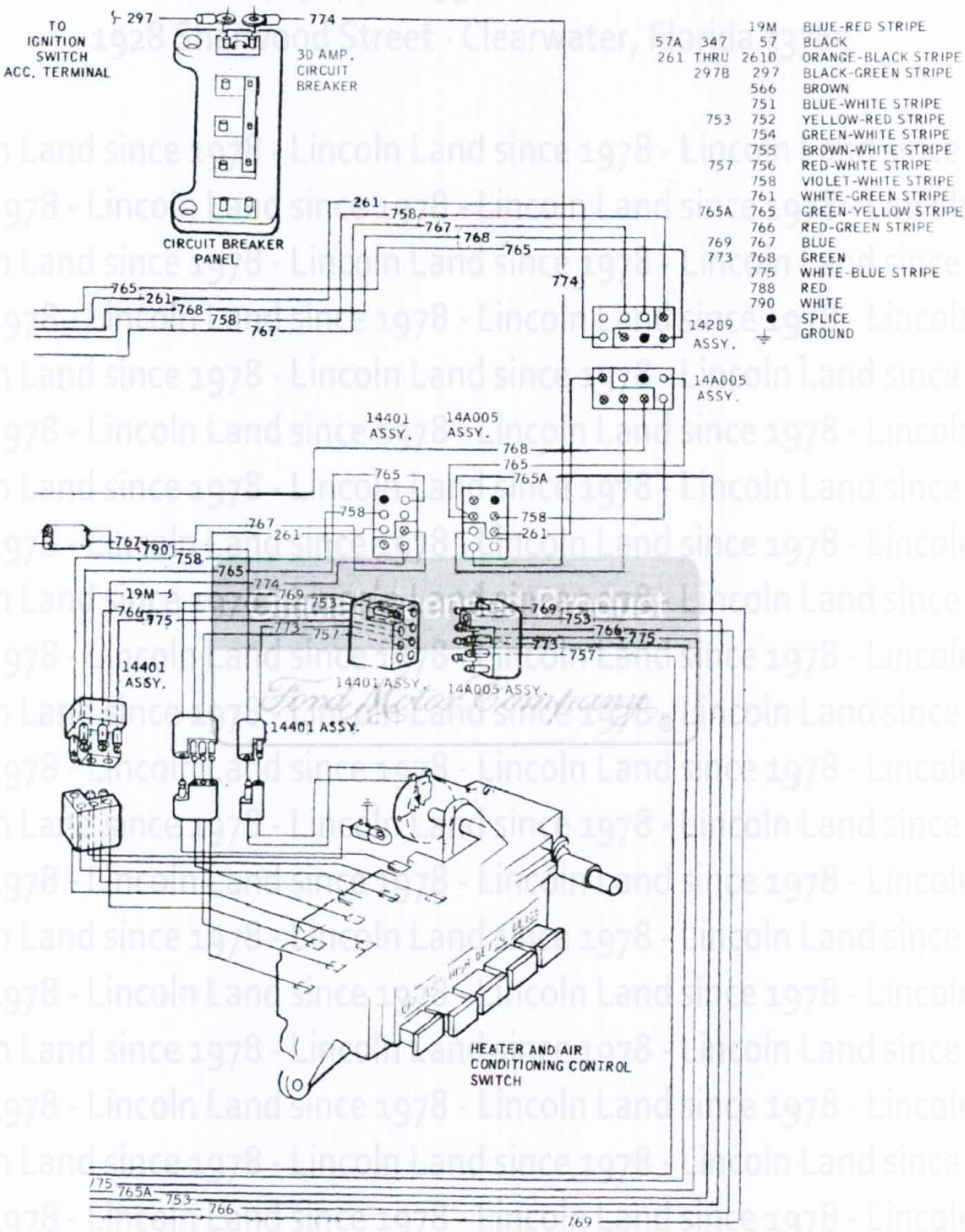

FIG. 1— Air Conditioner—Automatic Temperature Control (Continued)

K 1757-B2

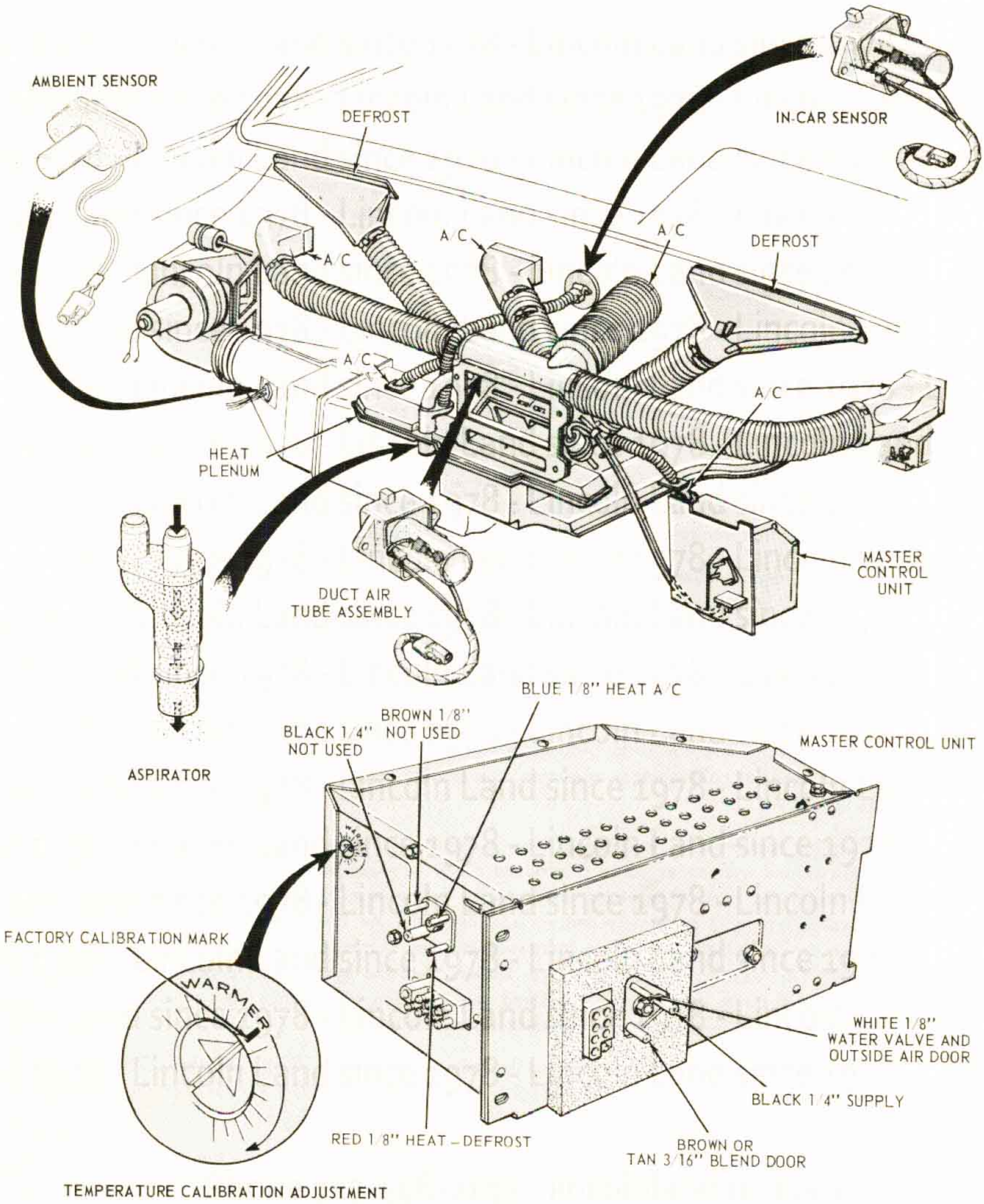

Fig. 19 – Automatic Temperature Control System Components

ELECTRICAL SYSTEM

A pictorial drawing illustrating the location of all electrical components in the Automatic Temperature Control System is shown in Figure 17. The system wiring diagram is illustrated on the opposite page, Figure 18.

The Automatic Temperature Control System employs the following electrical components: Each component is discussed on the following pages:

1. Master Control Unit
2. Temperature Sensors
3. In-Car Sensor Aspirator
4. Instrument Panel Control Assembly
5. Icing Control Switch
6. Idle Compensation Solenoid
7. Blower Motor and Resistor
8. 30 amp Circuit Breaker
9. Compressor Clutch Solenoid
10. Water Temperature Switch

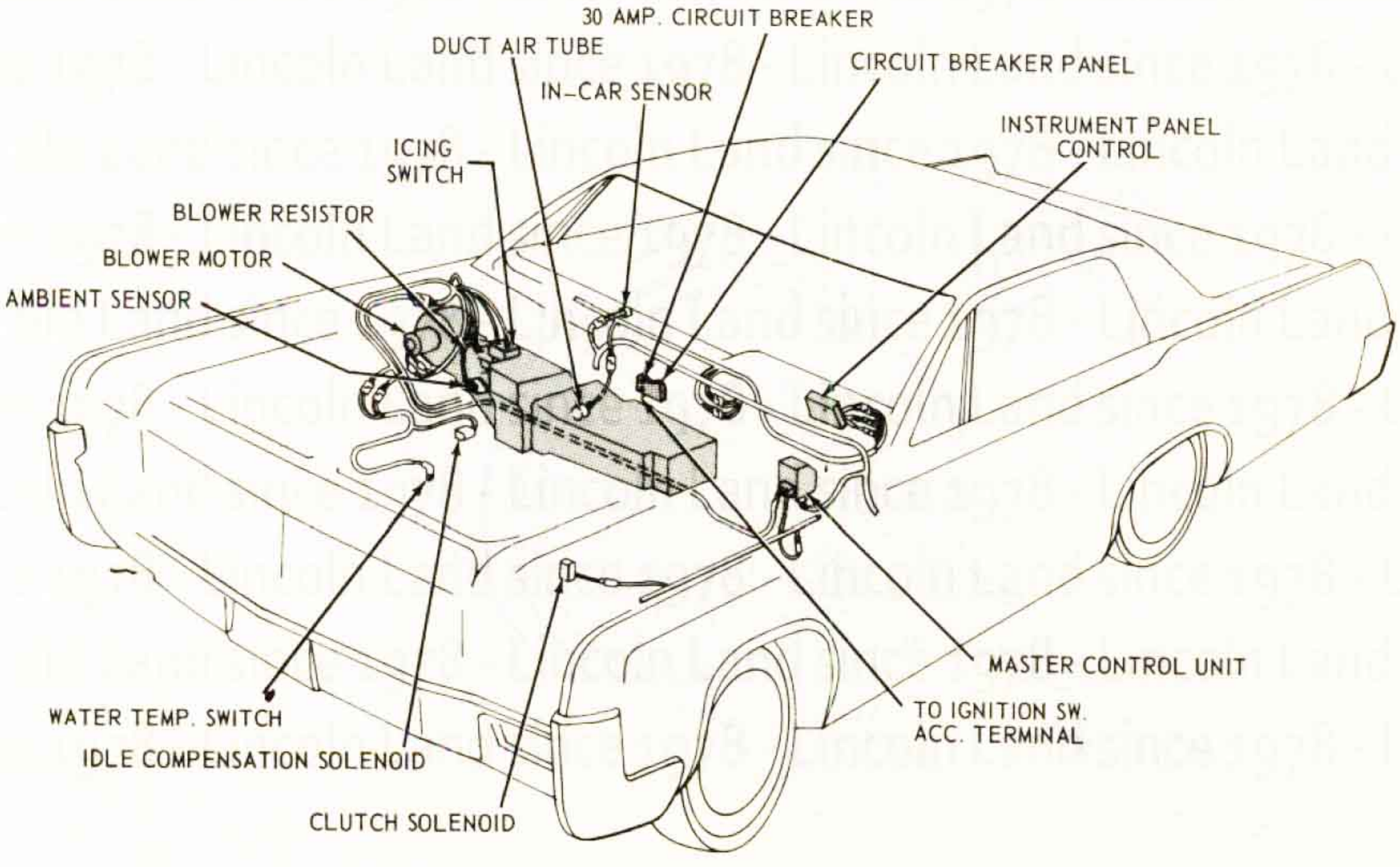

Fig. 17 – Automatic Temperature Control Electrical System Installation

WIRING COLOR CODE

	19	BLUE-RED STRIPE	774 BROWN
939	347 57	BLACK	775 WHITE-BLUE STRIPE
261B	261A 261	ORANGE-BLACK STRIPE	● SPLICE
	297	BLACK-GREEN STRIPE	⏚ GROUND
	753 752	YELLOW-RED STRIPE	
	754	GREEN-WHITE STRIPE	
	755	BROWN-WHITE STRIPE	
	757 756	RED-WHITE STRIPE	
	758	VIOLET-WHITE STRIPE	
	765A 765	GREEN-YELLOW STRIPE	
	766	RED-GREEN STRIPE	
	769	BLUE	

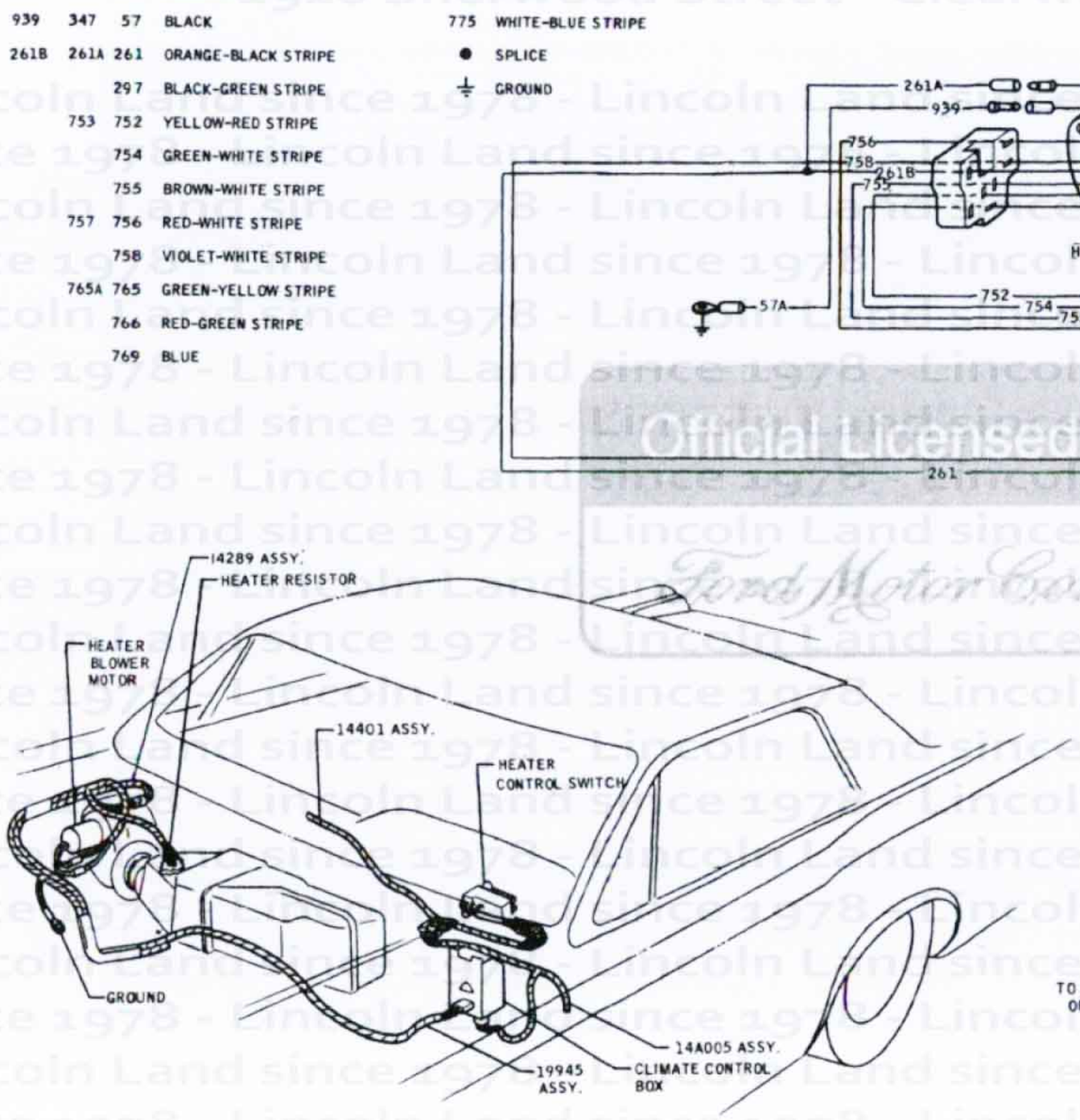

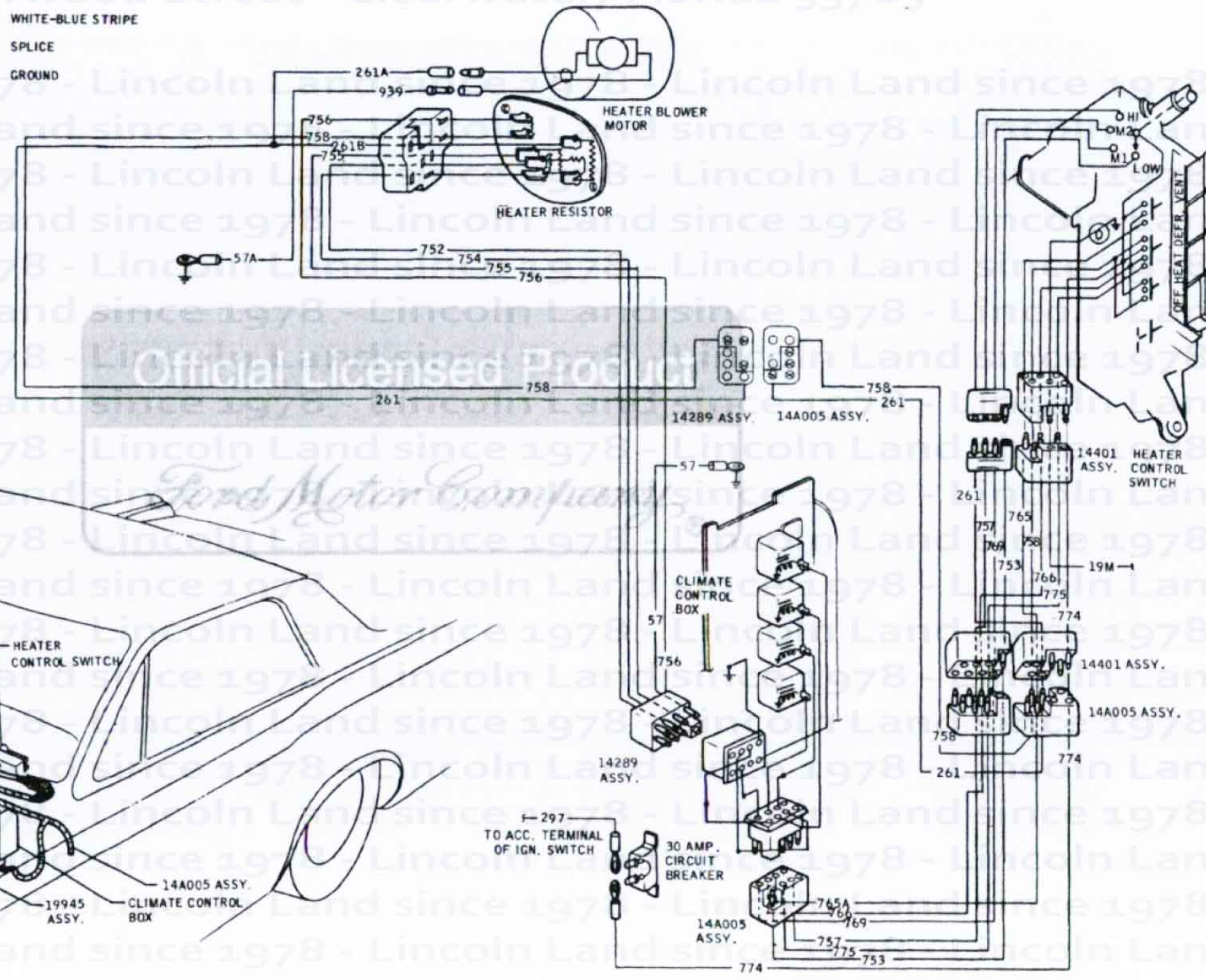

K 1762-B

FIG. 5—Ventilating and Defrosting (Non A/C)

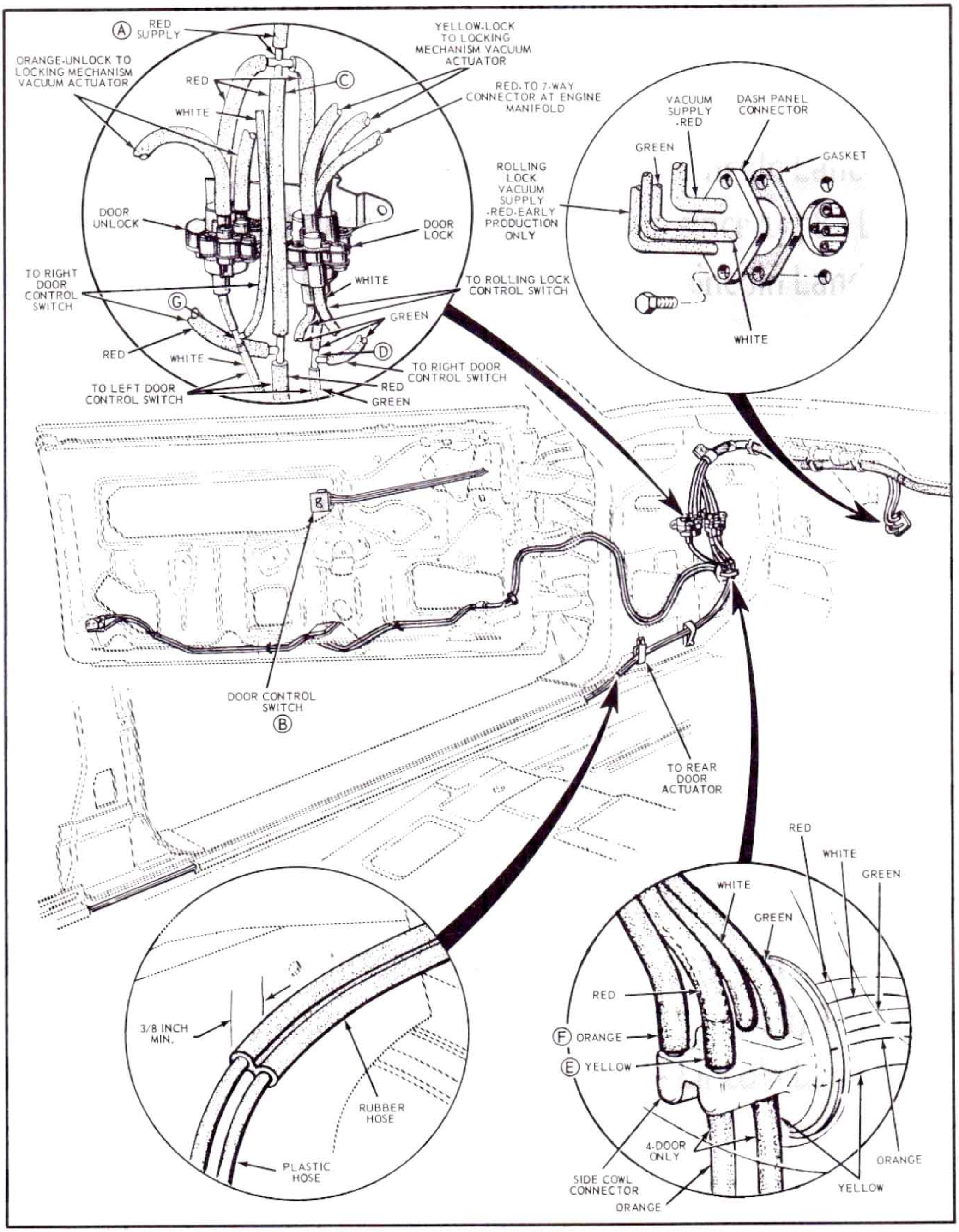

NOTE: Circled letters are for referenced points referred to in the diagnosis procedures pages 10 thru 13.

Fig. 3. – 1967 Lincoln Continental Vacuum Door Lock System

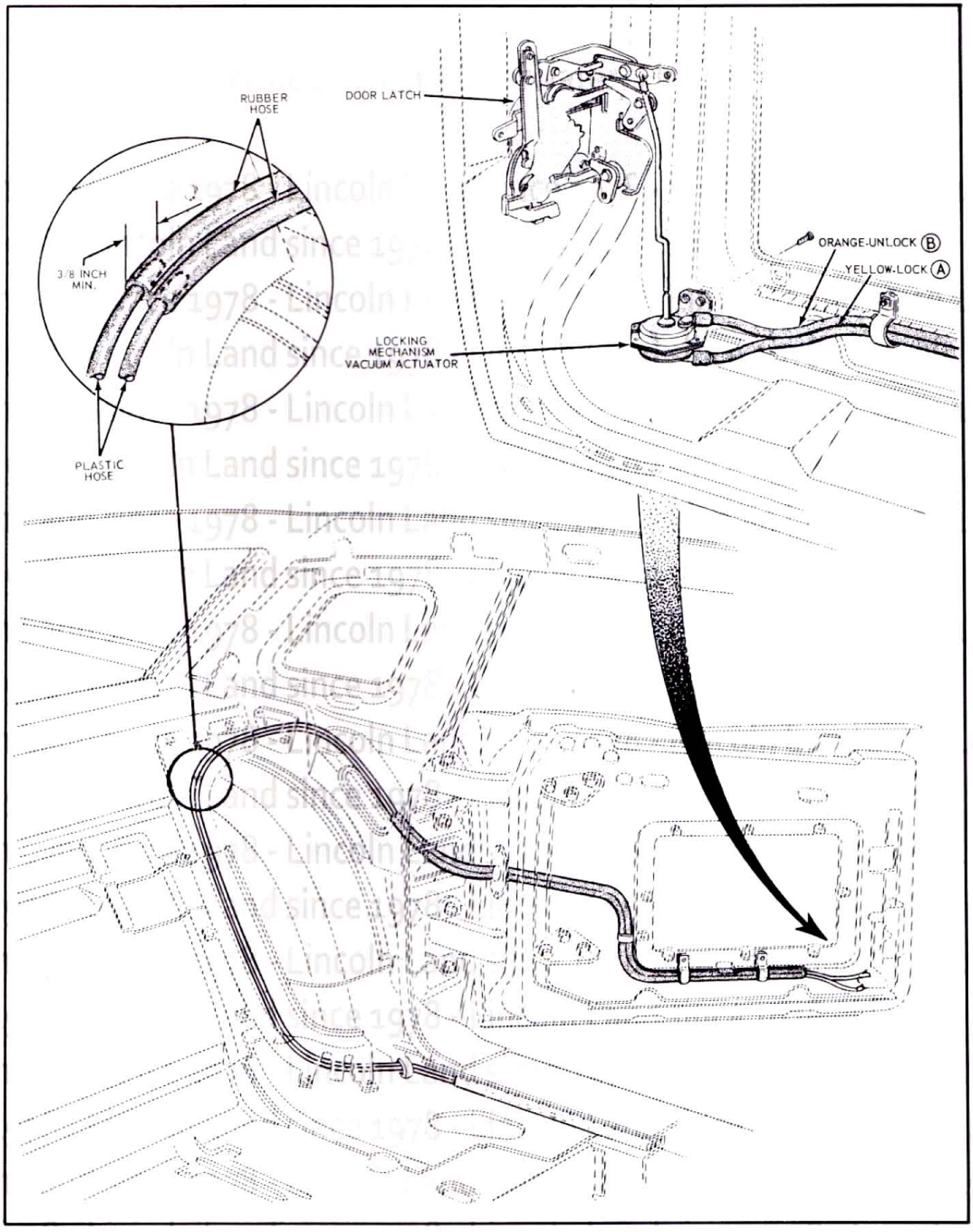

NOTE: Circled letters are for referenced points referred to in the diagnosis procedures pages 10 thru 13.

Fig. 4 – 1967 Lincoln Continental Vacuum Door Lock System

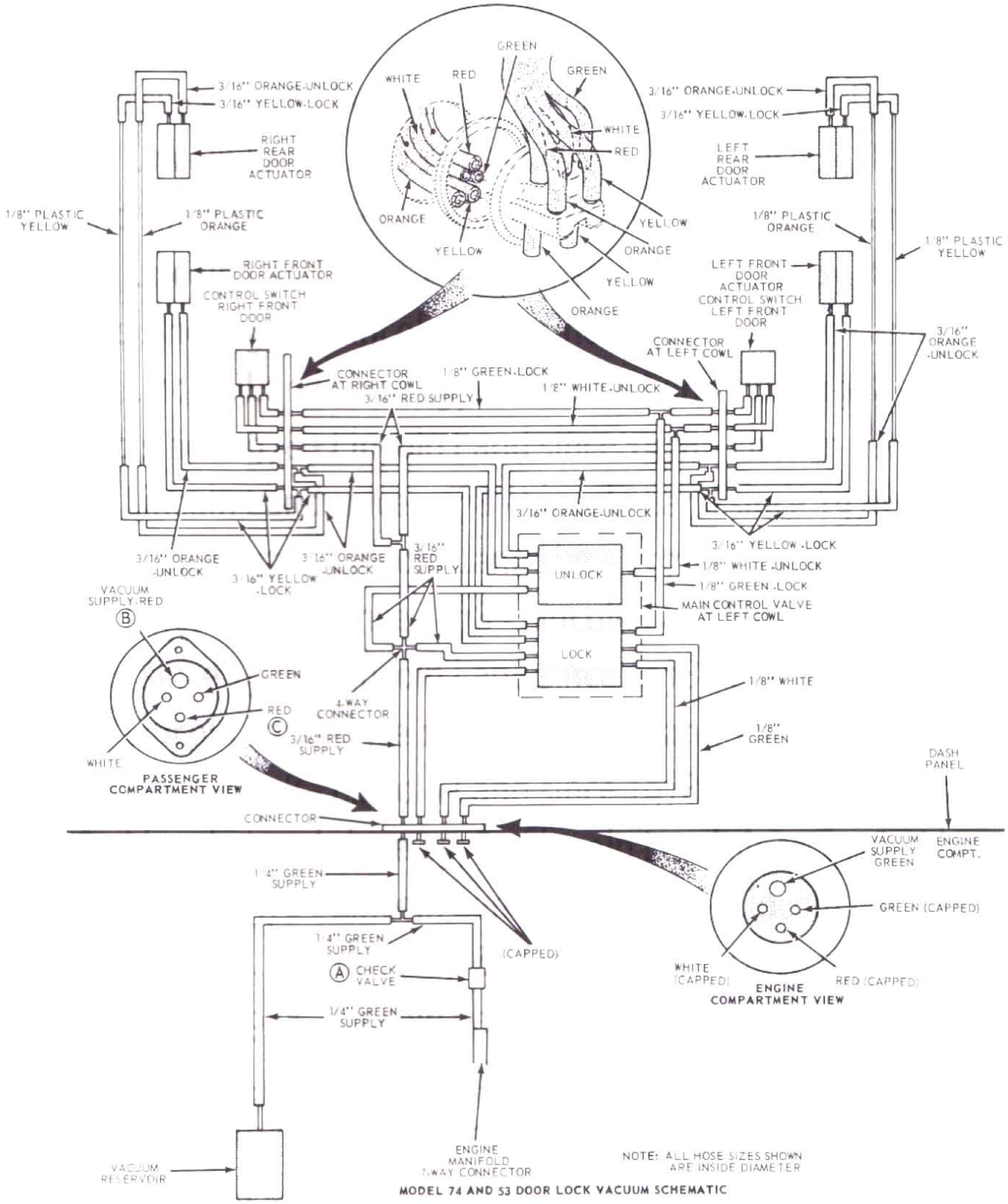

MODEL 74 AND 53 DOOR LOCK VACUUM SCHEMATIC

NOTE: Circled letters are for referenced points referred to in the diagnosis procedures pages 10 thru 13.

Fig. 1 – 1967 Lincoln Continental Vacuum Door Lock System less Rolling Door Lock Feature

Phone 727-446-2193 - lincolnlandinc.com
1928 Sherwood Street - Clearwater, Florida 33765

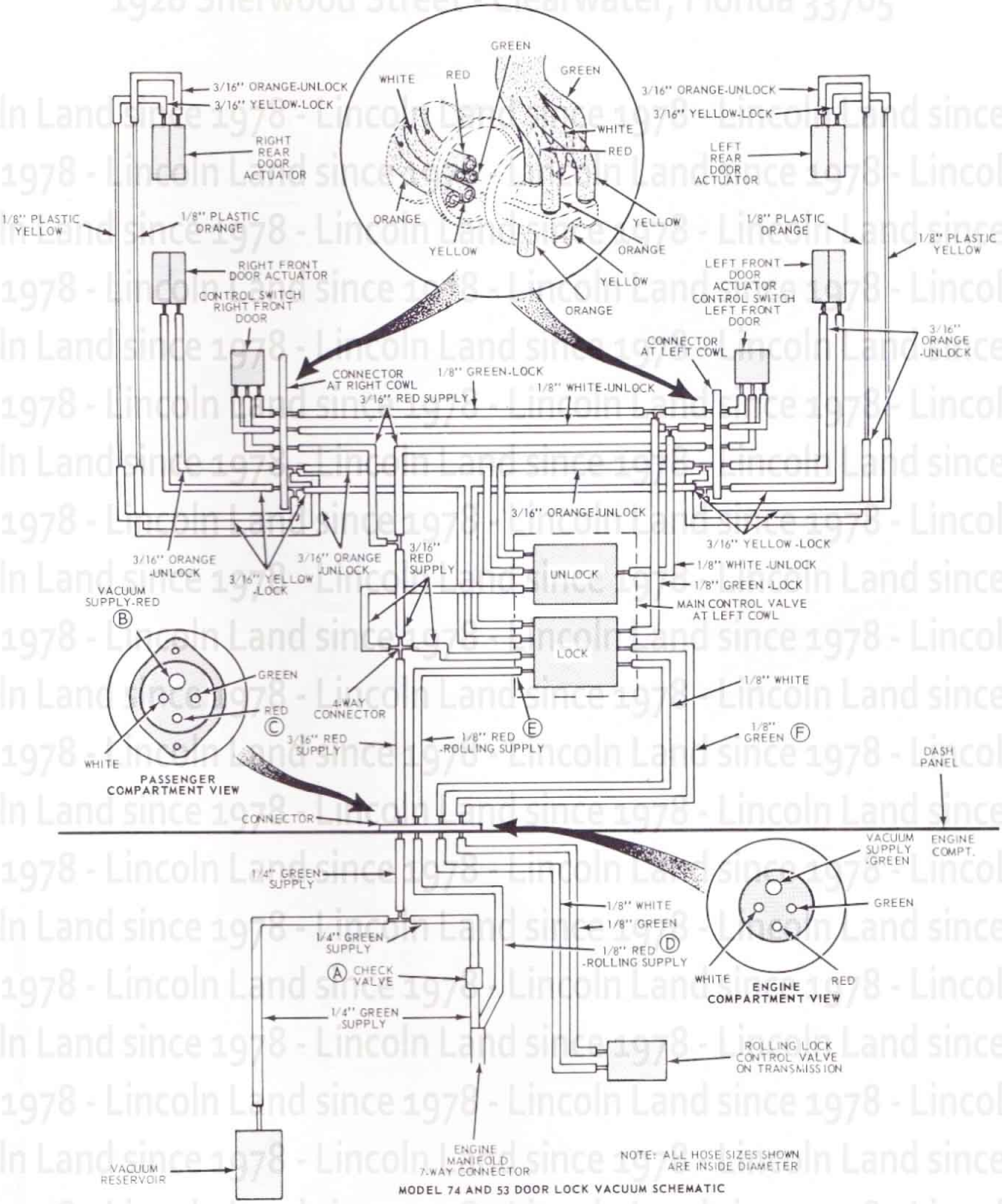

MODEL 74 AND 53 DOOR LOCK VACUUM SCHEMATIC

NOTE: Circled letters are for referenced points referred to in the diagnosis procedures pages 10 thru 13.

Fig. 2 – 1967 Lincoln Continental Vacuum Door Lock System with Rolling Door Locks

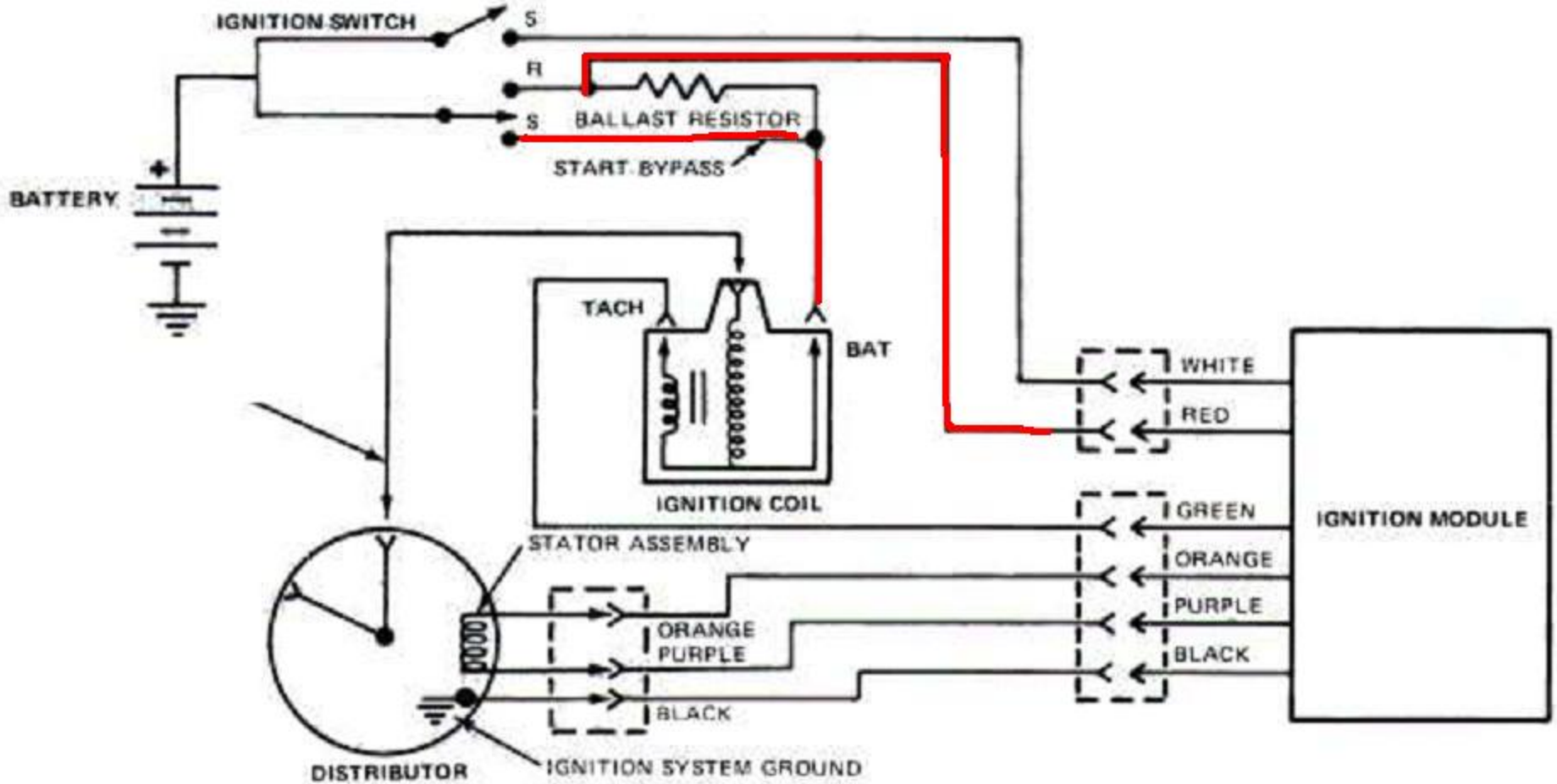
IGNITION SWITCH
S
R
S
BALLAST RESISTOR
START BYPASS
BATTERY
TACH
BAT
IGNITION COIL
WHITE
RED
GREEN
ORANGE
PURPLE
BLACK
IGNITION MODULE
STATOR ASSEMBLY
ORANGE
PURPLE
BLACK
DISTRIBUTOR
IGNITION SYSTEM GROUND

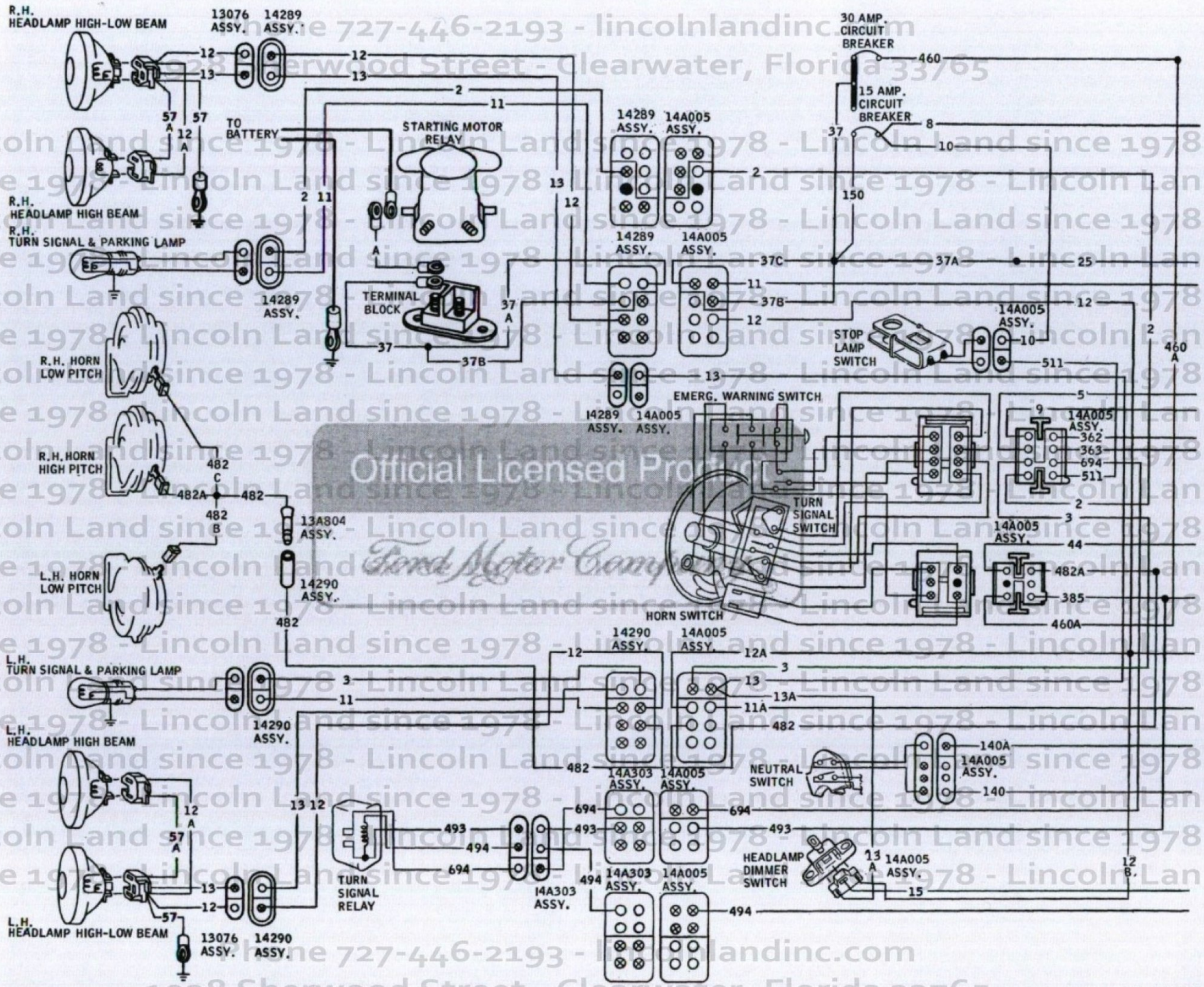

K 1747-B1

FIG. 3—Exterior Lighting, Turn Signal and Horns

Phone 727-446-2193 - lincolnlandinc.com
1928 Sherwood Street - Clearwater, Florida 33765
Lincoln Land since 1978 - Lincoln Land since 1978

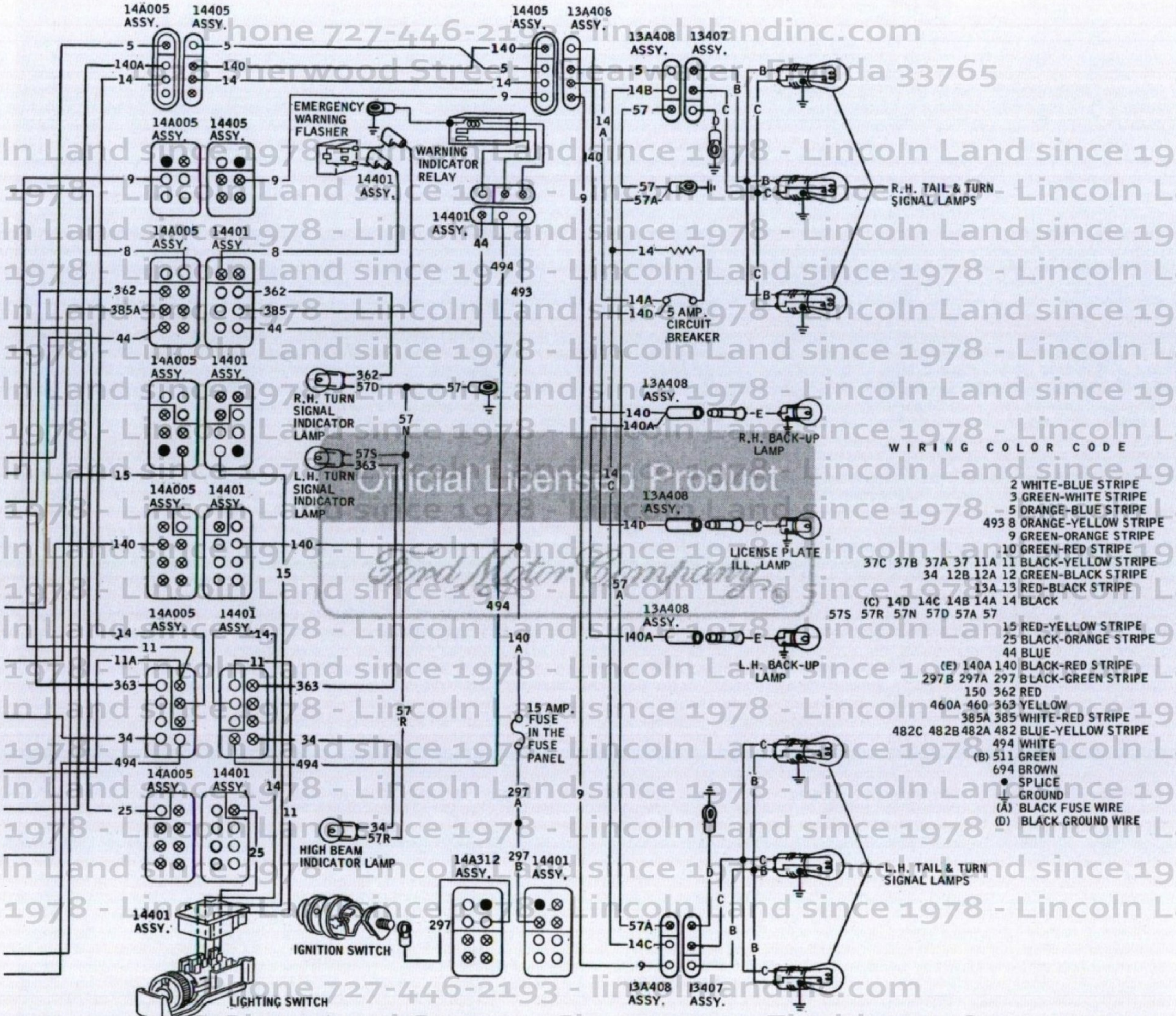

FIG. 4— Exterior Lighting, Turn Signal and Horns (Continued)

K 1747-B2

Phone 727-446-2193 - lincolnlandinc.com
1928 Sherwood Street - Clearwater, Florida 33765
Lincoln Land since 1978 - Lincoln Land since 1978
Official Licensed Product
Ford Motor Company

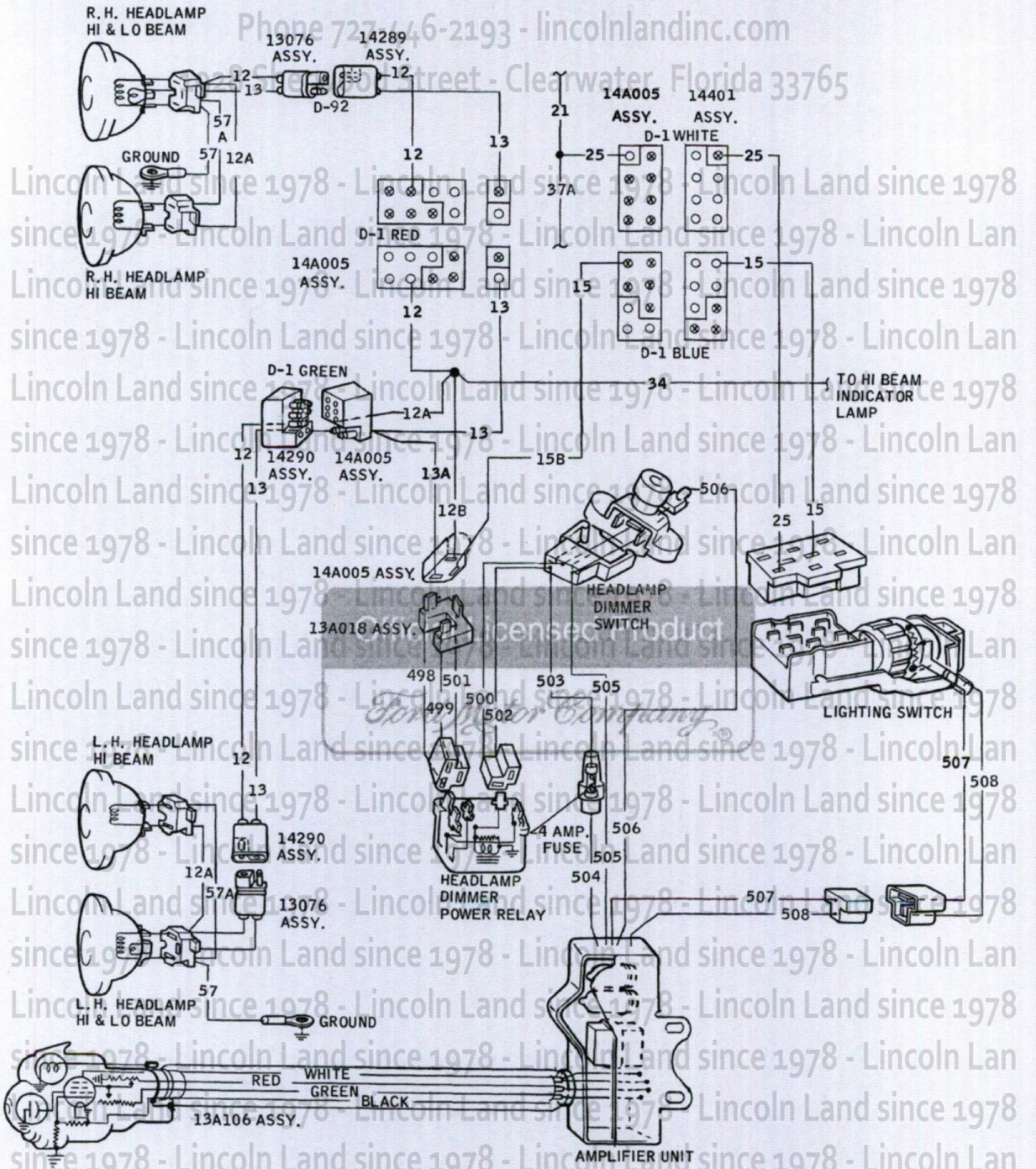

FIG. 4— Automatic Headlight Dimmer

K 1764-A

Phone 727-446-2193 - lincolnlandinc.com
1028 Sherwood Street - Clearwater, Florida 33765
Lincoln Land since 1978 - Lincoln Land since 1978 - Lincoln Land since 1978
Official Licensed Product
Ford Motor Company

WIRING COLOR CODE

				4	WHITE-BLACK STRIPE
				16	RED-GREEN STRIPE
				16A	PINK
				21	YELLOW
			26	26A	641 BLACK-RED STRIPE
					29 YELLOW-WHITE STRIPE
297-A-B	30	THRU			30C BLACK-GREEN STRIPE
					31 WHITE-RED STRIPE
			32B	32	32A RED-BLUE STRIPE
					35 WHITE
			37	37A	37B BLACK-YELLOW STRIPE
48	38C	38B	38A	98	57 BLACK
					262 BROWN
					640 RED-YELLOW STRIPE
				904	647 RED
				904	904A GREEN-RED STRIPE
					• SPLICE
					⏚ GROUND
					A BLACK FUSE WIRE

K 2112-B

FIG. 6—Ignition, Starting, Charging and Gauges

Phone 727-446-2193 - lincolnlandinc.com
1928 Sherwood Street - Clearwater, Florida 33765
Lincoln Land since 1978 - Lincoln Land since 1978 - Lincoln Land since 1978
Official Licensed Product
Ford Motor Company

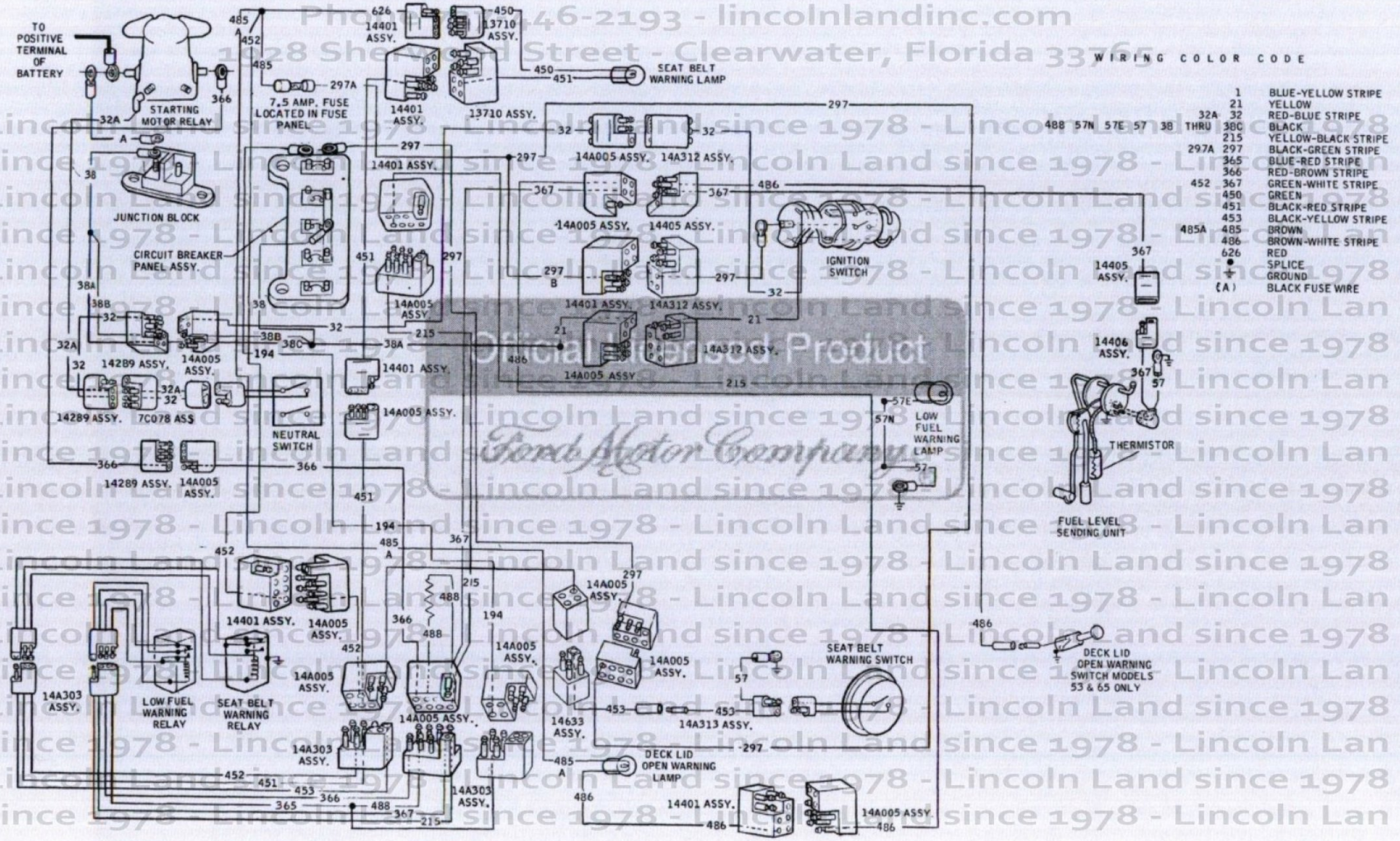

K 1761-B

FIG. 7—Indicator Warning System

Phone 727-446-2193 - lincolnlandinc.com
1928 Sherwood Street - Clearwater, Florida 33765

Phone 727-446-2193 - lincolnlandinc.com
1928 Sherwood Street - Clearwater, Florida 33765

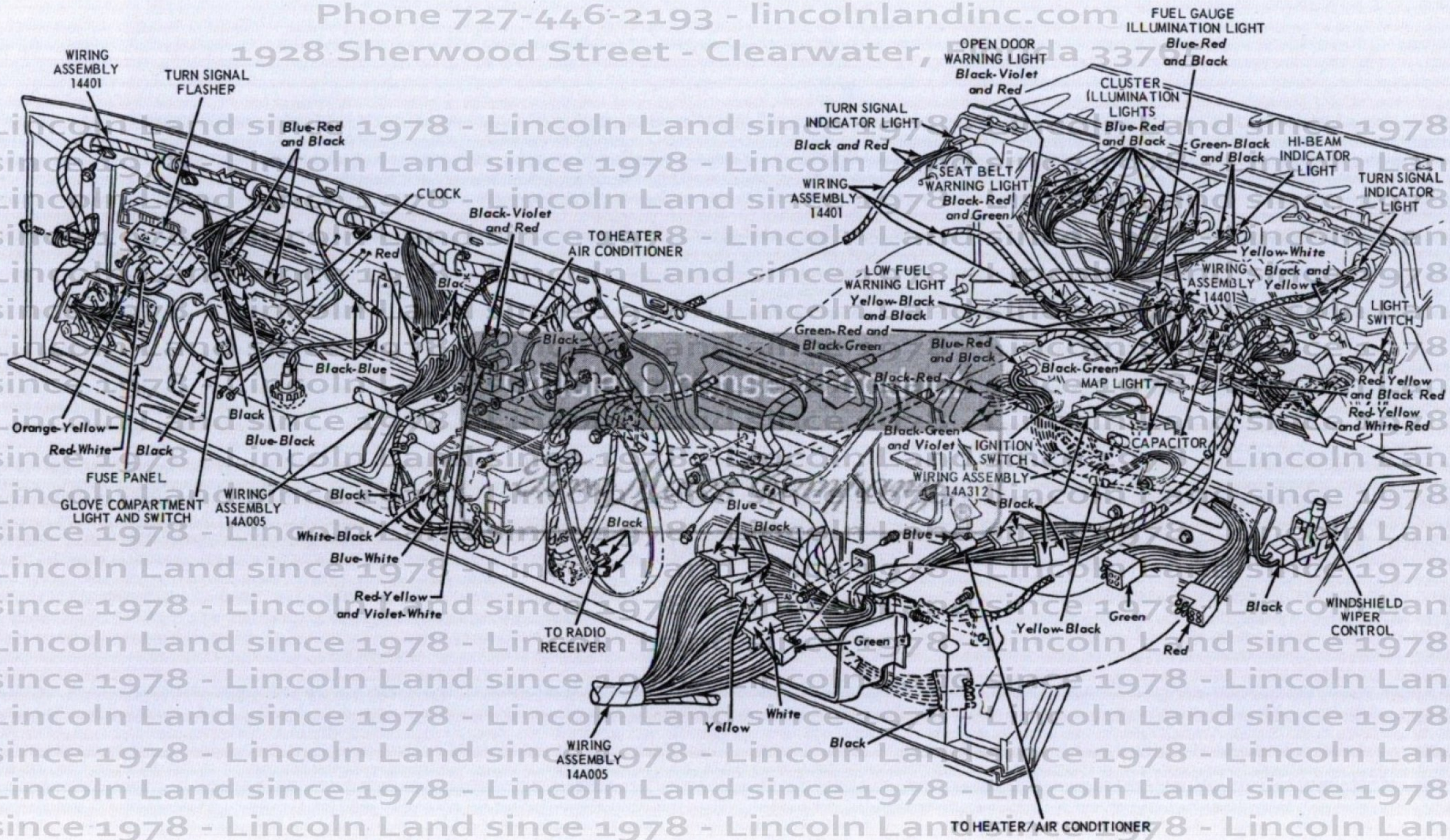

FIG. 10— Instrument Panel

K 1758-B

Phone 727-446-2193 - lincolnlandinc.com
1928 Sherwood Street - Clearwater, Florida 33765

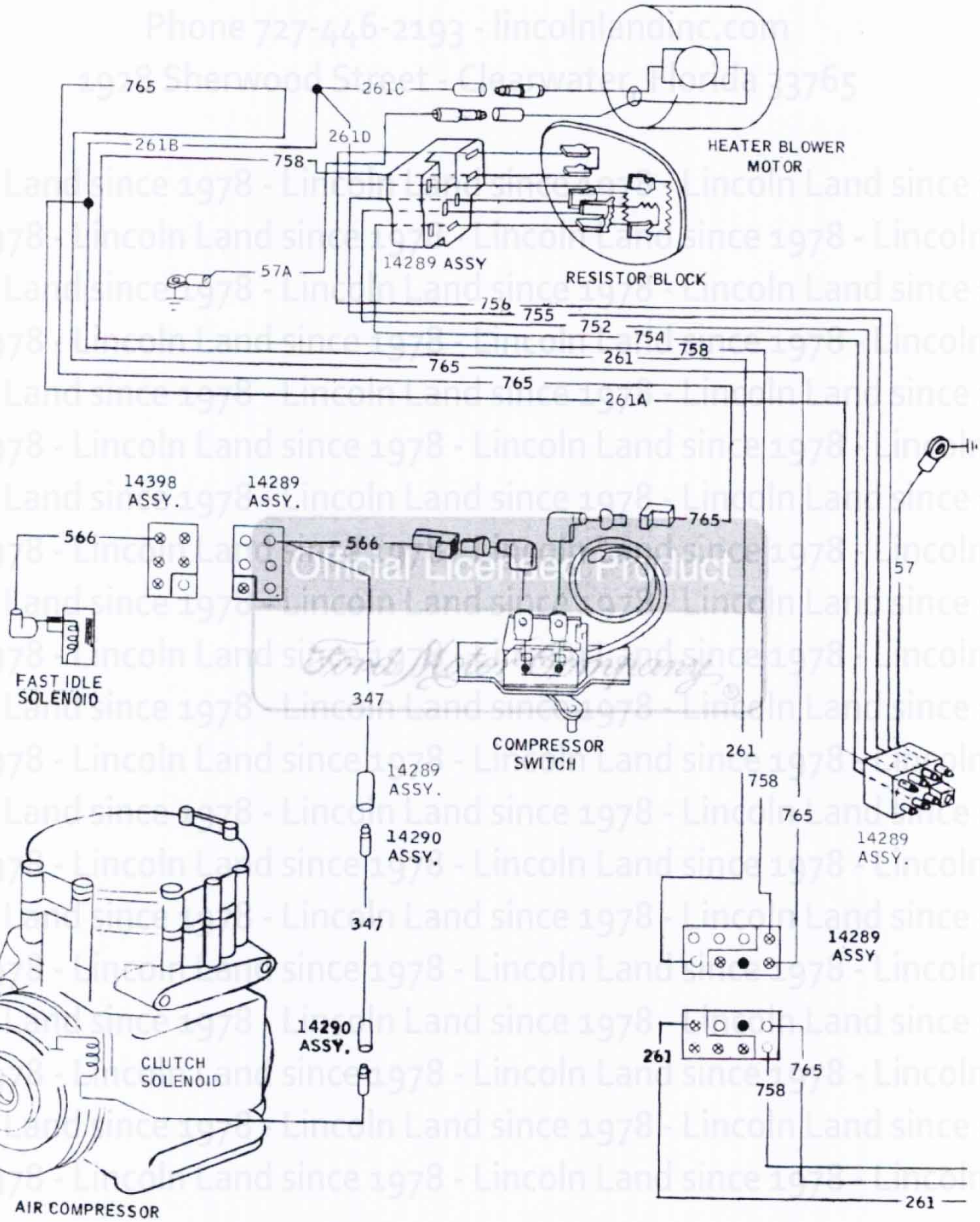

FIG. 12—Manual Temperature Control—Air Conditioner Heater

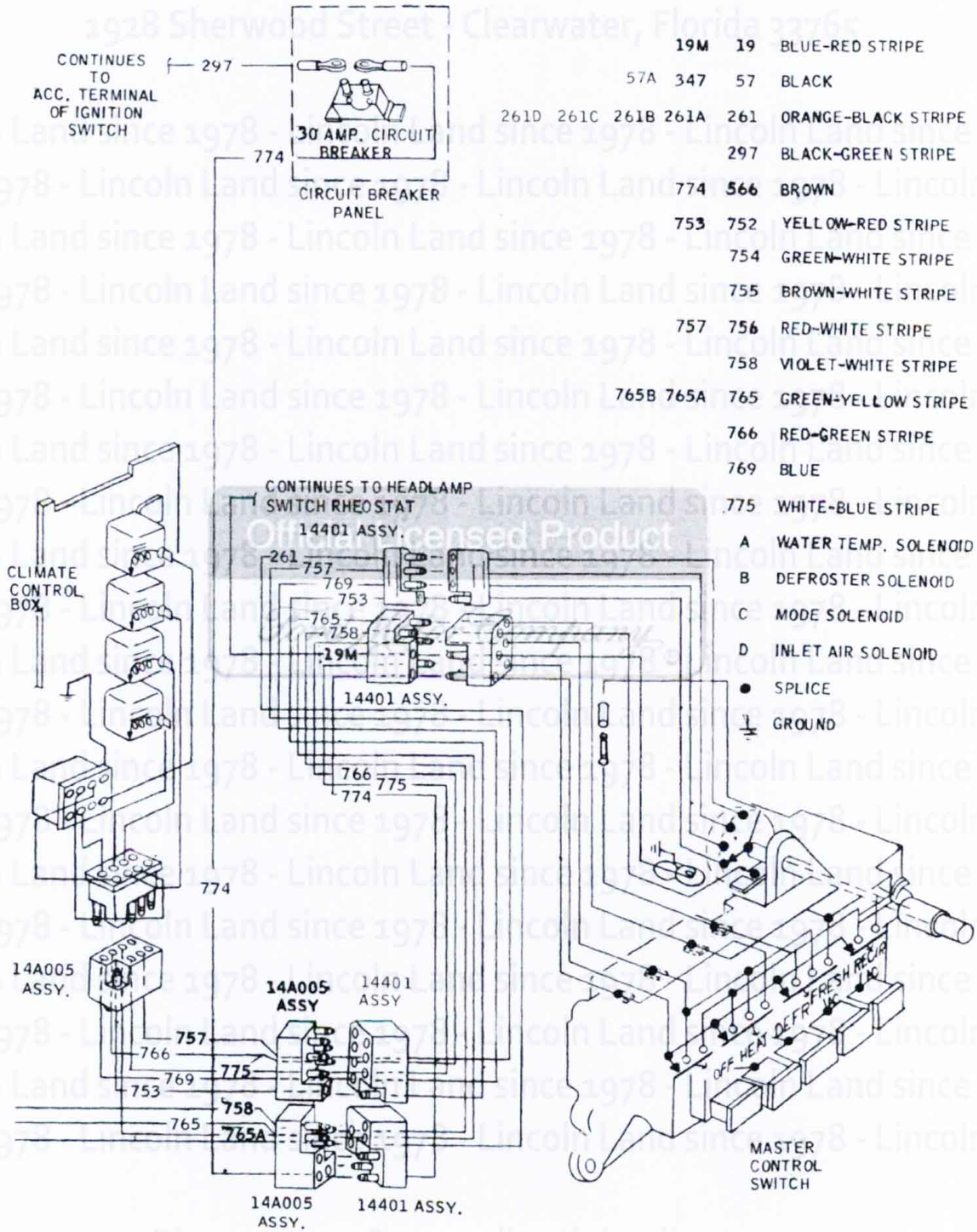

WIRING COLOR CODE

	19M	19	BLUE-RED STRIPE
57A	347	57	BLACK
261D 261C	261B 261A	261	ORANGE-BLACK STRIPE
		297	BLACK-GREEN STRIPE
	774	566	BROWN
	753	752	YELLOW-RED STRIPE
		754	GREEN-WHITE STRIPE
		755	BROWN-WHITE STRIPE
	757	756	RED-WHITE STRIPE
		758	VIOLET-WHITE STRIPE
765B	765A	765	GREEN-YELLOW STRIPE
		766	RED-GREEN STRIPE
		769	BLUE
		775	WHITE-BLUE STRIPE
		A	WATER TEMP. SOLENOID
		B	DEFROSTER SOLENOID
		C	MODE SOLENOID
		D	INLET AIR SOLENOID
		●	SPLICE
		⏚	GROUND

K 1795-B2

FIG. 12—Manual Temperature Control—Air Conditioner Heater (Continued)

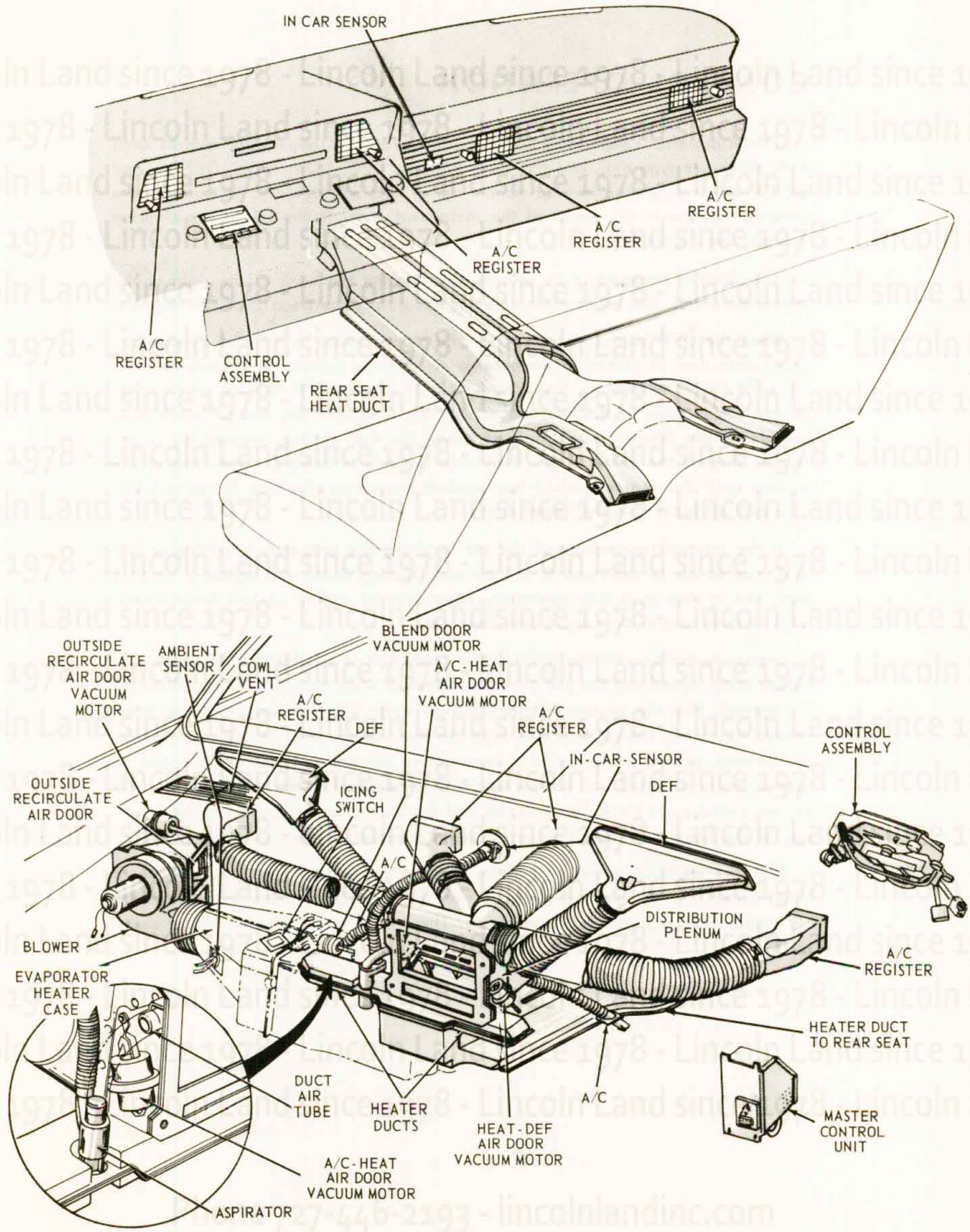

Fig. 1 – 1967 Lincoln Continental – Automatic Temperature Control System

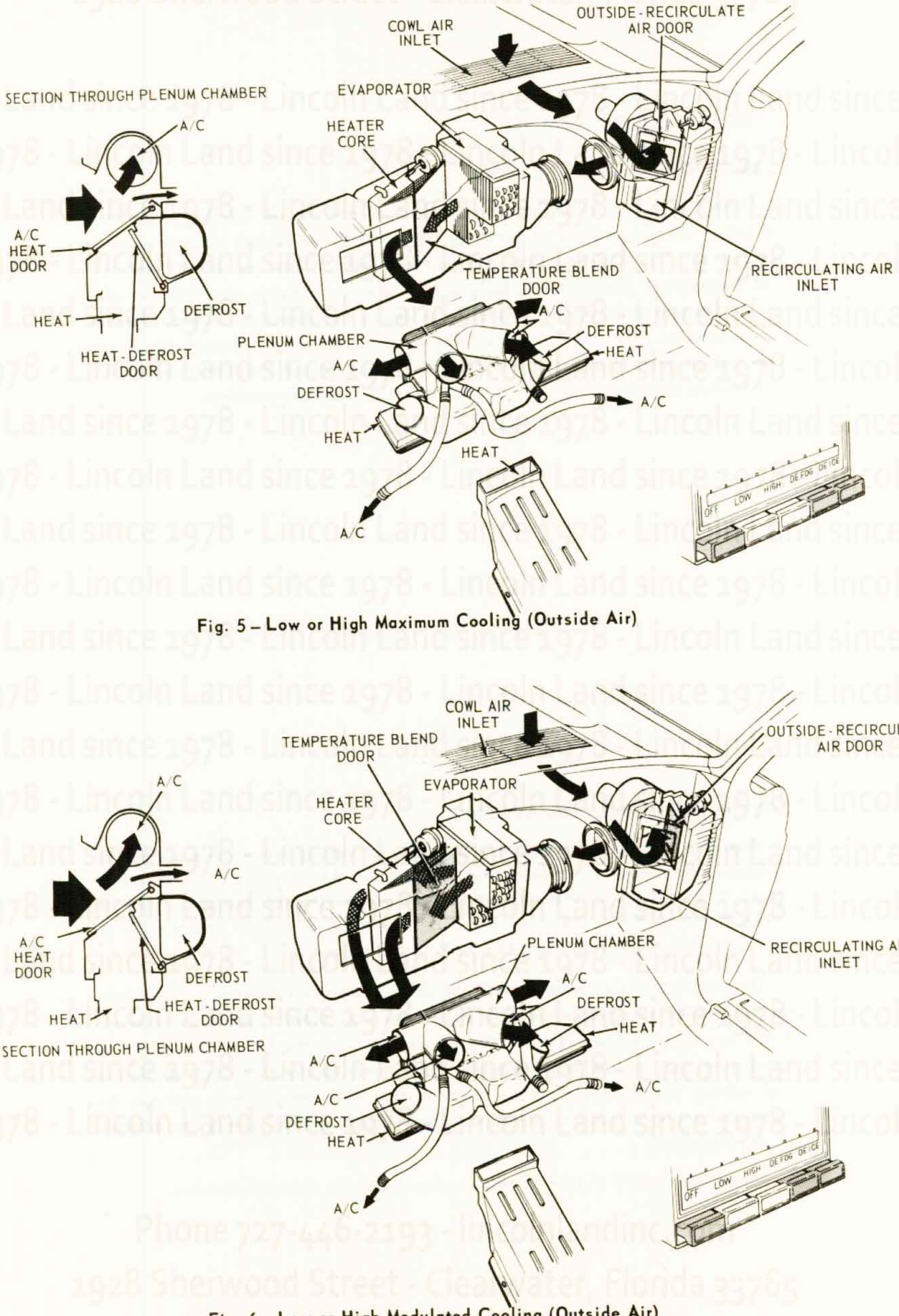

Fig. 5 – Low or High Maximum Cooling (Outside Air)

Fig. 6 – Low or High Modulated Cooling (Outside Air)

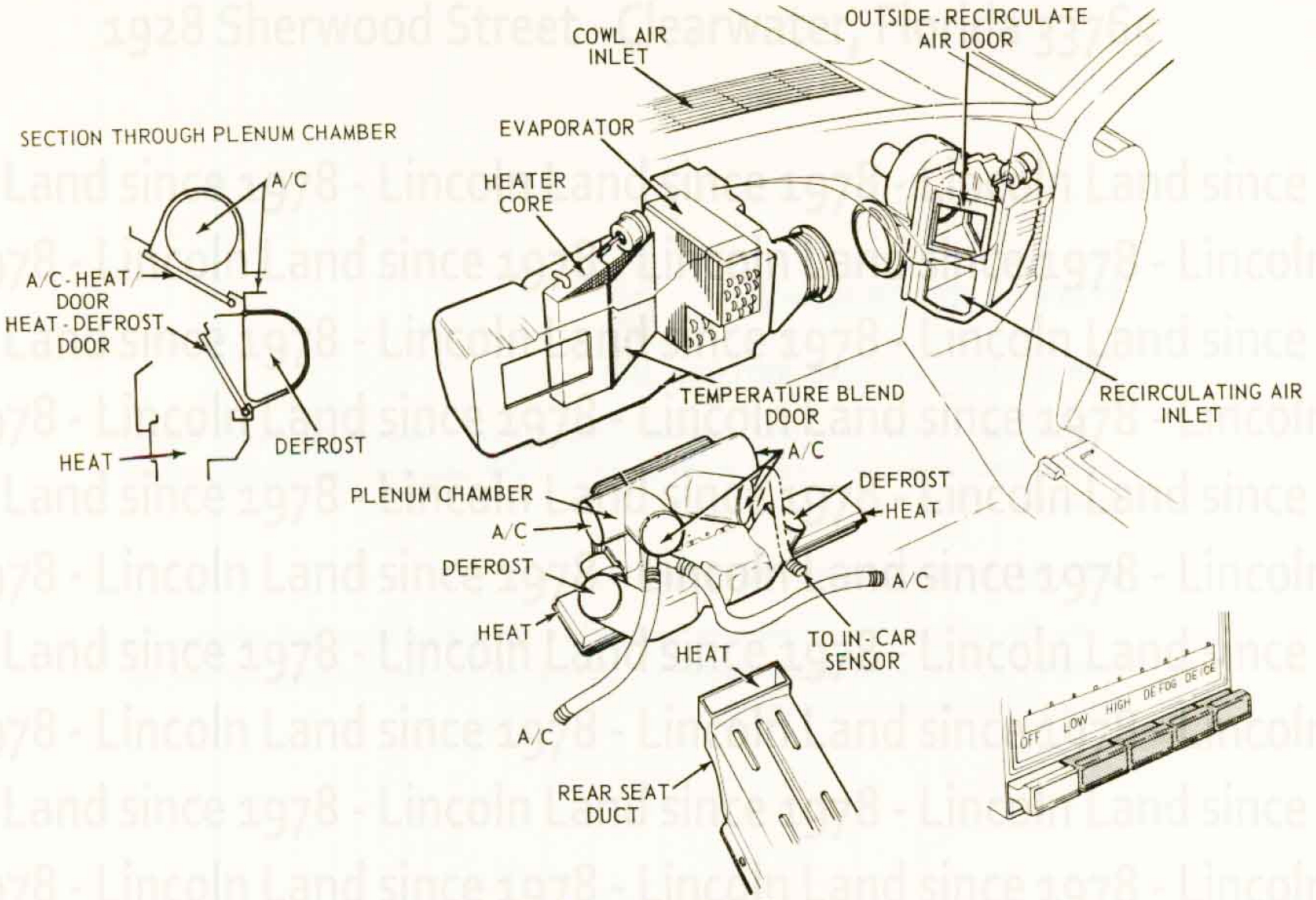

Fig. 3 – Control in OFF Position

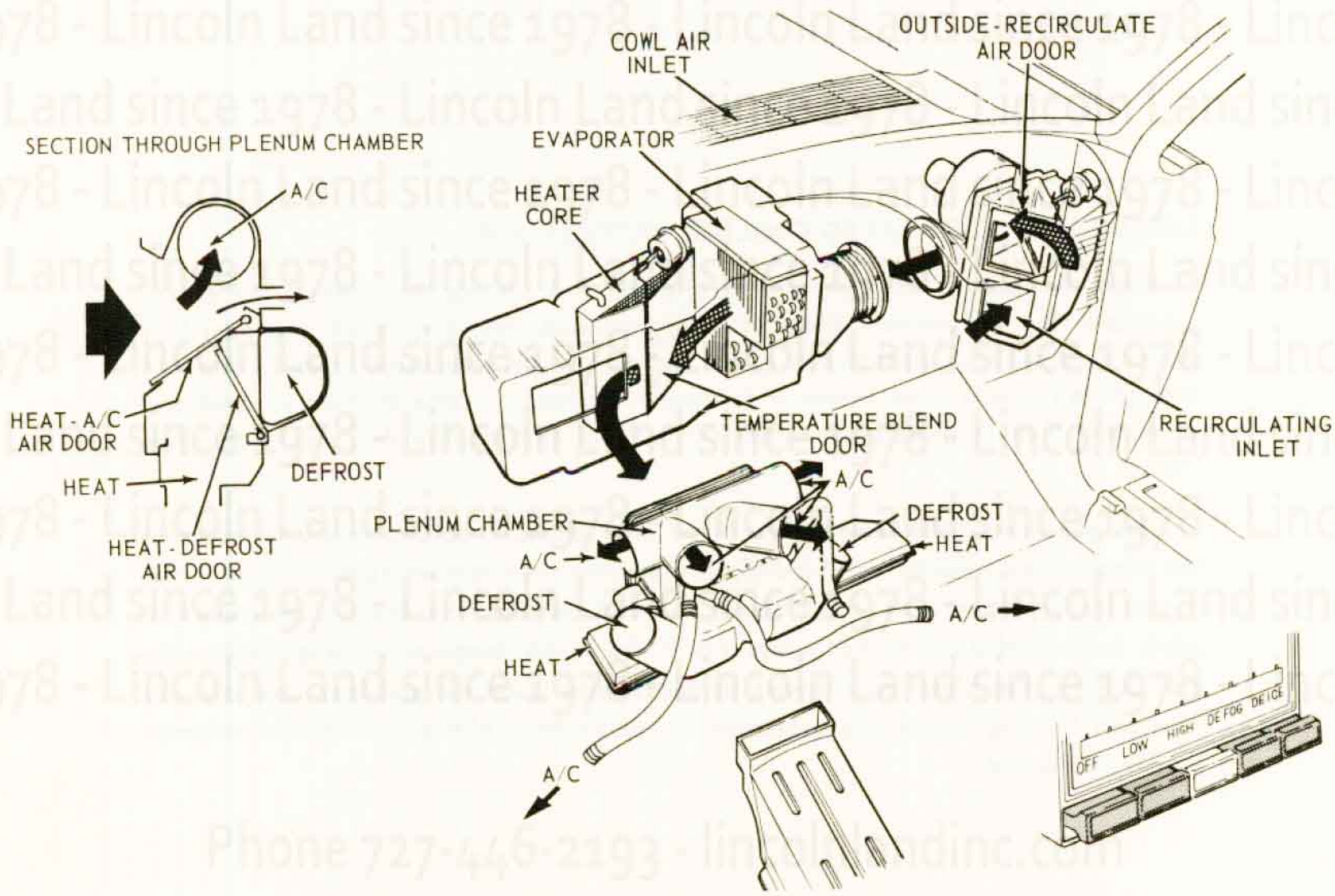

Fig. 4 – High Maximum Cooling (Recirculate)

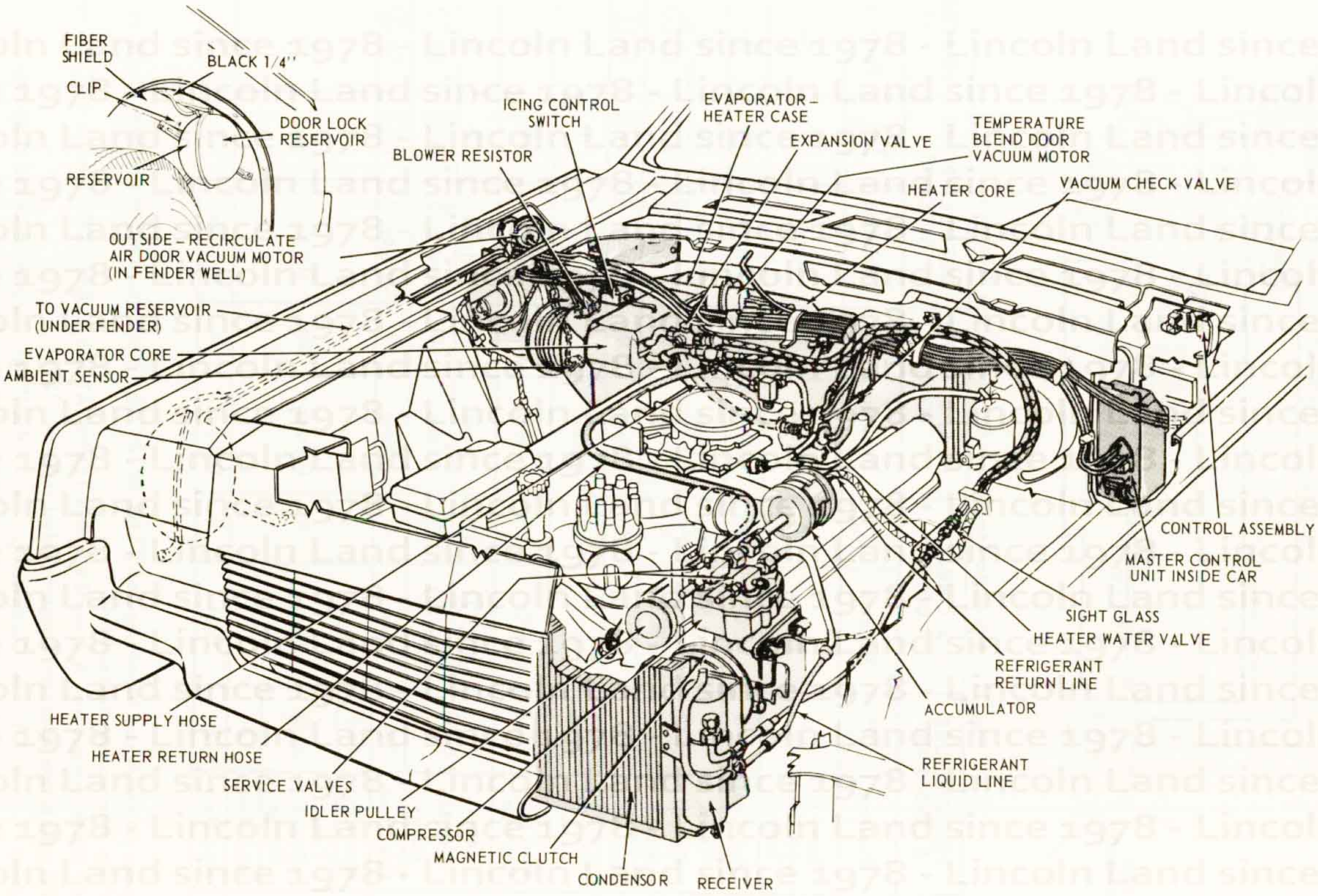

Fig. 13 – Automatic Temperature Control Vacuum System (Engine Compartment)

MASTER CONTROL UNIT – TECHNICAL DISCUSSION

In DEFOG system operation is the same as in HIGH except outside air is used at all times and the Heat-Defrost door is in the defrost position. In DEICE, power is supplied directly to the amplifier, overiding all signals and resulting in maximum heat-high blower operation.

Temperature adjustment of individual preference in the range of 65 to 85 degrees is provided by the temperature control knob, rheostat and dial. If the temperature dial is positioned warmer, the rheostat adds resistance to the sensor string. The effect is the same as if the sensor thermistors were cooled and had more resistance. This causes amplifier and transducer response that increases vacuum output. This in turn increases heater output until the sensor thermistors have become warmer and the sensor string resistance has changed to compensate for the control dial adjustment. The system then regulates at the new temperature indicated on the dial. A similar but opposite reaction occurs when the temperature dial is set cooler.

Blower motor speed is controlled by the vacuum-operated servo switch. With either high or low vacuum from the transducer, the switch cuts out blower resistors to provide high blower speed. As the transducer vacuum regulates between the two extremes and car temperature approaches the dial setting, the blower voltage and speed are reduced by cutting in resistors. There are five switch positions to provide five blower speeds in LOW. In HIGH and DEFOG, a push-button controlled relay eliminates the two lowest switch steps and cuts out an additional resistor, giving higher blower voltages and speeds.

The vacuum-operated servo switch closes the electrical circuit to the outside-recirculate air door vacuum solenoid when transducer vacuum is above 5-5½ inches Hg. The LOW, DEFOG and DEICE push buttons also energize this solenoid. The A/C-Heat air door vacuum solenoid is energized (in LOW and HIGH) by the vacuum-operated servo switch when transducer vacuum is below 7¾ to 8¼ Hg. The Heat-Defrost air door vacuum solenoid is energized by the DEFOG and DEICE push buttons.

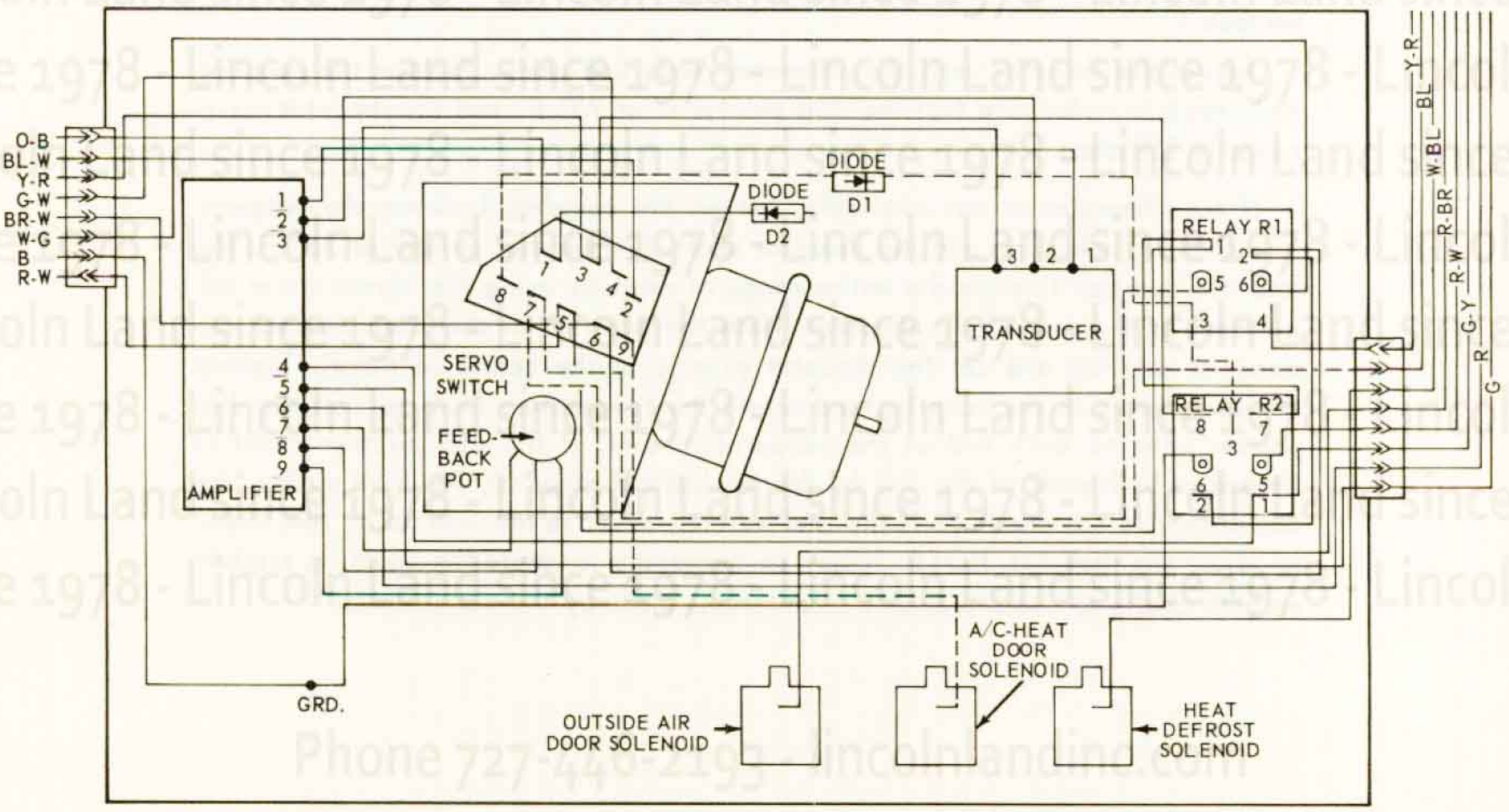

Fig. 20 – Master Control Unit and Related Component Schematic

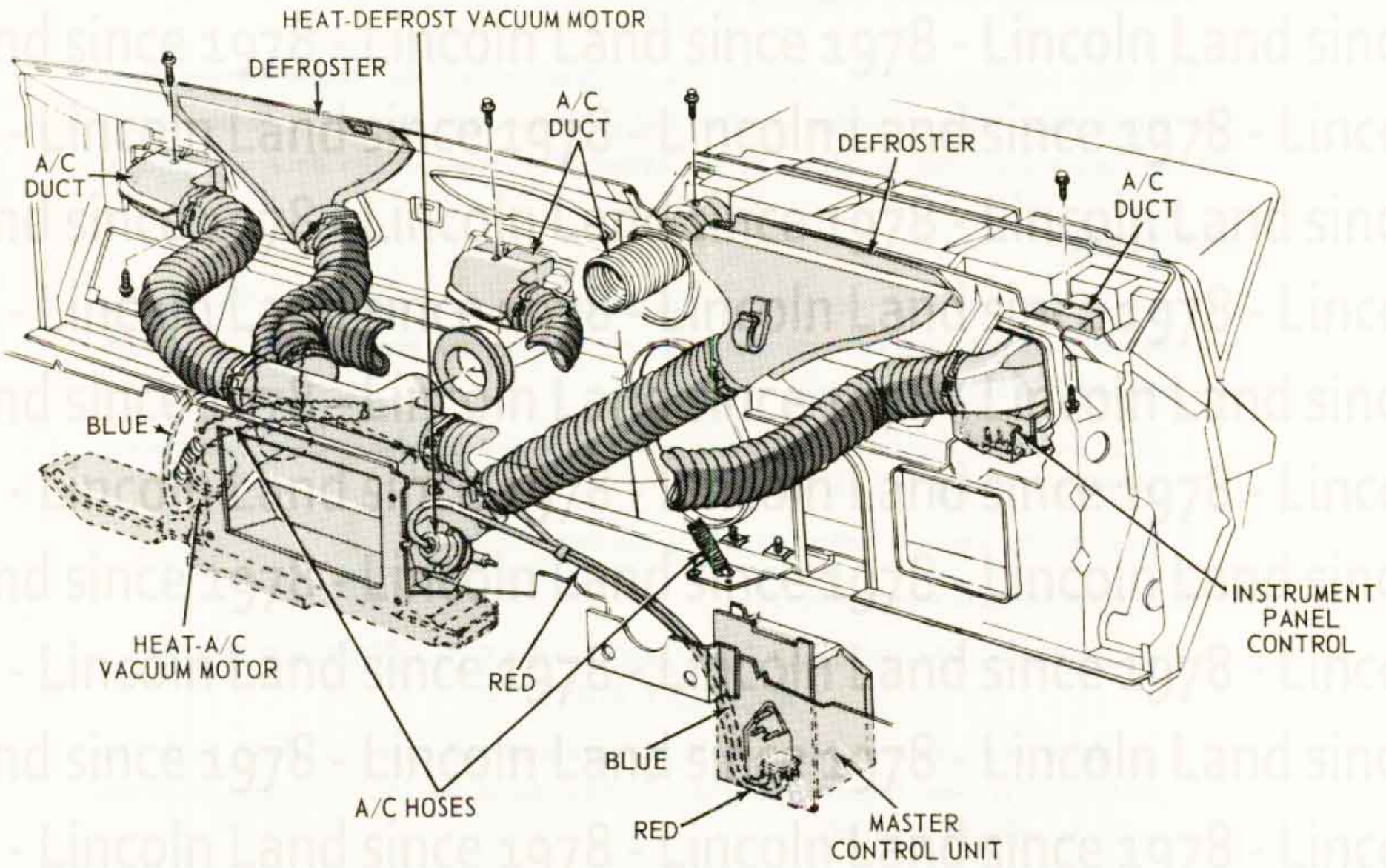

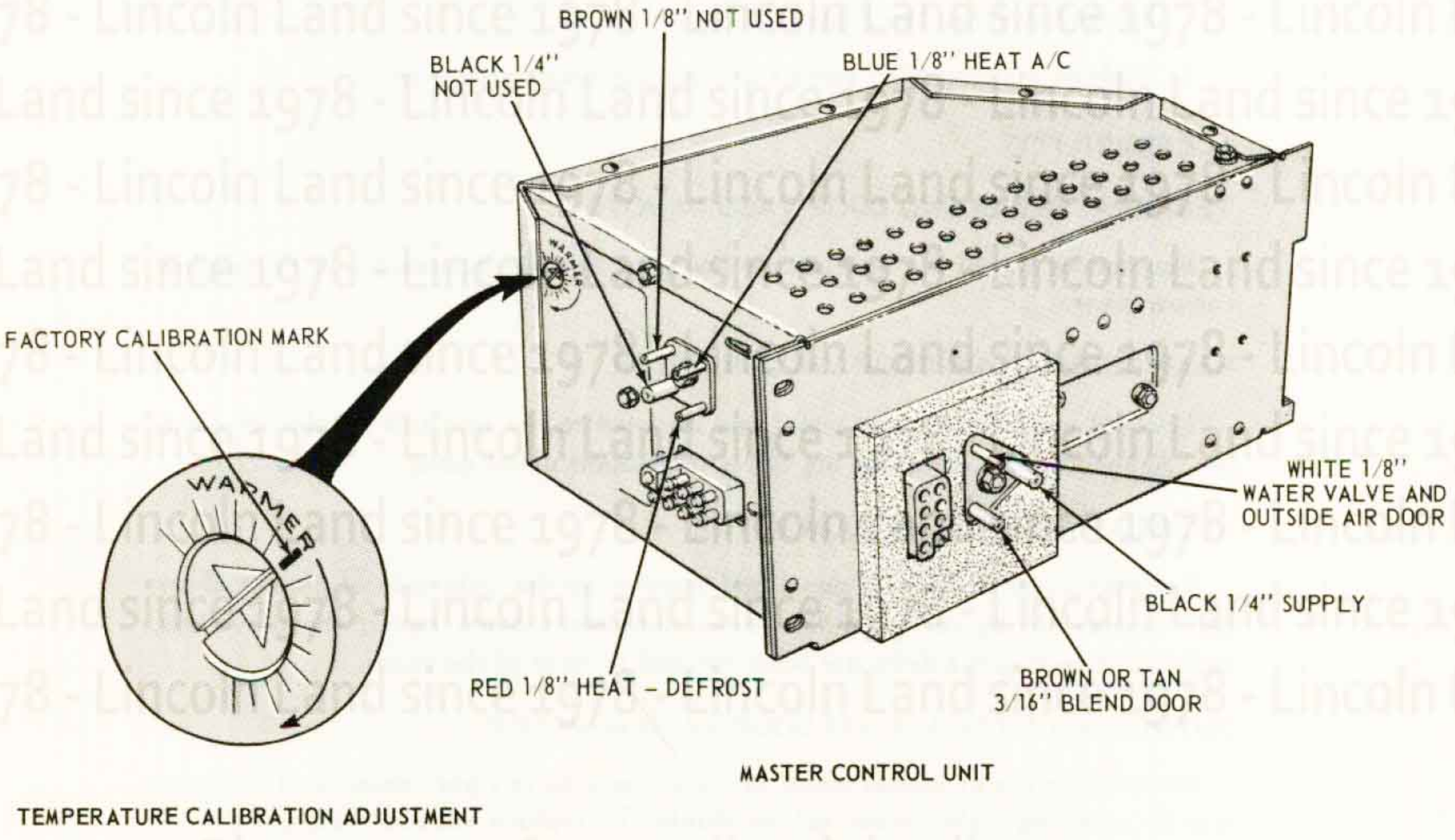

Fig. 14 – Automatic Temperature Control Vacuum System (Passenger Compartment)

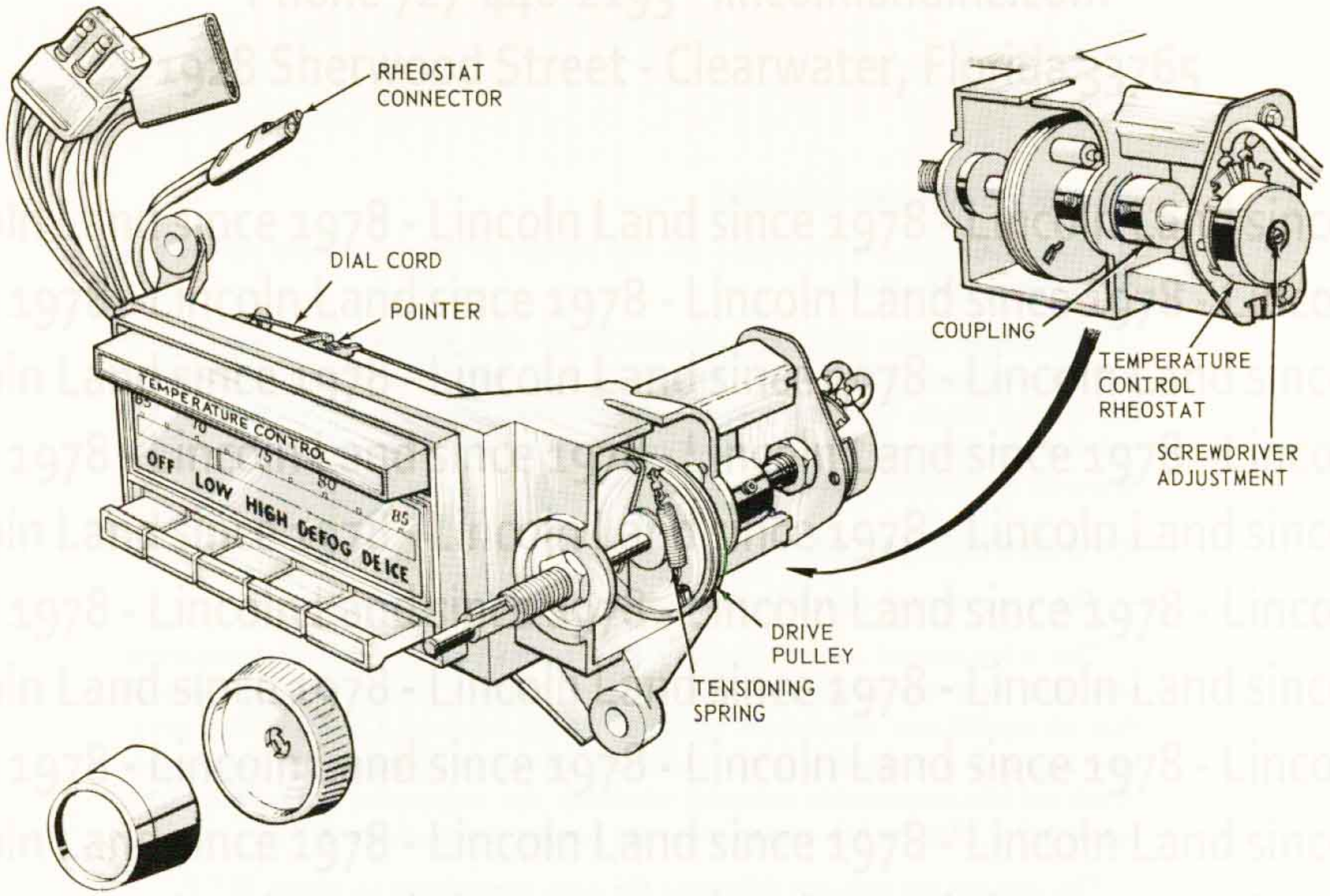

Fig. 21 – Automatic Temperature Instrument Panel Control – Front View

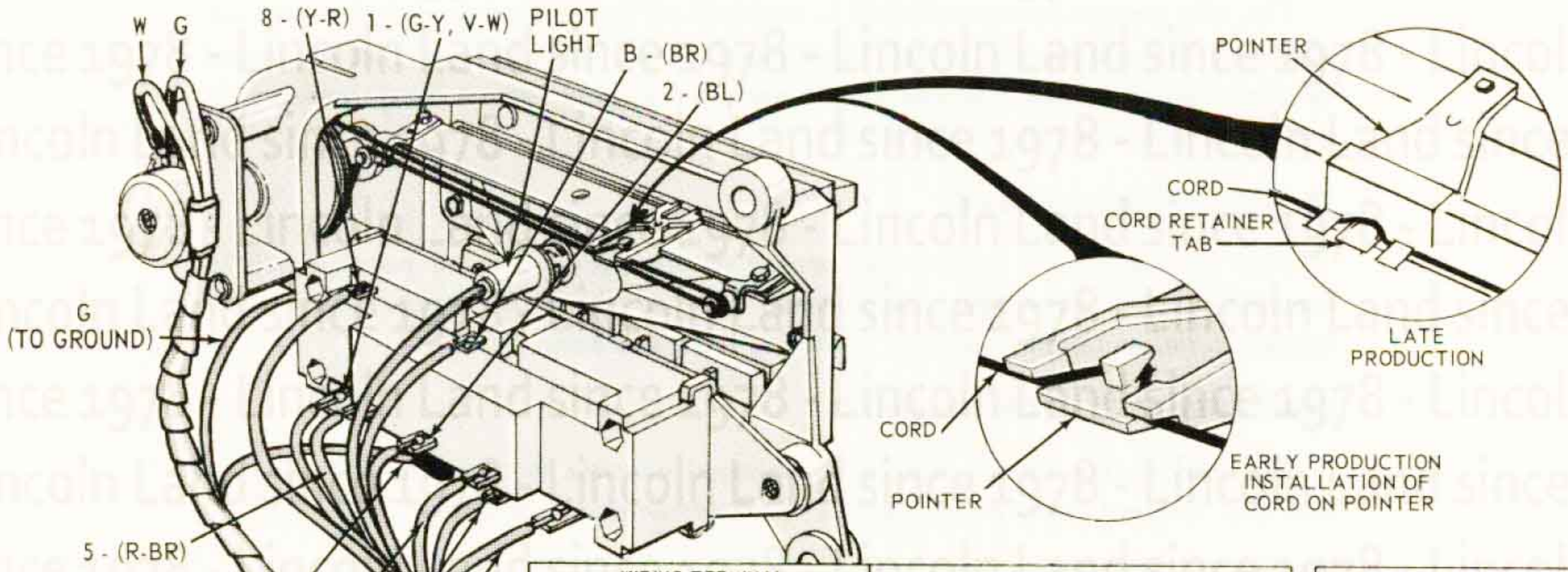

WIRING TERMINAL		CIRCUIT
NO.	COLOR OF WIRE	
•1	GREEN-YELLOW STRIPE	TO ICING SWITCH & MASTER CONTROL UNIT
1	VIOLET-WHITE STRIPE	TO BLOWER MOTOR RESISTOR
•2	BLUE	TO MASTER CONTROL UNIT
•3	GREEN	TO MASTER CONTROL UNIT
•4	RED-WHITE STRIPE	TO MASTER CONTROL UNIT
•5	RED-BROWN STRIPE	TO OUTSIDE AIR DOOR SOLENOID IN MASTER CONTROL UNIT
•6	WHITE-BLUE STRIPE	TO HEAT DEFROST SOLENOID IN MASTER CONTROL UNIT
7	ORANGE-BLACK STRIPE	TO BLOWER MOTOR
•8	YELLOW-RED STRIPE	TO MASTER CONTROL UNIT
B	BROWN	BATTERY FEED
PILOT LIGHT	BLUE-RED STRIPE	PILOT LIGHT FEED
W	WHITE	TO IN-CAR SENSOR
G	GREEN	TO GROUND

• These circuits go to Master Control Unit

PUSH BUTTON SWITCH CONTINUITY CONNECTIONS AT MULTIPLE CONNECTOR	
POSITION	TERMINALS
OFF	NONE
LOW	[B,1,2] [5,8]
HIGH	[B,1,2,4] [5,8]
DEFOG	[B,1,4,5,6]
DEICE	[B,1,3,5,6,7]

NOTE: Box indicates terminals connected together when push button is depressed.

Fig. 22 – Automatic Temperature Instrument Panel Control – Rear View

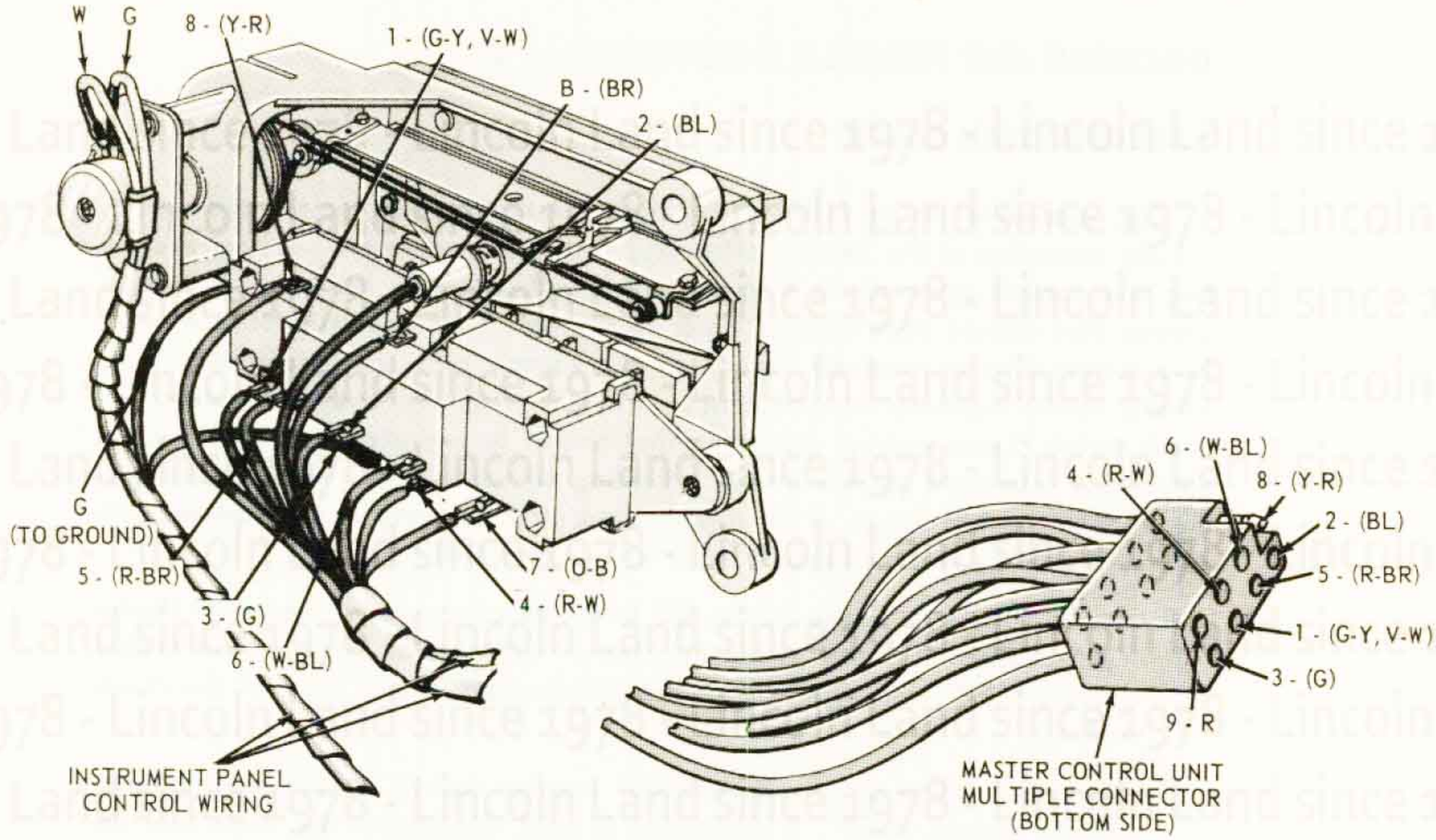

Fig. 23 – Automatic Temperature Instrument Panel Control Rear View

WIRING TERMINAL		CIRCUIT
NO.	COLOR OF WIRE	
●1	GREEN-YELLOW STRIPE	TO ICING SWITCH & MASTER CONTROL UNIT
1	VIOLET-WHITE STRIPE	TO BLOWER MOTOR RESISTOR
●2	BLUE	TO MASTER CONTROL UNIT
●3	GREEN	TO MASTER CONTROL UNIT
●4	RED-WHITE STRIPE	TO MASTER CONTROL UNIT
●5	RED-BROWN STRIPE	TO OUTSIDE AIR DOOR SOLENOID IN MASTER CONTROL UNIT
●6	WHITE-BLUE STRIPE	TO HEAT DEFROST SOLENOID IN MASTER CONTROL UNIT
7	ORANGE-BLACK STRIPE	TO BLOWER MOTOR
●8	YELLOW-RED STRIPE	TO MASTER CONTROL UNIT
B	BROWN	BATTERY FEED
PILOT LIGHT	BLUE-RED STRIPE	PILOT LIGHT FEED
W	WHITE	TO IN-CAR SENSOR
G	GREEN	TO GROUND

● These circuits go to Master Control Unit

PUSH BUTTON SWITCH CONTINUITY CONNECTIONS AT MULTIPLE CONNECTOR	
POSITION	TERMINALS
OFF	NONE
LOW	1-2 [5-8]
HIGH	1-2-4 [5-8]
DEFOG	1-4-5-6
DEICE	1-3-5-6

NOTE: Box indicates terminals connected together when push button is depressed. Terminals 5 & 8 are a separate circuit.

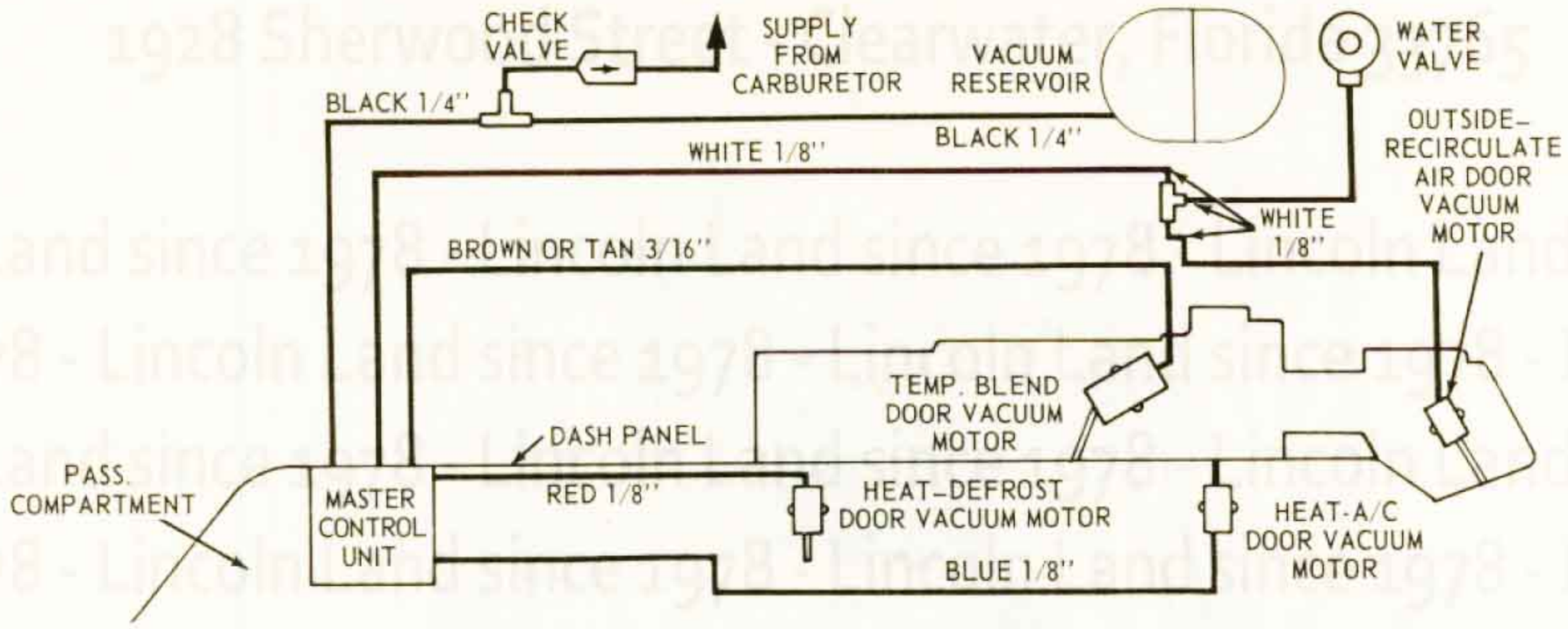

Fig. 11 – Automatic Temperature Control Vacuum Schematic

PUSH BUTTON SELECTION	TEMPERATURE BLEND DOOR		A/C-HEAT DOOR		HEAT-DEFROST DOOR		OUTSIDE-RECIRC AIR DOOR		HEATER WATER VALVE	
	Position	Vac ("Hg) 1	Position	Vac ("Hg)	Position	Vac ("Hg)	Position	Vac ("Hg)	Position	Vac ("Hg)
Off	Stays in Last Used Setting	(0 to 12+)	Heat	0	Heat	0	Recirc	0	Off	0
Low	Max. Cool	0–6	A/C	12+	Heat	0	Outside	12+	On	12+
	Temp. Control Range	6–12	A/C ②	12+	Heat	0	Outside	12+	On	12+
			Heat ②	0	Heat	0	Outside ③	12+ ③	On ③	12+ ③
	Max. Heat	12+	Heat	0	Heat	0	Outside ③	12+ ③	On ③	12+ ③
High	Max. Cool (Recirc)	0–5½	A/C	12+	Heat	0	Recirc	0	Off	0
	Max. Cool (Outside)	5½–6	A/C	12+	Heat	0	Outside	12+	On	12+
	Temp. Control Range	6–12	A/C ②	12+	Heat	0	Outside	12+	On	12+
			Heat ②	0	Heat	0	Outside ③	12+ ③	On ③	12+ ③
	Max. Heat	12+	Heat	0	Heat	0	Outside ③	12+ ③	On ③	12+ ③
Defog	Max. Cool	0–6	Heat	0	Defrost	12+	Outside	12+	On	12+
	Temp. Control Range	6–12								
	Max. Heat	12+								
Deice	Max. Heat	12+	Heat	0	Defrost	12+	Outside	12+	On	12+

① Vacuum figures are for vacuum increasing from 0" Hg. to 12+" Hg. With vacuum decreasing from 12+ Hg. to 0" Hg., subtract ½" Hg. from vacuum figures listed.

② A/C – HEAT DOOR changes from A/C to HEAT when TEMPERATURE BLEND DOOR reaches 8-¾" Hg. vacuum.

③ Same as OFF push button selection if engine coolant is below 115° F.

Max. = Maximum ★ A/C = Air Conditioning ★ Vac ("Hg) = Vacuum in inches of mercury

Min. = Minimum ★ Recirc. = Recirculate

Fig. 12 – Automatic Temperature Control Vacuum System Operating Conditions

Phone 727-446-2193 - lincolnlandinc.com
1928 Sherwood Street - Clearwater, Florida 33765

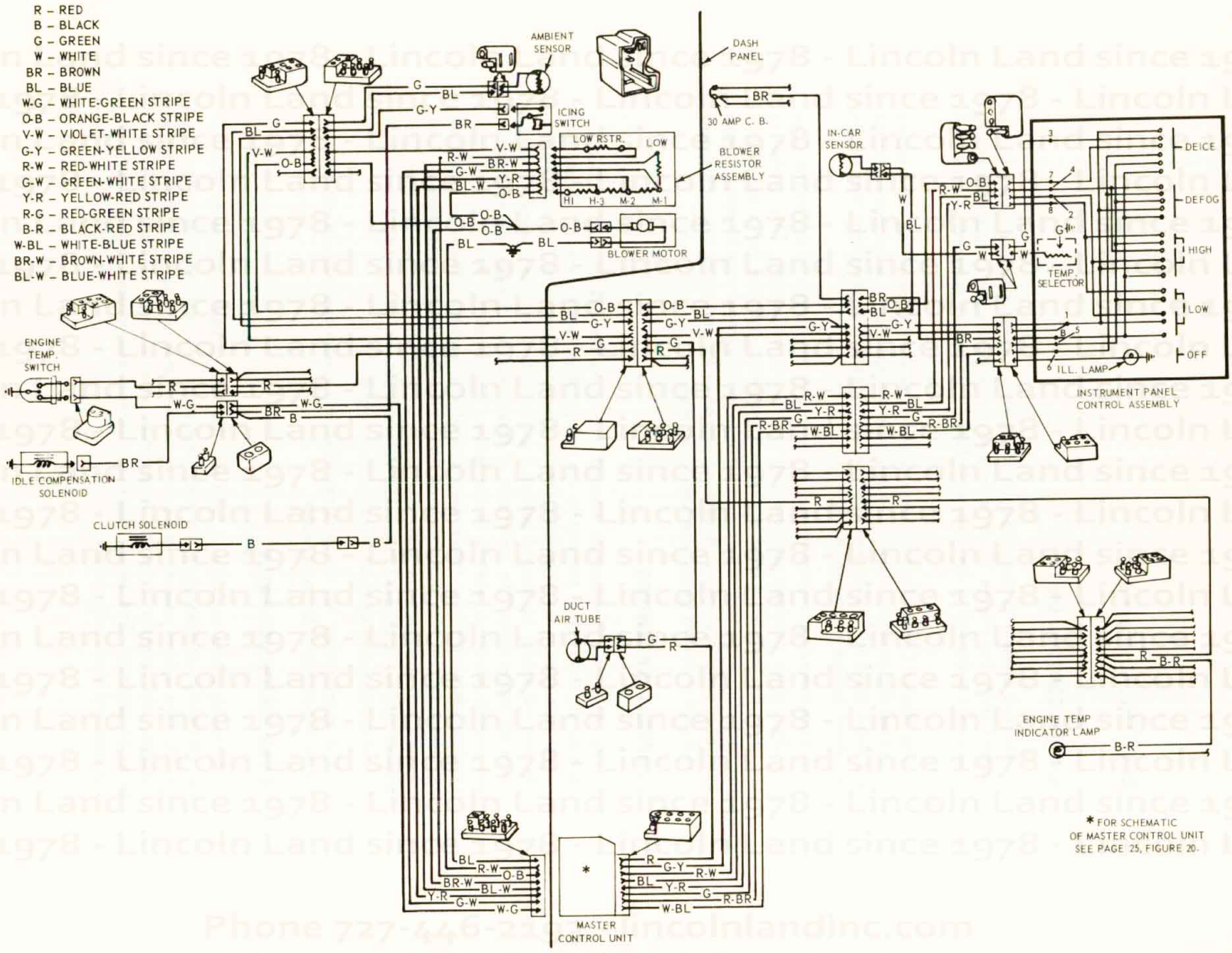

Fig. 18 – Automatic Temperature Control Wiring Diagram

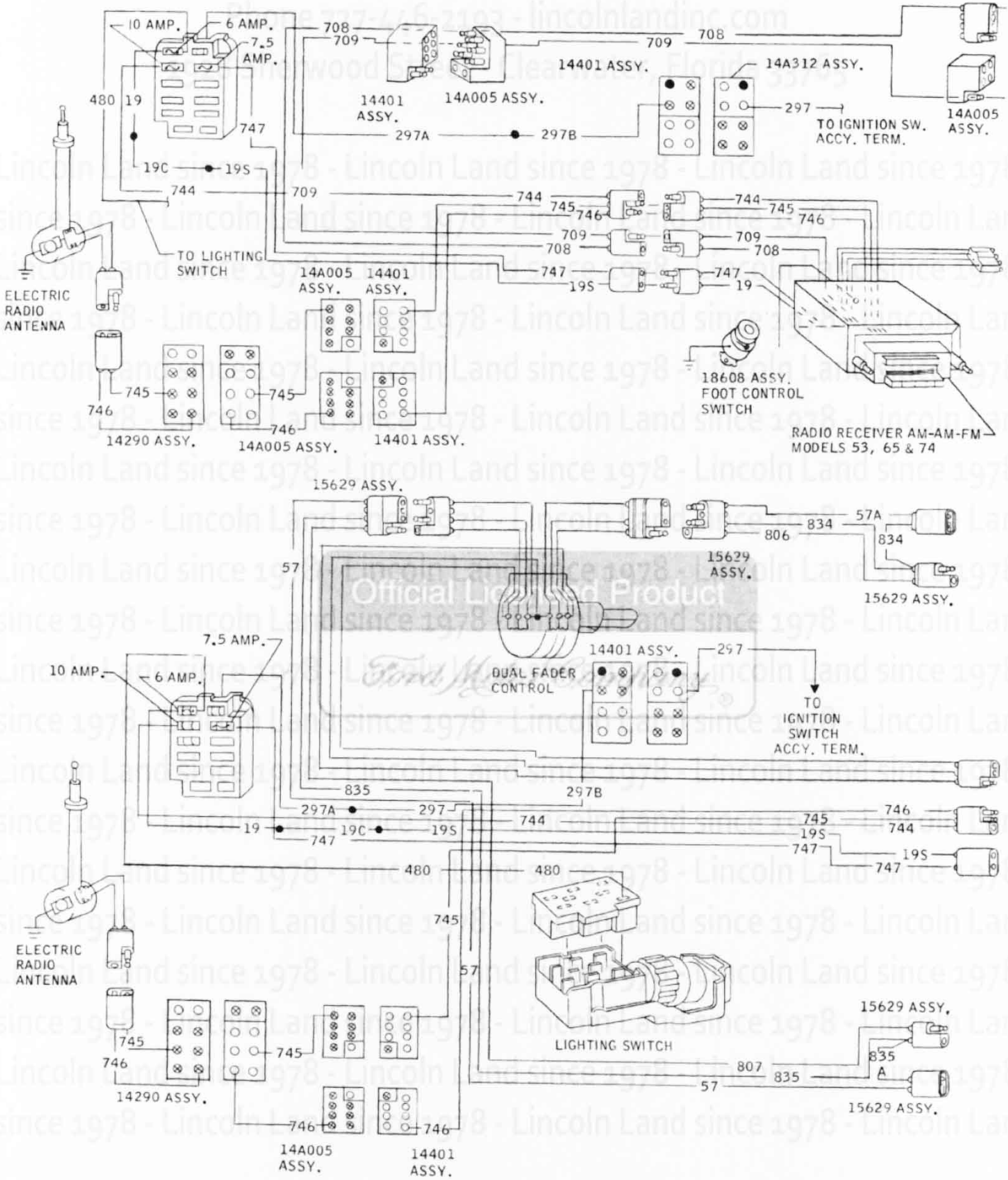

K 1763-B1

FIG. 17—Radio, Speakers and Stereo Tape Player

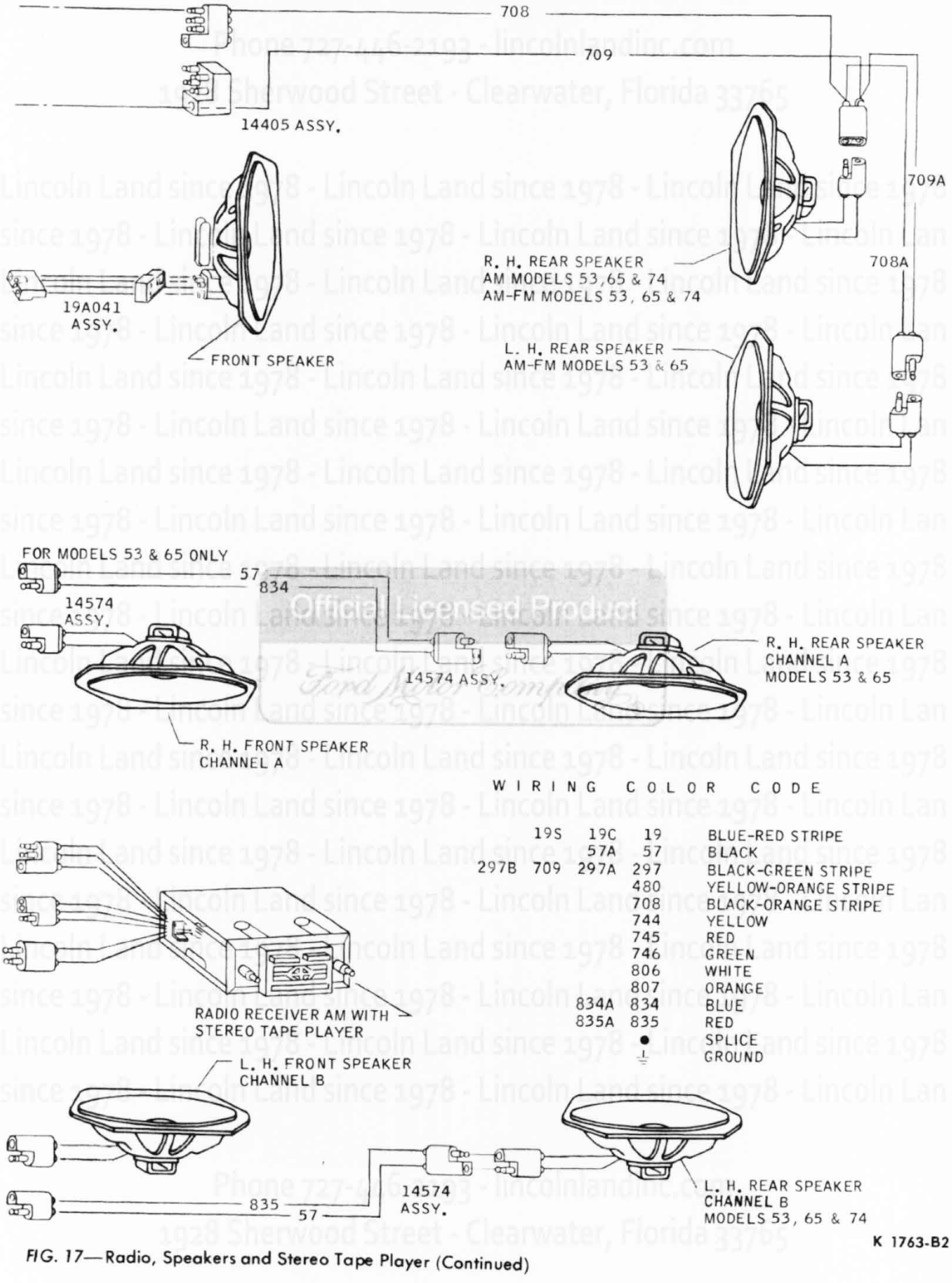

WIRING COLOR CODE

	19S	19C	19	BLUE-RED STRIPE
		57A	57	BLACK
297B	709	297A	297	BLACK-GREEN STRIPE
			480	YELLOW-ORANGE STRIPE
			708	BLACK-ORANGE STRIPE
			744	YELLOW
			745	RED
			746	GREEN
			806	WHITE
			807	ORANGE
		834A	834	BLUE
		835A	835	RED
			●	SPLICE
			⏚	GROUND

K 1763-B2

FIG. 17—Radio, Speakers and Stereo Tape Player (Continued)

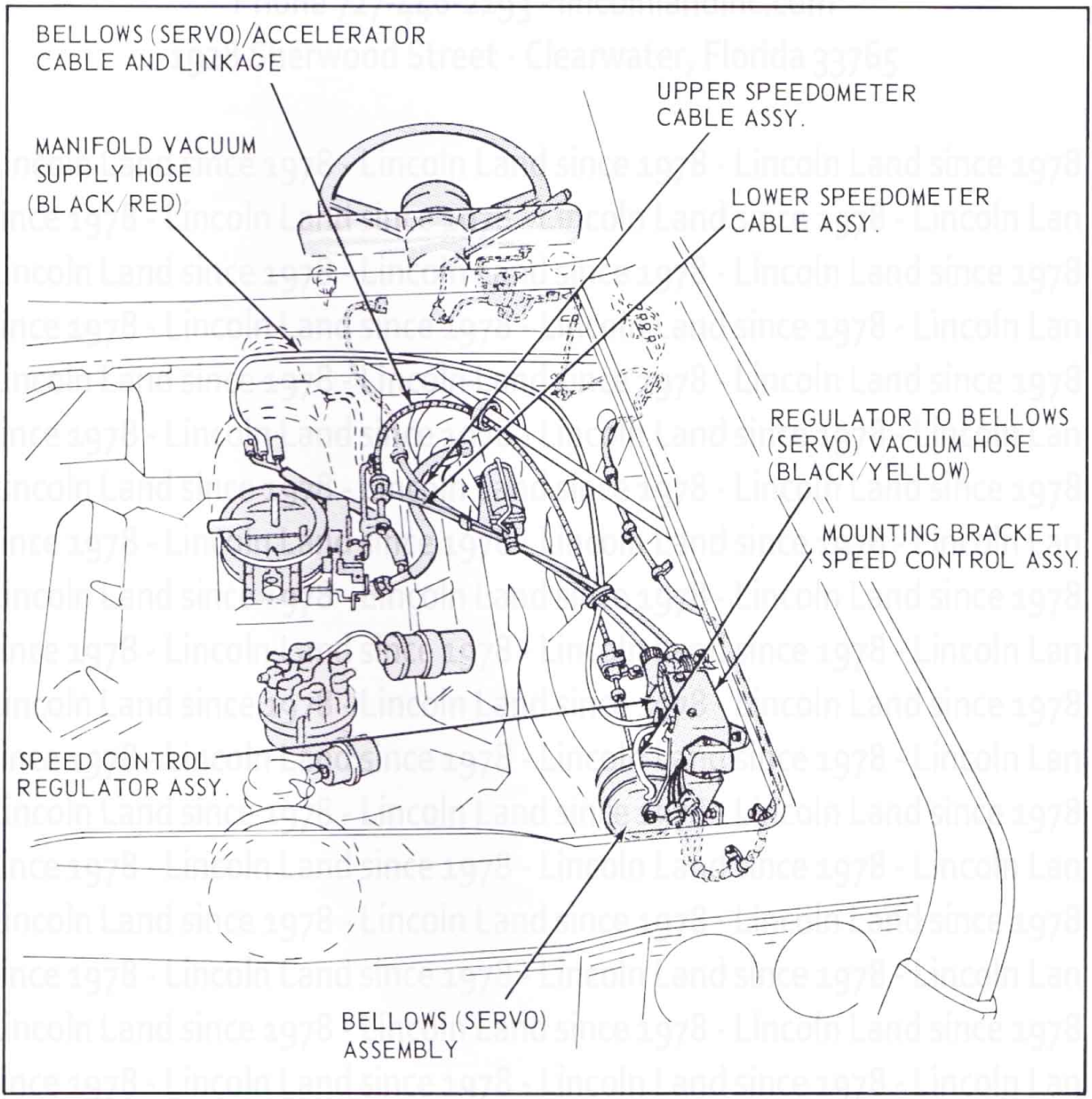

Fig. 5 – 1967 Lincoln Continental Speed Control – Engine Compartment Installation

Phone 727-446-2193 - lincolnlandinc.com
1928 Sherwood Street - Clearwater, Florida 33765

UM SYSTEM HOSE ROUTING CHART

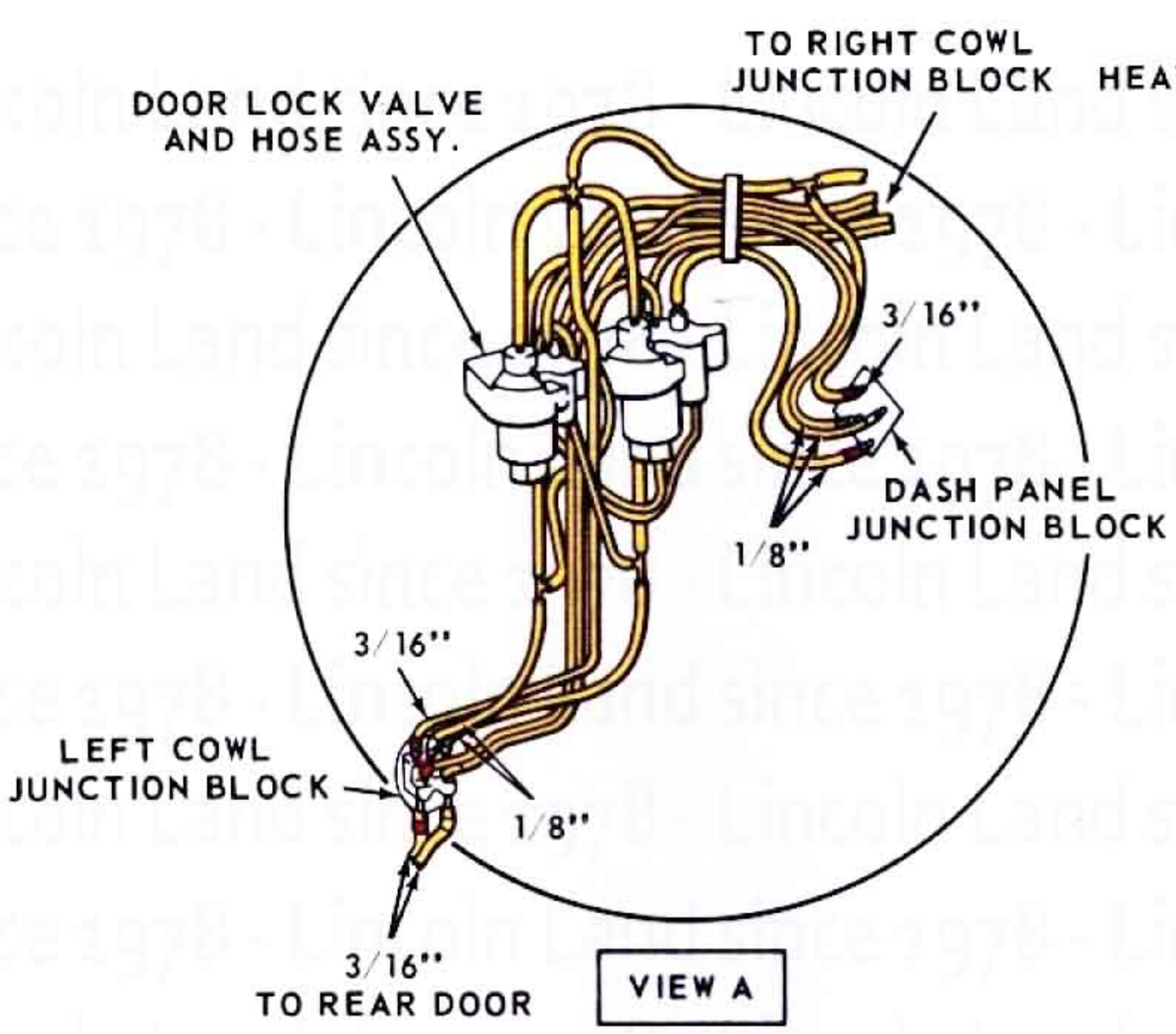

VIEW A

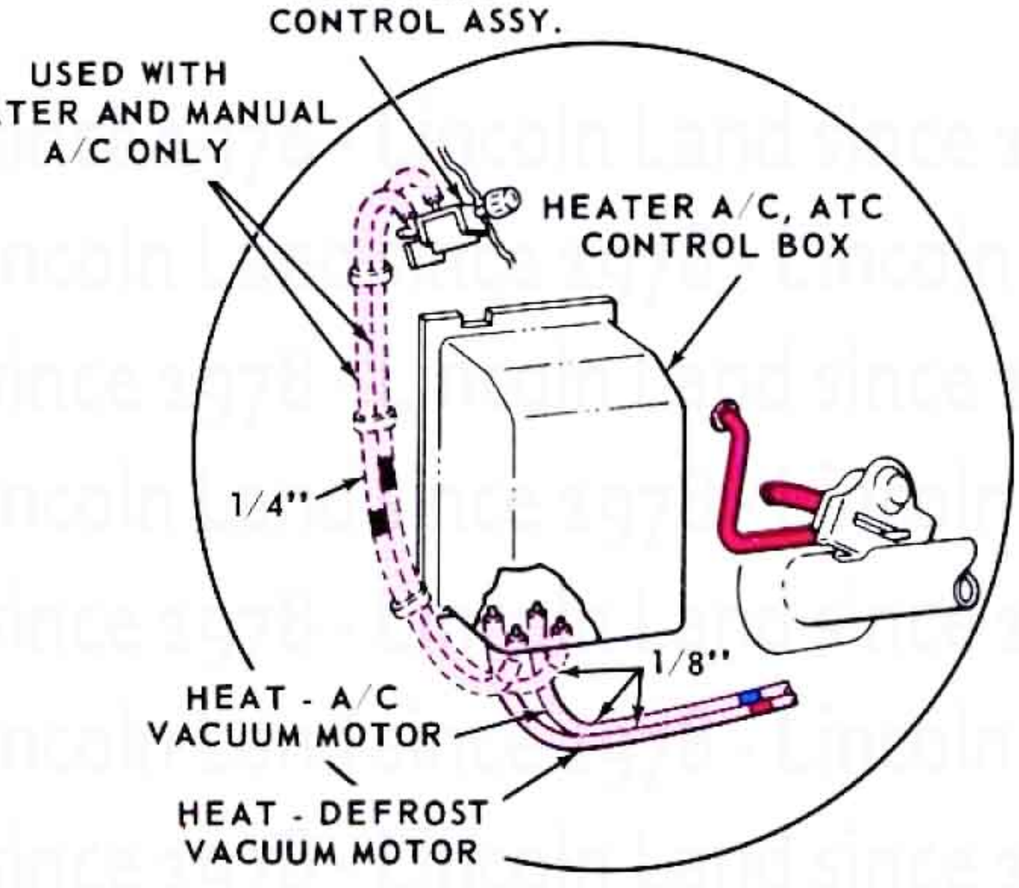

VIEW B

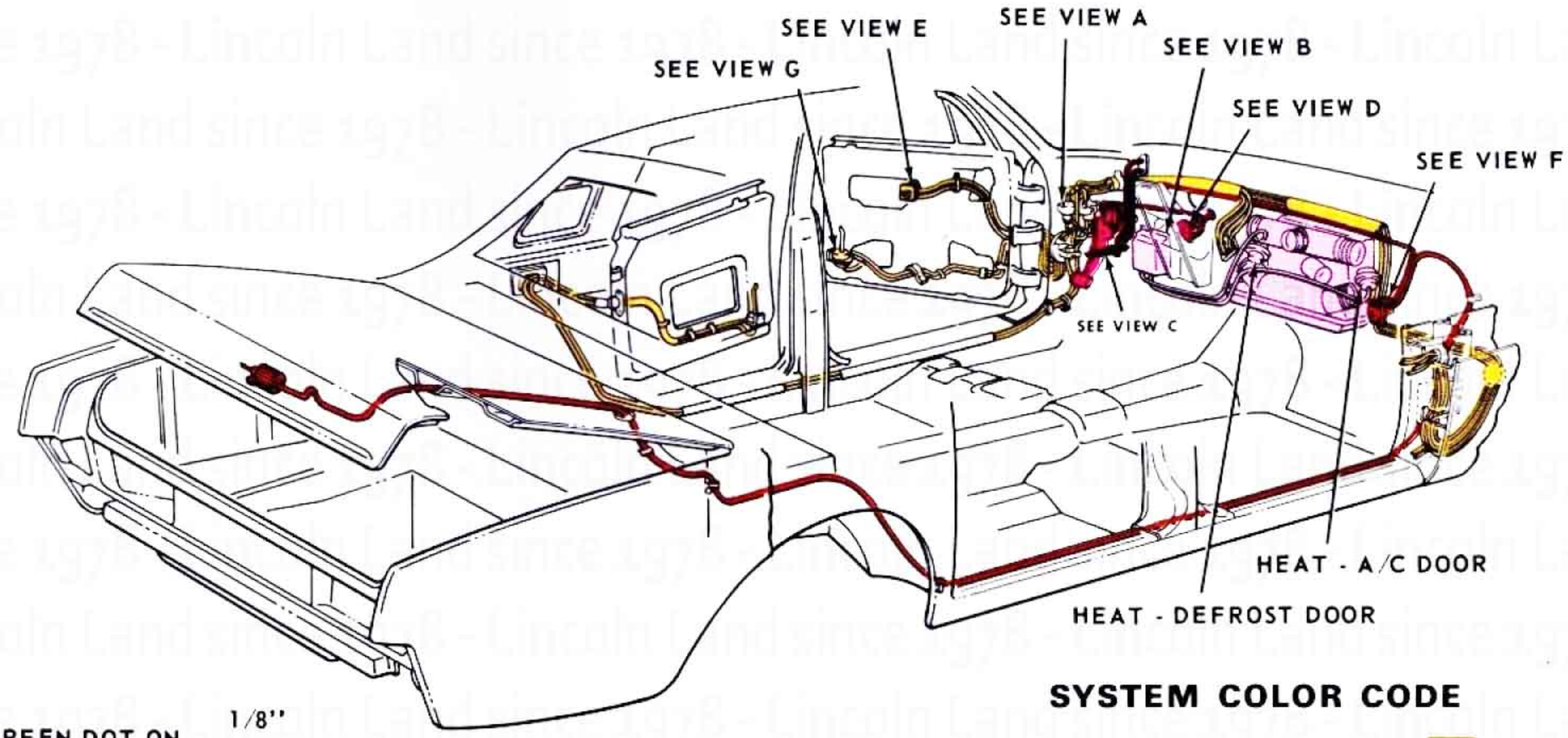

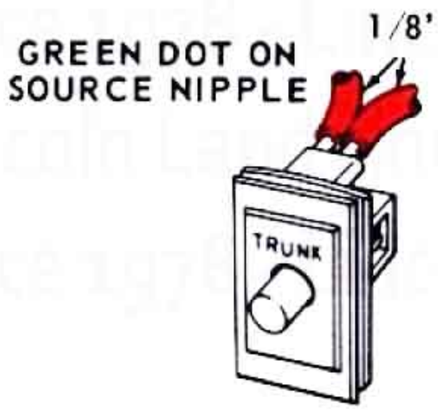

VIEW F

DECK LID RELEASE SWITCH

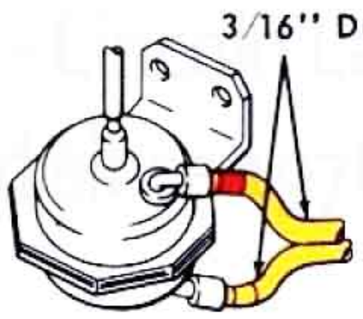

VIEW G

DOOR LOCK MOTOR

SYSTEM COLOR CODE

- VACUUM DOOR LOCKS
- HEATER - A/C - ATC
- VACUUM DECK LID
- WINDSHIELD WIPER/WASHER (AND DOOR LOCK VACUUM SUPPLY)
- VACUUM EMERGENCY BRAKE RELEASE
- THERMACTOR
- SPEED CONTROL
- VACUUM DISTRIBUTOR ADVANCE
- VACUUM SUPPLY
- AUTOMATIC TRANSMISSION SHIFT LINE
- VACUUM POWER BRAKE ASSIST

1967 LINCOLN CONTINENTAL VACU

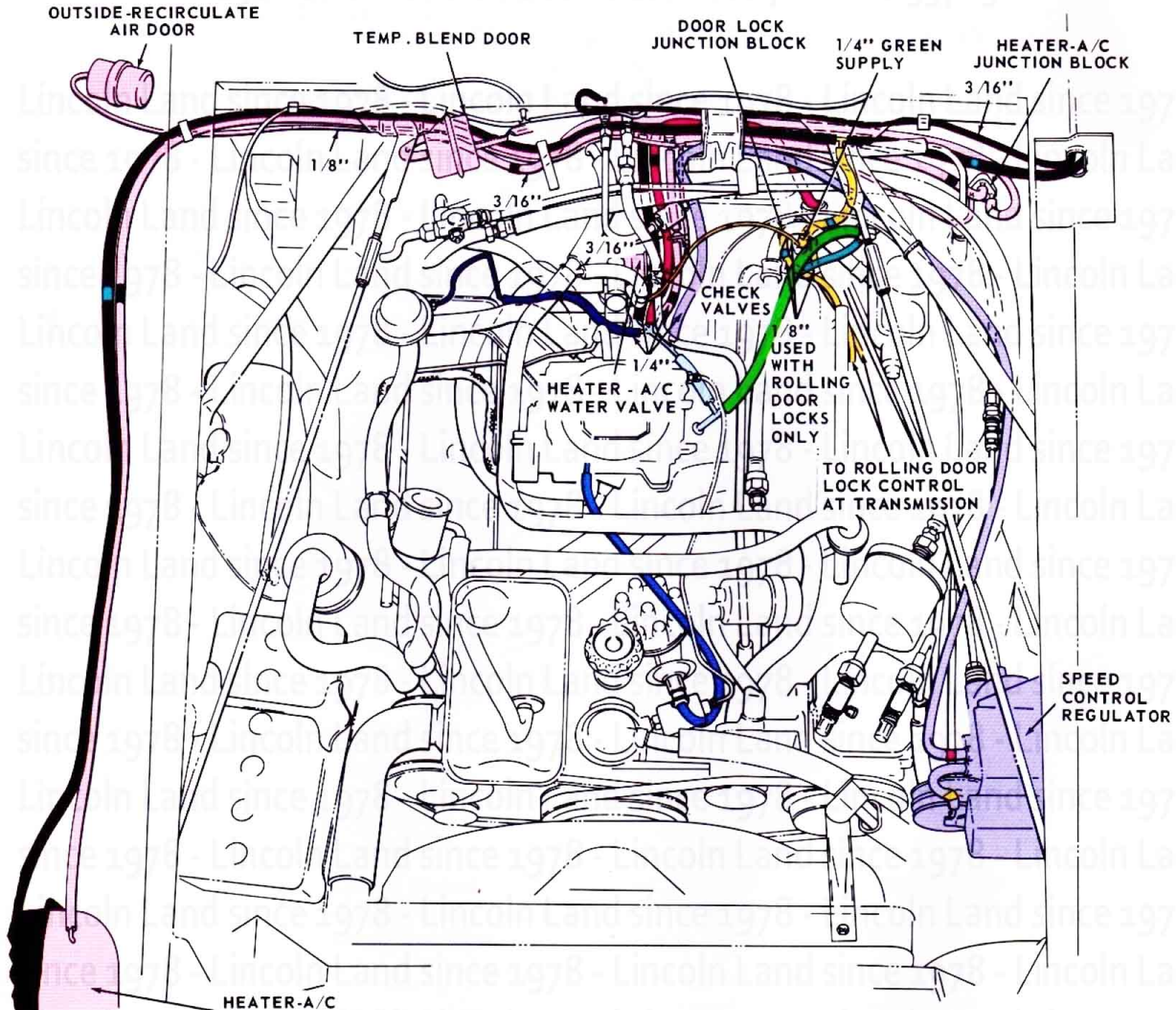

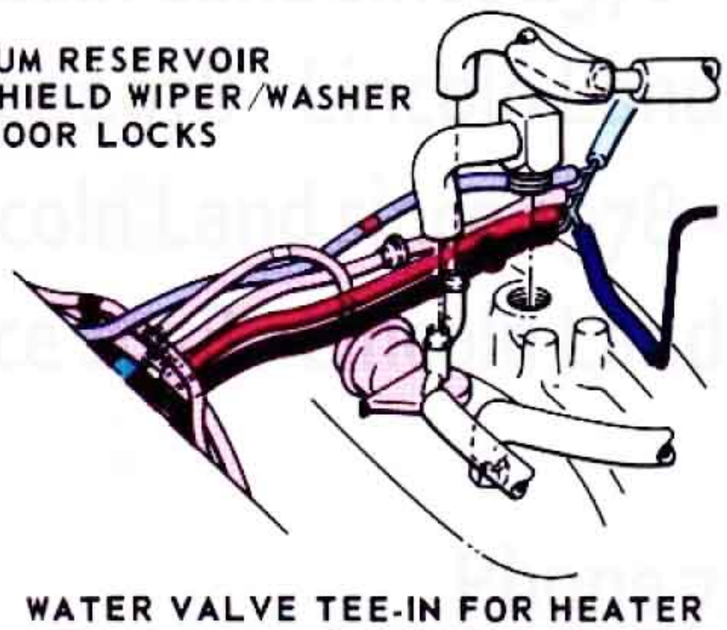

WATER VALVE TEE-IN FOR HEATER AND MANUAL A/C TEE-IN FOR ATC SHOWN IN ENGINE COMPARTMENT VIEW

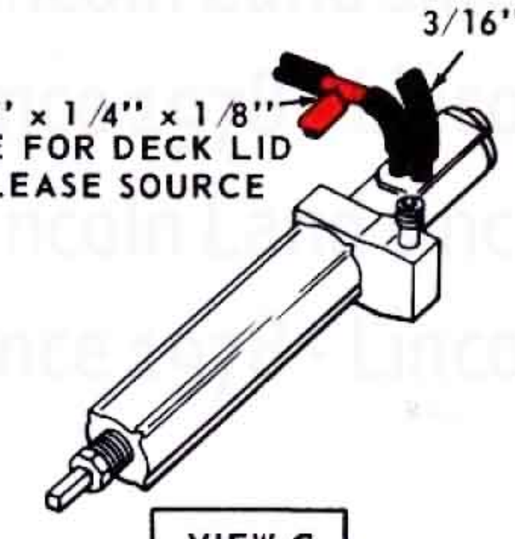

VIEW C

WINDSHIELD WIPER/WASHER SWITCH

VIEW D

STEERING COLUMN NEUTRAL SWITCH

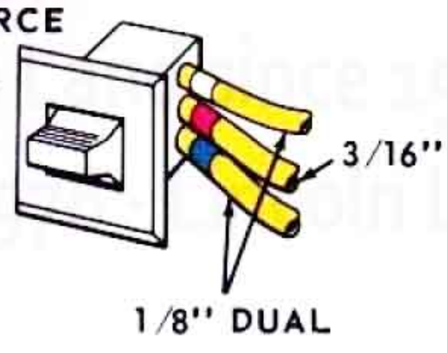

VIEW E

DOOR LOCK MANUAL SWITCH

Phone 727-446-2193 - lincolnlandinc.com
1928 Sherwood Street - Clearwater, Florida 33765
Lincoln Land since 1978 - Lincoln Land since 1978 - Lincoln Land since 1978

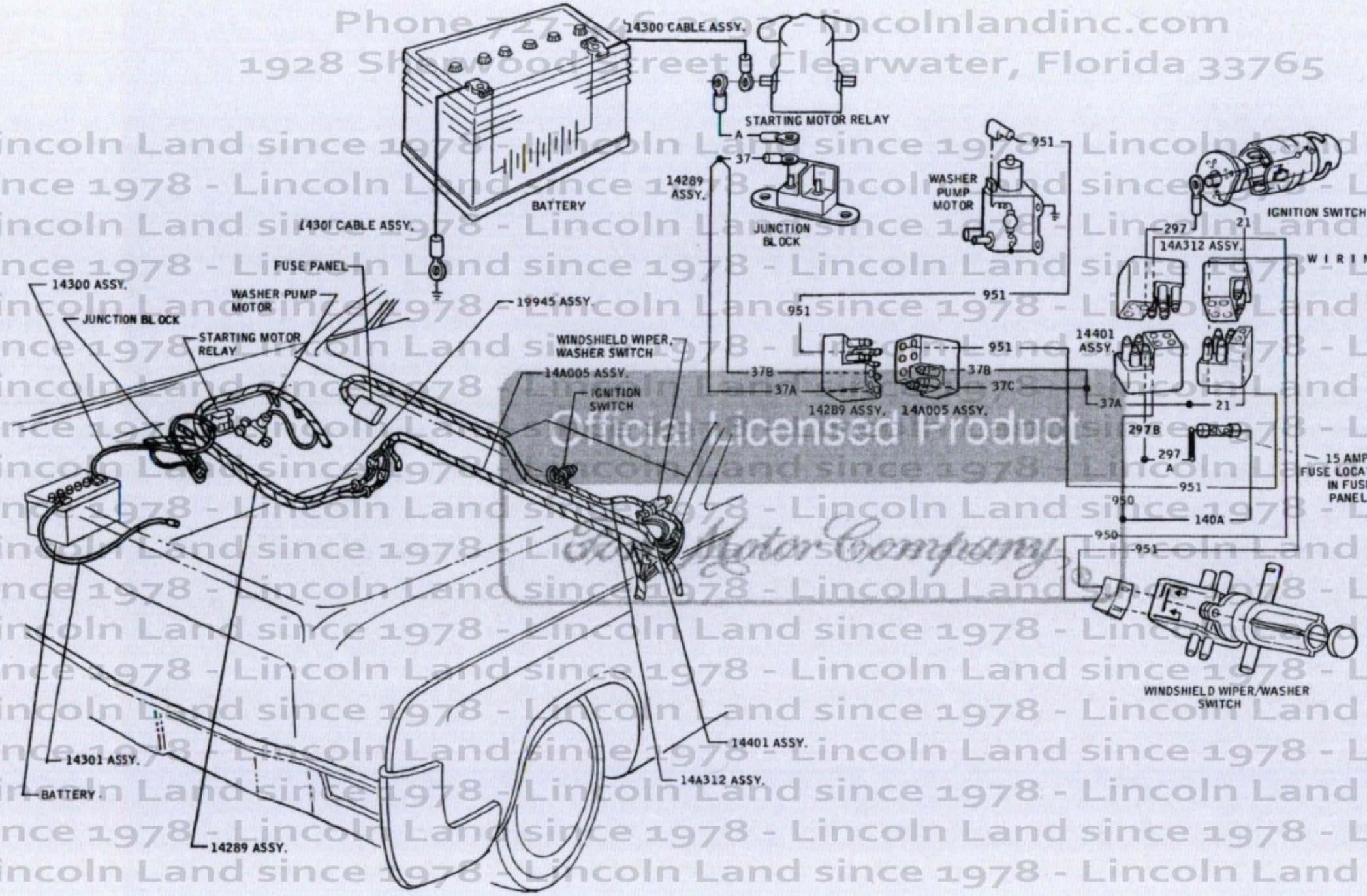

Official Licensed Product
Ford Motor Company

Phone 727-446-2193 - lincolnlandinc.com
1928 Sherwood Street - Clearwater, Florida 33765

K 1756-B

FIG. 24— Windshield Washers