Operation no. of operation texts and work units
or standard texts and flat rates 80-0020

1st version except (D) as of 03/94 and vehicles with code 885

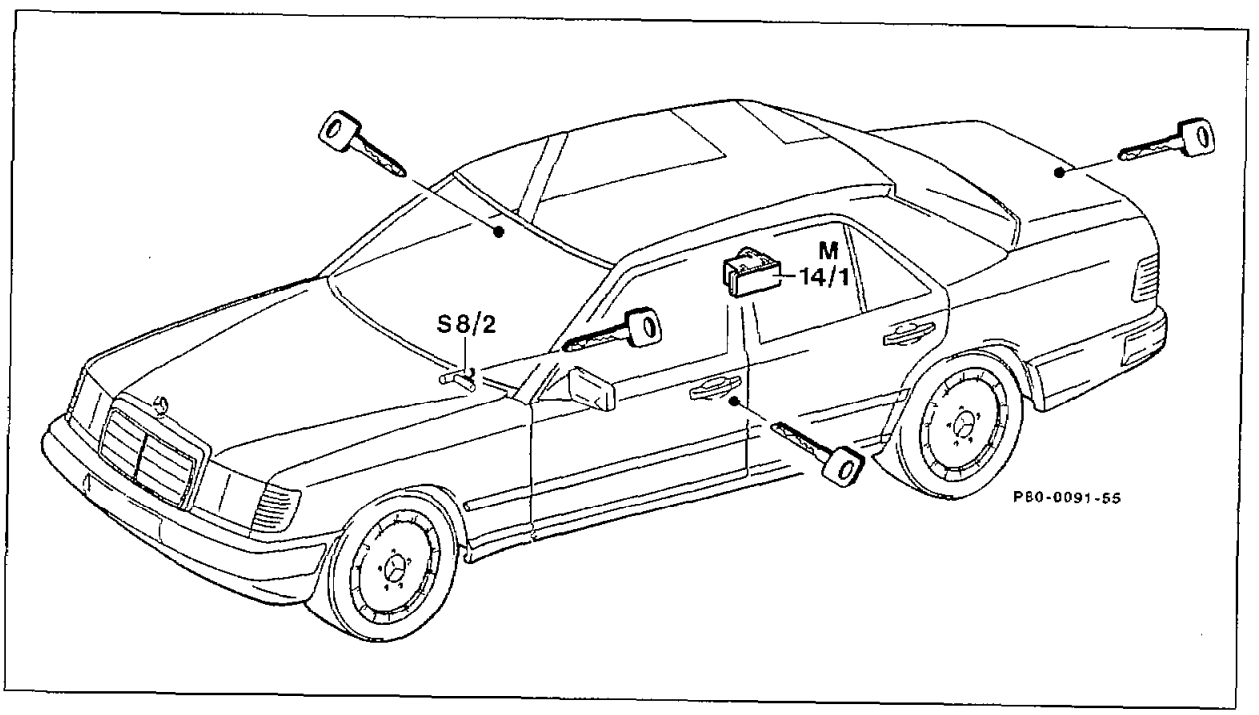

Unlock and lock left, right front door and trunk lid or tailgate.
Listen for correct operation of supply pump.
All doors, trunk lid or tailgate and fuel filler flap must lock or unlock in ≤3 s.

If actuators do not lock or unlock and supply pump (M14/1) does not operate:	If actuators do not lock or unlock although supply pump (M14/1) operates:
↓	↓
80–104 Check electrical function of central locking system.	80–108 Check pneumatic function of supply pump.
↓	↓
80–112 Check electrical function of actuator.	80–120 Check central locking system for leaks.
	↓
	80–116 Check pneumatic function of actuator.

Following repairs, additionally check!

Setting of actuator . . . . . .

Lock left and right front doors with key and keep a watch on locking buttons on the other doors. After locking button has moved 6 – 8.5 mm, the central locking system must lock the car. Remove and install actuator if necessary, set (80–215).

Lock on right front door to prevent inadvertent locking out . . . . . .

Move key in steering lock position 1 or 2 and press locking button on right (left for RHD) front door through the opened window. Central locking system must now not lock car. Renew lighting/central locking system warning buzzer contact (S8/2), if necessary (46–640).

Note

As of the introduction of new features in 09/89 up to approx. the middle of 09/89, the anti lock-out device is rendered inoperative on models 124 sedan and coupé with tilting/sliding roof and/or electric power windows.

⚠

Note microfilm "Up-to-date trouble diagnosis" or "Trouble diagnosis".

Note

After completing the repair work and prior to function test, disconnect ground cable to the battery for approx. 10 s to neutralize fault-current detection of the supply pump.

2nd version for (D) only as of 03/94 and vehicles with code 885

See diagnosis manual

Preceding operation:
Checking function of central locking system (80-090)

Operation no. of operation texts and work units
or standard texts and flat rates 80-0025

1st version except (D) as of 03/94 and vehicles with code 885

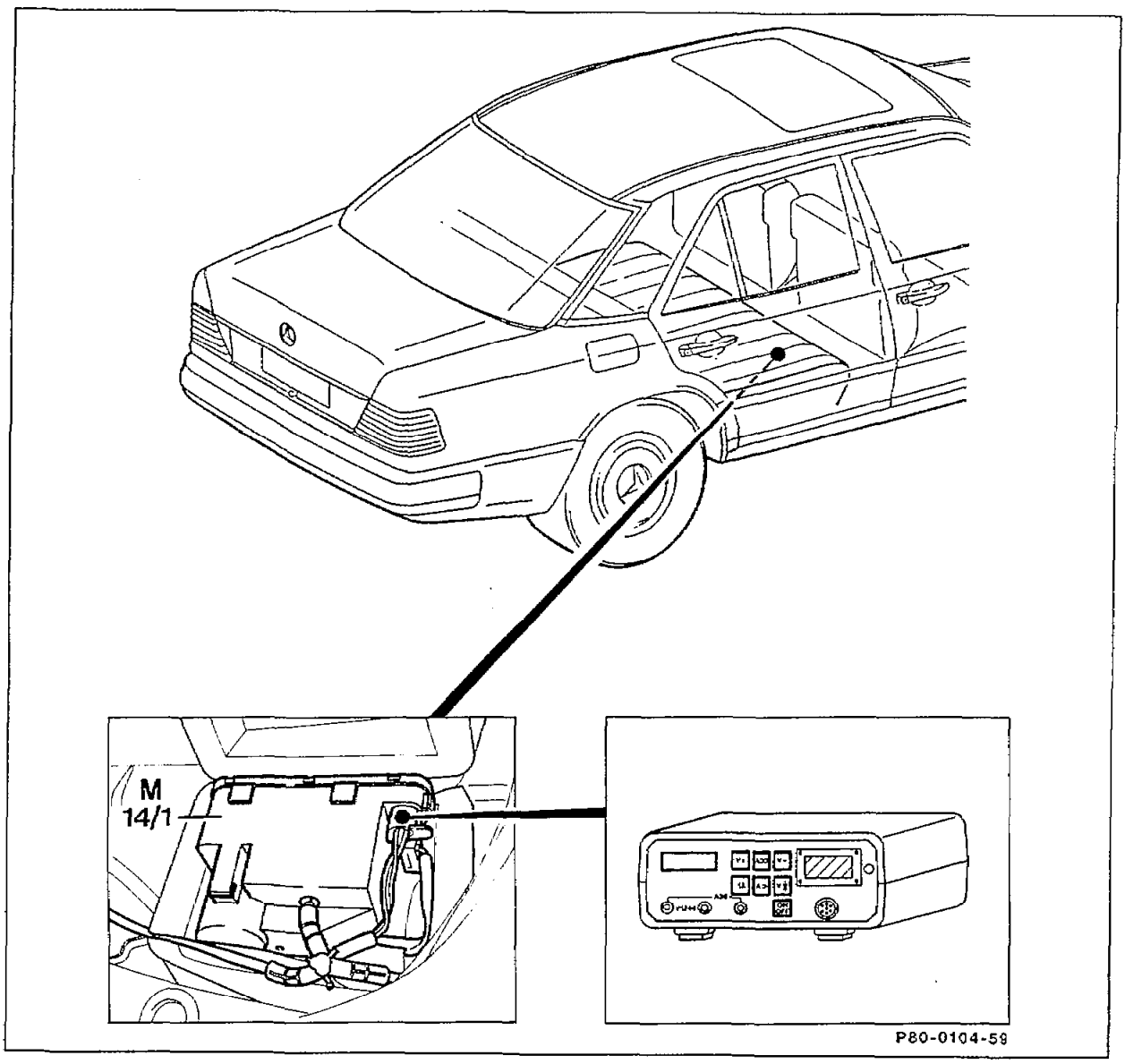

Prepare tests	Steps 1 – 6
Check power supply of supply pump	Battery voltage (>10 V)

Check control voltage when car unlocked	Battery voltage (>10 V).
Check control voltage when car locked	Battery voltage (>10 V).
Check contacts of connectors at supply pump	according to findings: rectify contact fault or replace supply pump.

Commercial tester

Digital multimeter	e. g. Sun, DMM-5

⚠
On cars fitted with **anti-theft alarm**, detach intermediate plug of anti-theft harness at connector (M14/1x2) or (M14/2x2) and connect central locking system harness direct to supply pump. Following this, once again check operation of central locking system. If system now operates, check anti-theft alarm.

Preparing test

1 Expose supply pump (M14/1) and remove from protective foam cap (80–270).

2 Check fuse for central locking system, refer to label in fuse cover.

3 Withdraw key from steering lock.

4 Close both front doors.

5 Detach connector (M14/1x1) of electric wiring harness at supply pump (M14/1).

6 Open connector housing and re-connect bushes without housing (brown lead = ground).

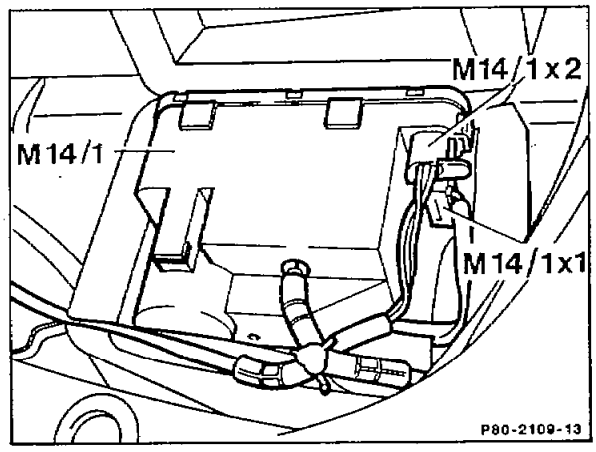

Test power supply of supply pump.

Connect digital multimeter as shown in illustration. Lock and unlock central locking system with key. Re-fit connector housing.

Specification: Battery voltage >10 V

yes	no

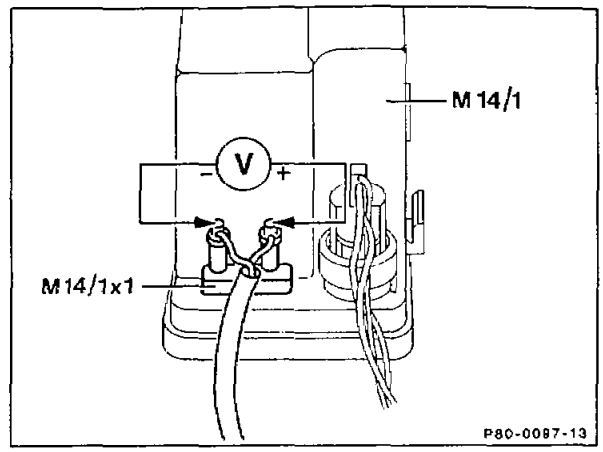

Test power supply according to wiring diagram (80-800).

Test control voltage with car unlocked.

Unlock central locking system at all 3 locking points with the key.
Connect digital multimeter to the two connectors of wiring harness as shown in ill. in turn in positions A, B and C (flat face of round connector downwards).

Specification in positions A, B and C: Battery voltage >10 V.

yes	no

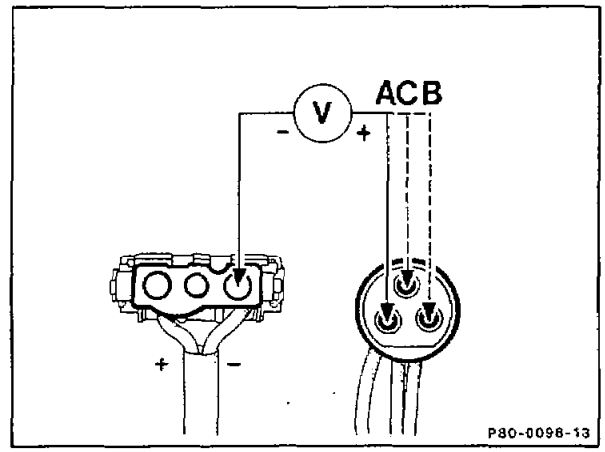

No battery voltage in position:
A Test right front door actuator (left for RHD) (80-112).
B Test left front door actuator (right for RHD) (80-112).
C Test trunk lid or tailgate actuator (80-112).
On Station Wagon, check contacts of connector of central locking system/trunk lock (X44/1) prior to test (refer to ill.).

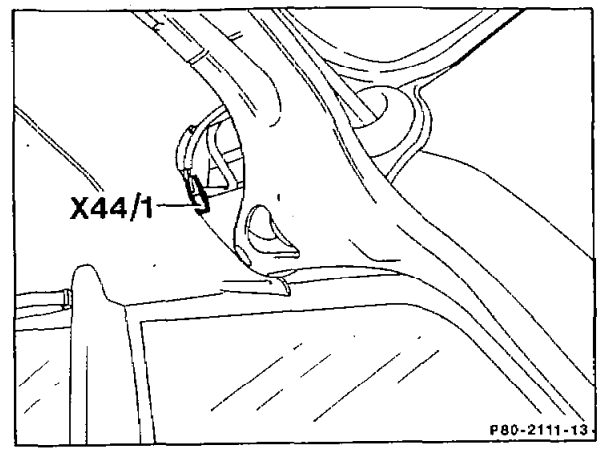

Test control voltage with car locked.

Lock central locking system at all 3 locking points with the key.
Connect digital multimeter to the two connectors of wiring harness as shown in ill. in turn in positions A, B and C (flat surface of round connectors downwards).

Specification in positions A, B and C:
Battery voltage > 10 V

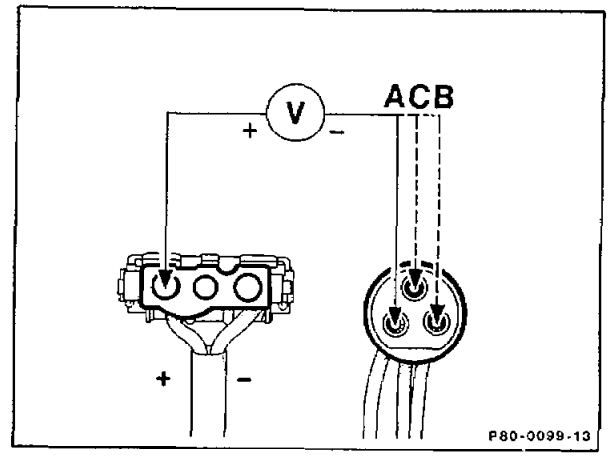

yes	no

No battery voltage in position:
A Test right front door actuator (left for RHD) (80–112).
B Test left front door actuator (right for RHD) (80–112).
C Test trunk lid or tailgate actuator (80–112).
On Station Wagon, check contacts of connector of central locking system/rear trunk lock (X44/1) prior to test (refer to ill.).

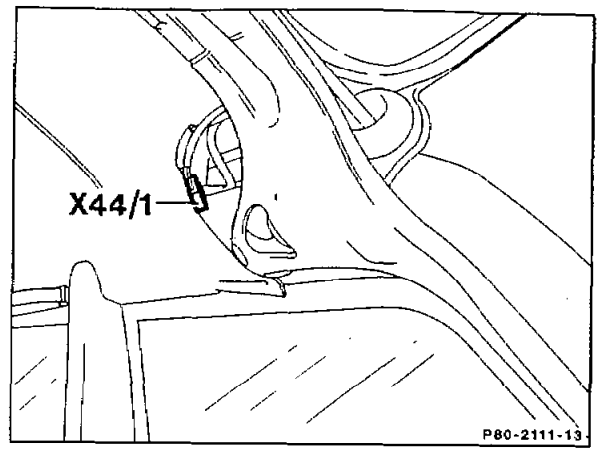

Check contacts of connectors at supply pump.

in order	not in order

Rectify contact fault.

Replace supply pump.
Note
Supply pumps with white and black cover are not interchangeable (refer to 80–010, Section D)

End of test

2nd version for (D) only as of 03/94 and vehicles with code 885

See diagnosis manual

80-108 Checking pneumatic function of supply pump

Preceding operation:
Checking function of central locking system (80-090)

Operation no. of operation texts and work units
or standard texts and flat rates 80-0030

1st version except (D) as of 03/94 and vehicles with code 885

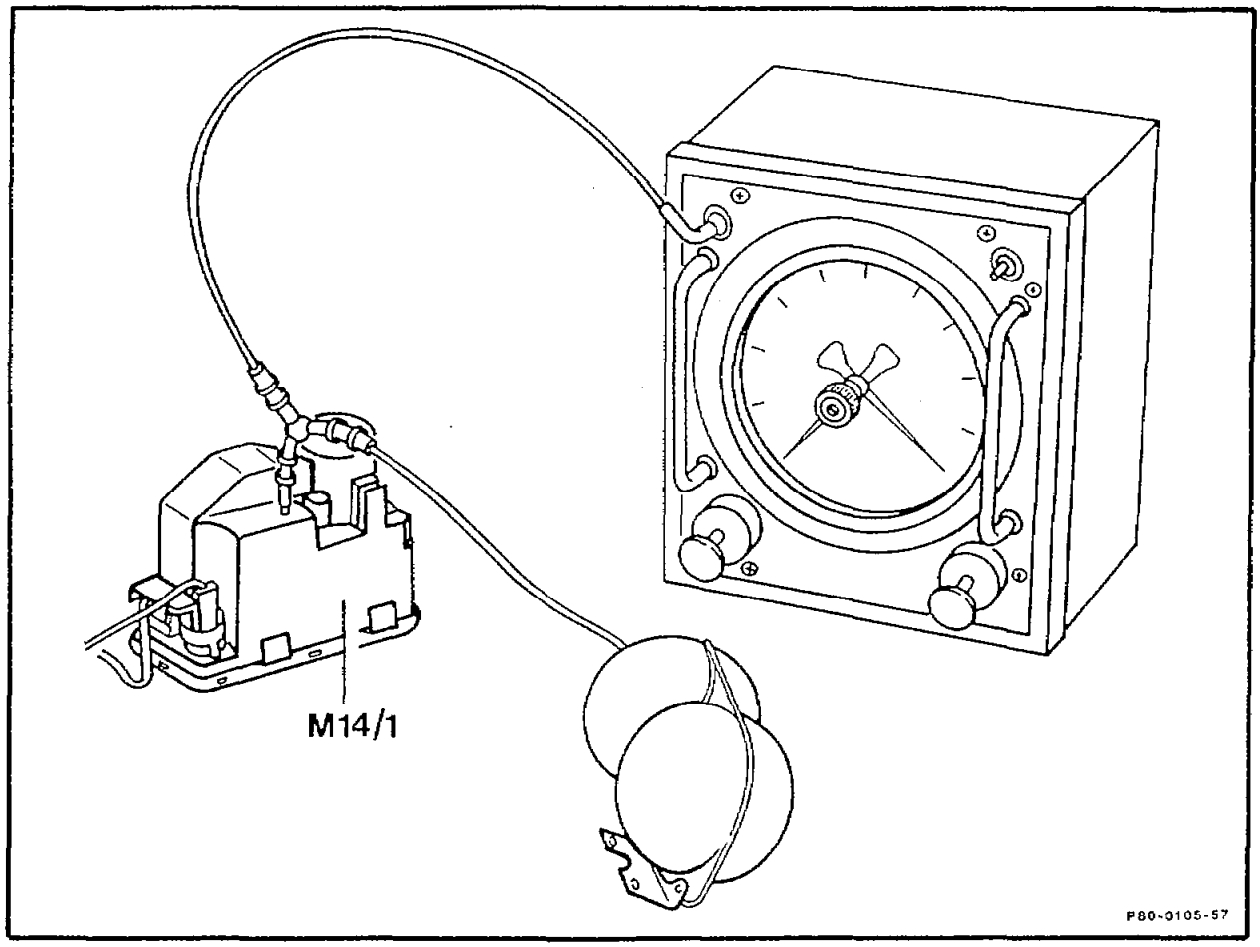

Prepare test	Steps 1 – 3
Check vacuum of supply pump when locking	>420 mbar in ≤3 s
Check pressure of supply pump when unlocking	>420 mbar in ≤3 s
Check safety switching time when disconnecting supply pump from line system	approx. 25 – 150 s

Special tool

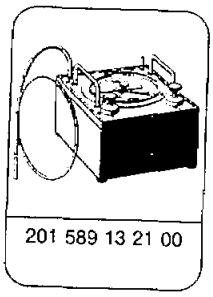

Parts for test

Container	107 800 08 19
Multiple connector	117 078 01 45
Sealing cap	000 987 11 45

Preparing test

1 Connect container with multiple connector to tester 201 589 13 21 00 at the vacuum end *(black connection)*.

2 Remove supply pump and detach pneumatic line (80–270).

3 Connect tester 201 589 13 21 00 with container to supply pump (M14/1).

Note

If supply pump fitted with pneumatic connection for orthopedic backrest, seal latter with cap Part No. 000 987 11 45.

Test

Testing vacuum of central locking system when locking car.

Lock central locking system with key and take reading of maximum vacuum.

Specification: >420 mbar vacuum in ≤3 s

yes	no

Renew supply pump.

IS

Supply pumps with white and black covers are not interchangeable (refer to 80–010 Section D).

Test pressure of supply pump when unlocking car.

Connect pneumatic line to tester at pressure connection (yellow). Unlock central locking system with key and take reading of maximum pressure.

Specification: >420 mbar pressure in ≤3 s

yes	no

Renew supply pump.

IS

Supply pumps with white and black covers are not interchangeable (refer to 80–010 Section D).

Test safety switching time when supply pump disconnected from line system.

Detach tester at supply pump, operate central locking system with key and measure safety switching time.

Specification: Supply pump must switch off after approx. 25 – 150 s.

Yes	No

Renew supply pump.

(IS)
Supply pumps with white and black cover are not interchangeable (refer to 80–010 Section D).

Test central locking system for leaks (80–120).

End of test.

2nd version for (D) only as of 03/94 and vehicles with code 885

See diagnosis manual

Preceding operation:
Checking central locking system for leaks (80-120)

Operation no. of operation texts and work units
or standard texts and flat rates ..... 80-0300 to 0306

1st version up to approx. 08/90

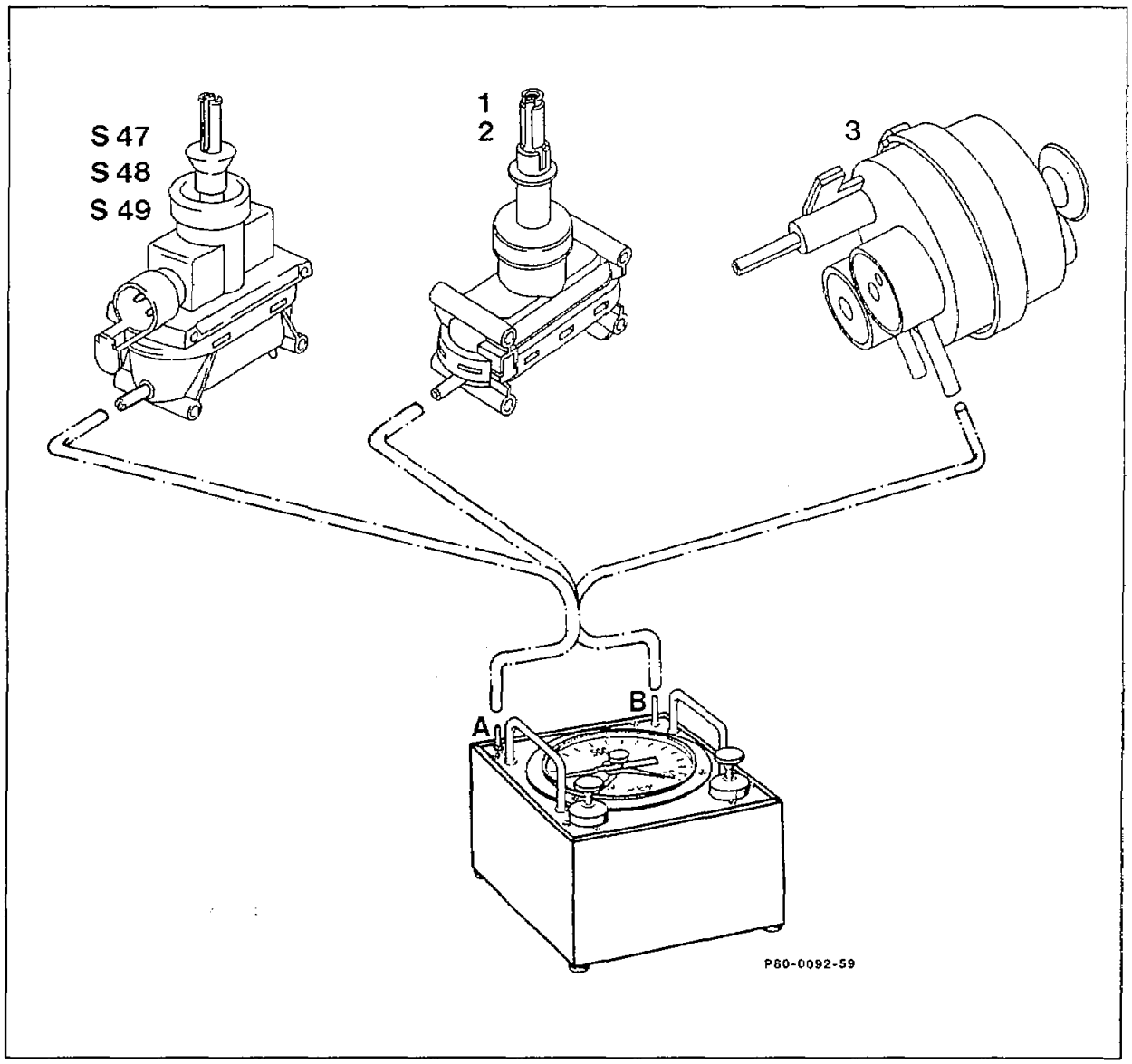

Test preparation	items 1-4
Leakage of actuator in pressure range	check. Permissible leakage rate per minute at a pressure of 600 mbar = 25 mbar.
Leakage of actuator in vacuum range	check. Permissible leakage rate per minute at a vacuum of 300 mbar = 25 mbar.

2nd version as of approx. 09/90

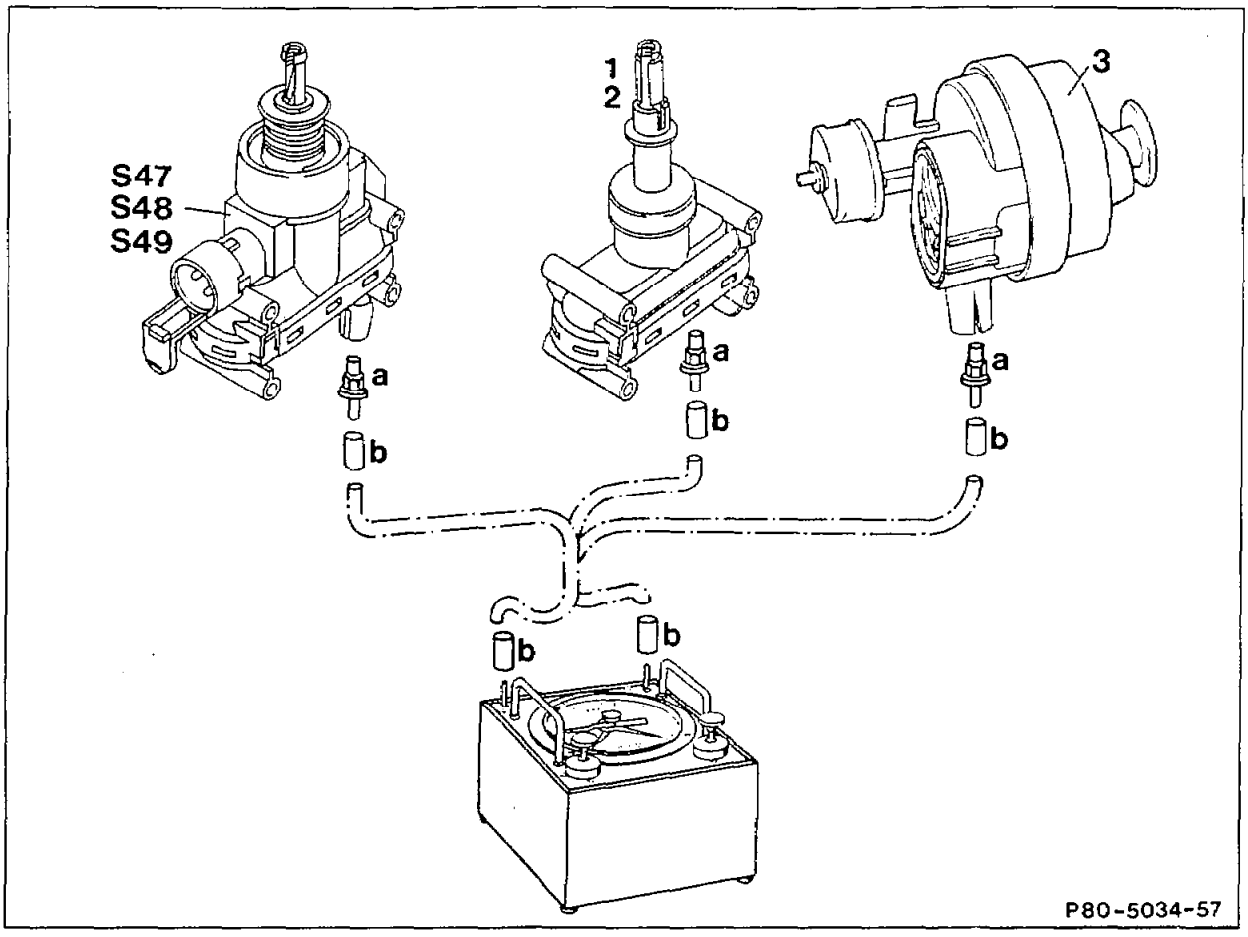

Test preparation	items 1-4.
Actuator	check for leaks in pressure range. Permissible leakage rate per minute at a pressure of 600 mbar = 25 mbar.
Actuator	check for leaks in the vacuum range. Permissible leakage rate per minute at a vacuum of 300 mbar = 25 mbar.

Special tool

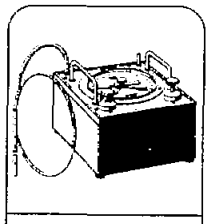

201 589 13 21 00

Parts for test	Part No.
Connector (b)	007 997 61 82
Cap	000 987 11 45
Adapter fitting (a)	129 805 00 44

Preparing test

1 Remove actuator (80-215, 80-220, 80-230).

2 Detach electrical cable harness and pneumatic line.

3 Push sliding sleeve (a) over switch rod mounting (b). It may be necessary to press sliding sleeve lock (arrow).

4 Connect tester 201 589 13 21 00 to pneumatic connection of actuator.

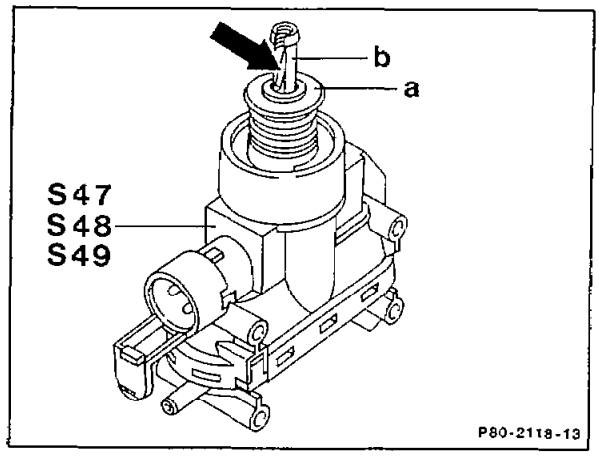

Note

If actuator has two pneumatic connections, seal one connection with cap 000 987 11 45.

Test

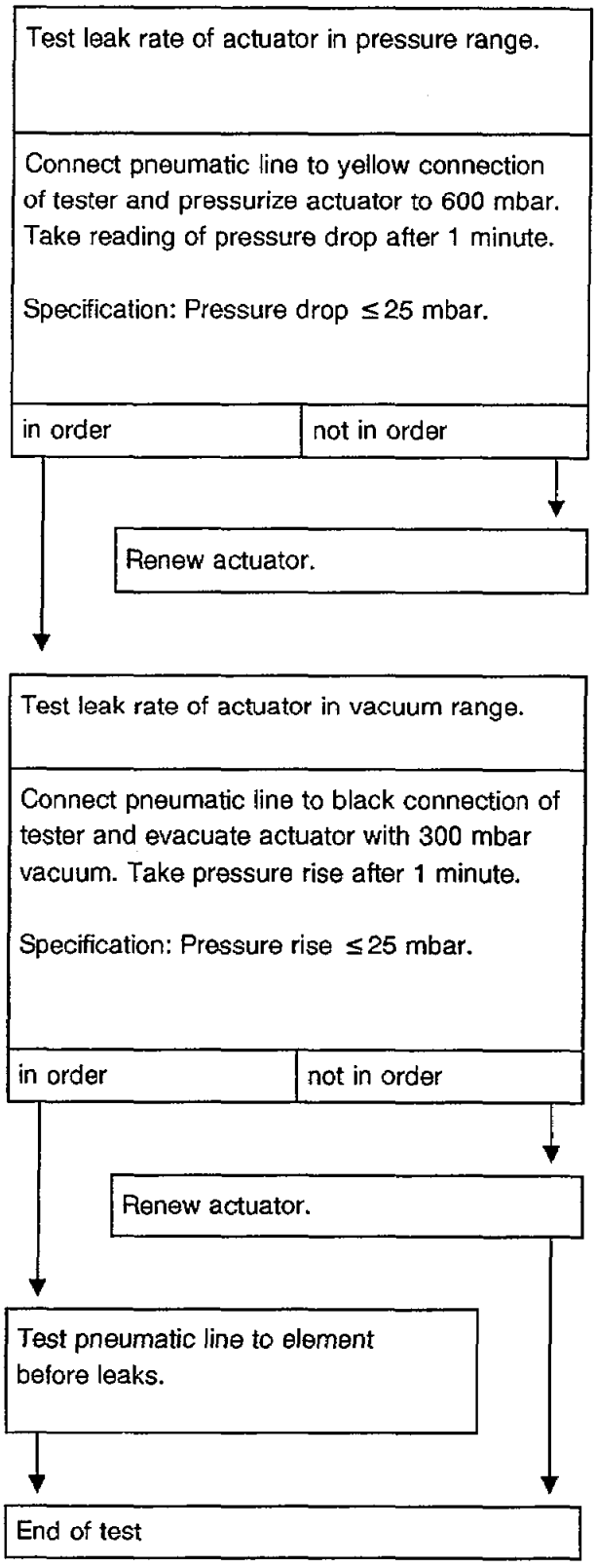

Note
If no leaks are detected at the element, test pneumatic line for leaks (80-125).

Preceding operation:
Check electrical function of central locking system (80-104)

Operation no. of operation texts and work units
or standard texts and flat rates 80-0030

A. Sedan, coupé and cabriolet

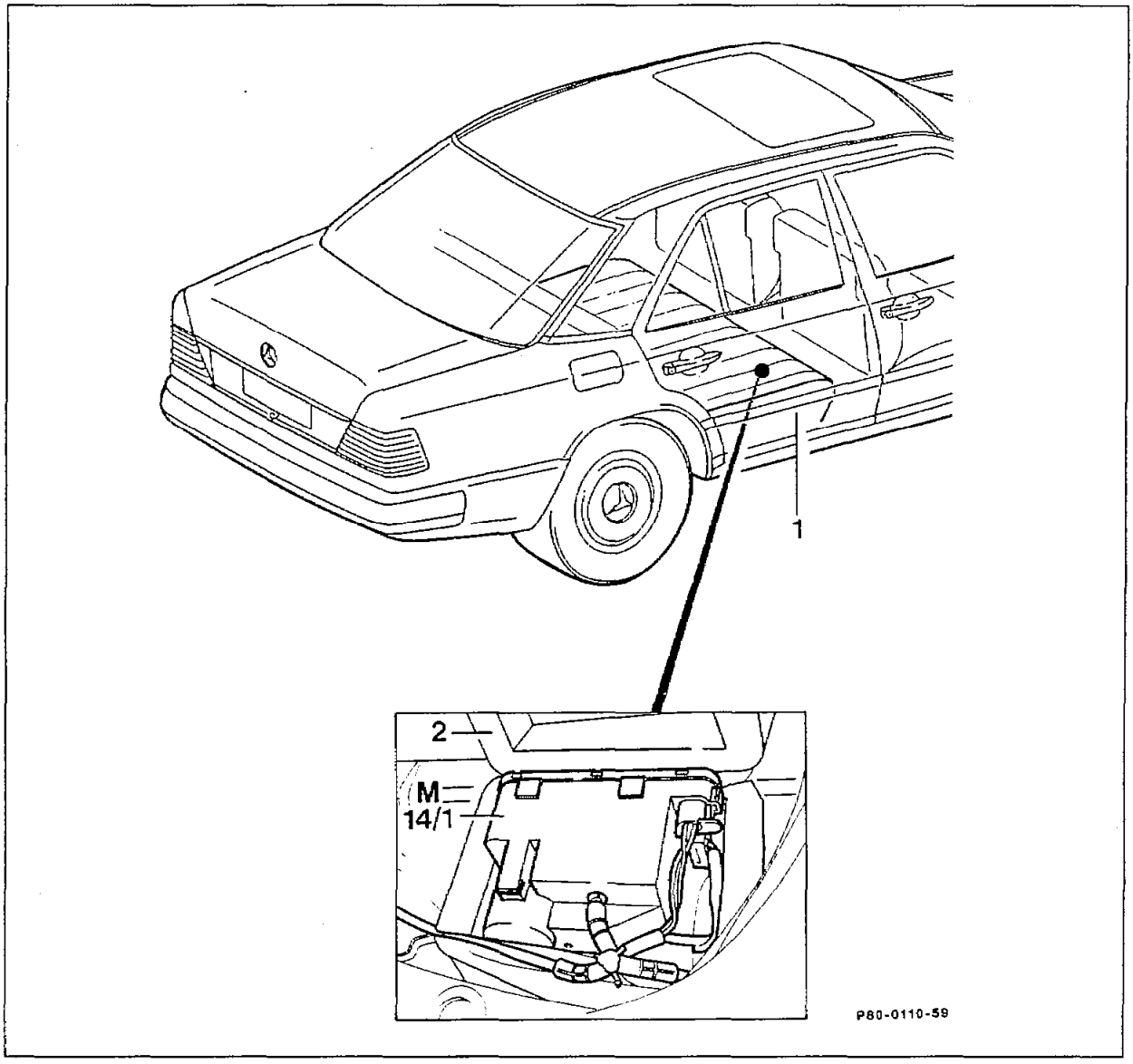

Rear seat squab (1)	remove.
Foam cube (2)	withdraw from recess and open.
Supply pump (M14/1)	remove.

Pneumatic lines or electric leads	disconnect.
Electrical function of central locking system or pneumatic function of supply pump	check (80-104 or 80-108).
Supply pump (M14/1)	install in reverse order.

B. Station Wagon

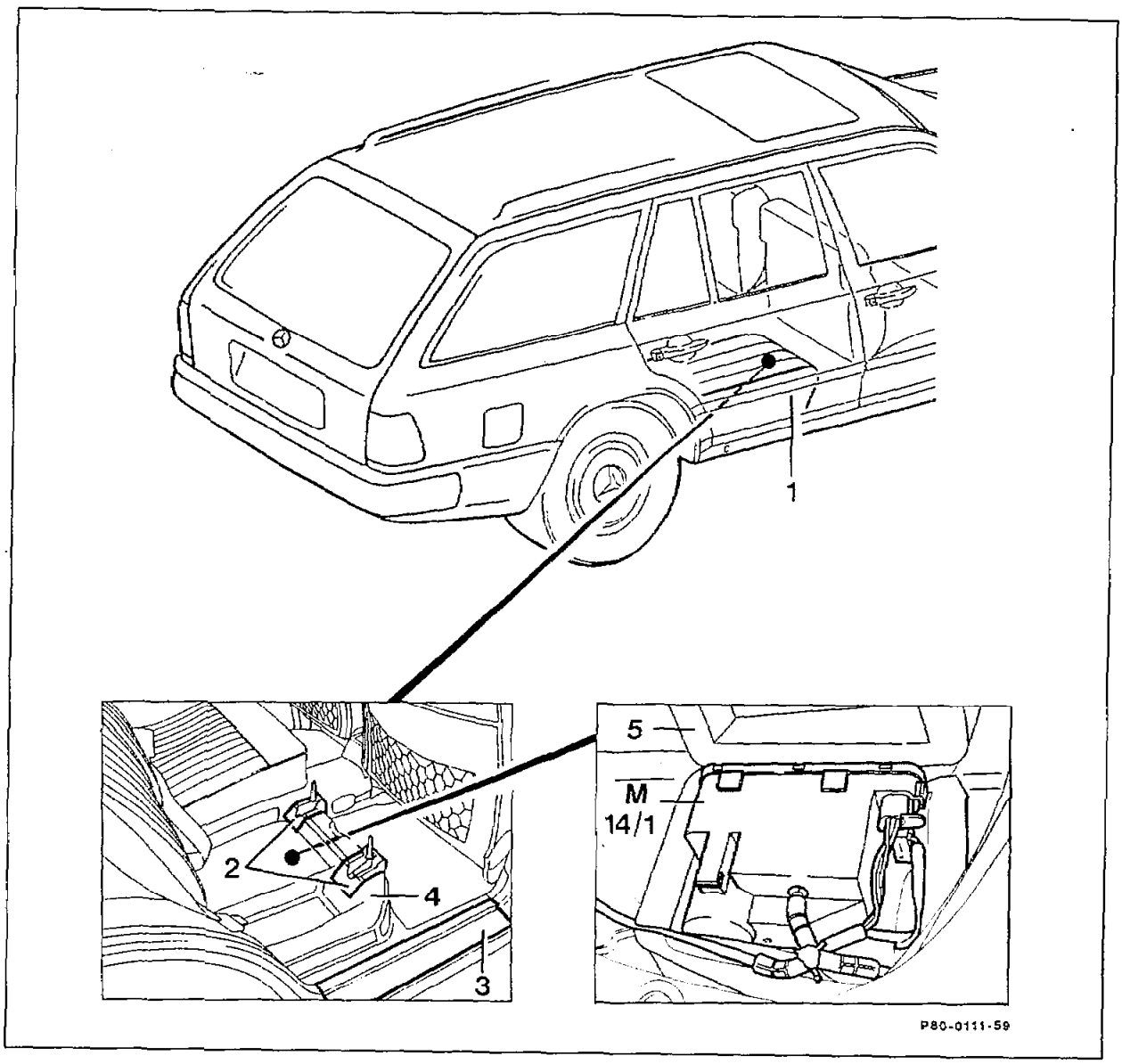

Right rear seat squab (1)	remove.
Cover (2)	remove.
Cover at entry (3)	remove.
Clips for fixing carpet below cover	press out.
Rear carpeting (4) below panelling at wheelhouse	pull forward and carefully fold in toward centre of vehicle.

Foam cube (5)	withdraw from recess and open.
Supply pump (M14/1)	remove.
Pneumatic lines or electric leads	disconnect.
Electrical function of central locking system or pneumatic function of supply pump	check (80-104 or 80-108).
Supply pump	install in reverse order.

A. General

1st version up to approx. 08/90

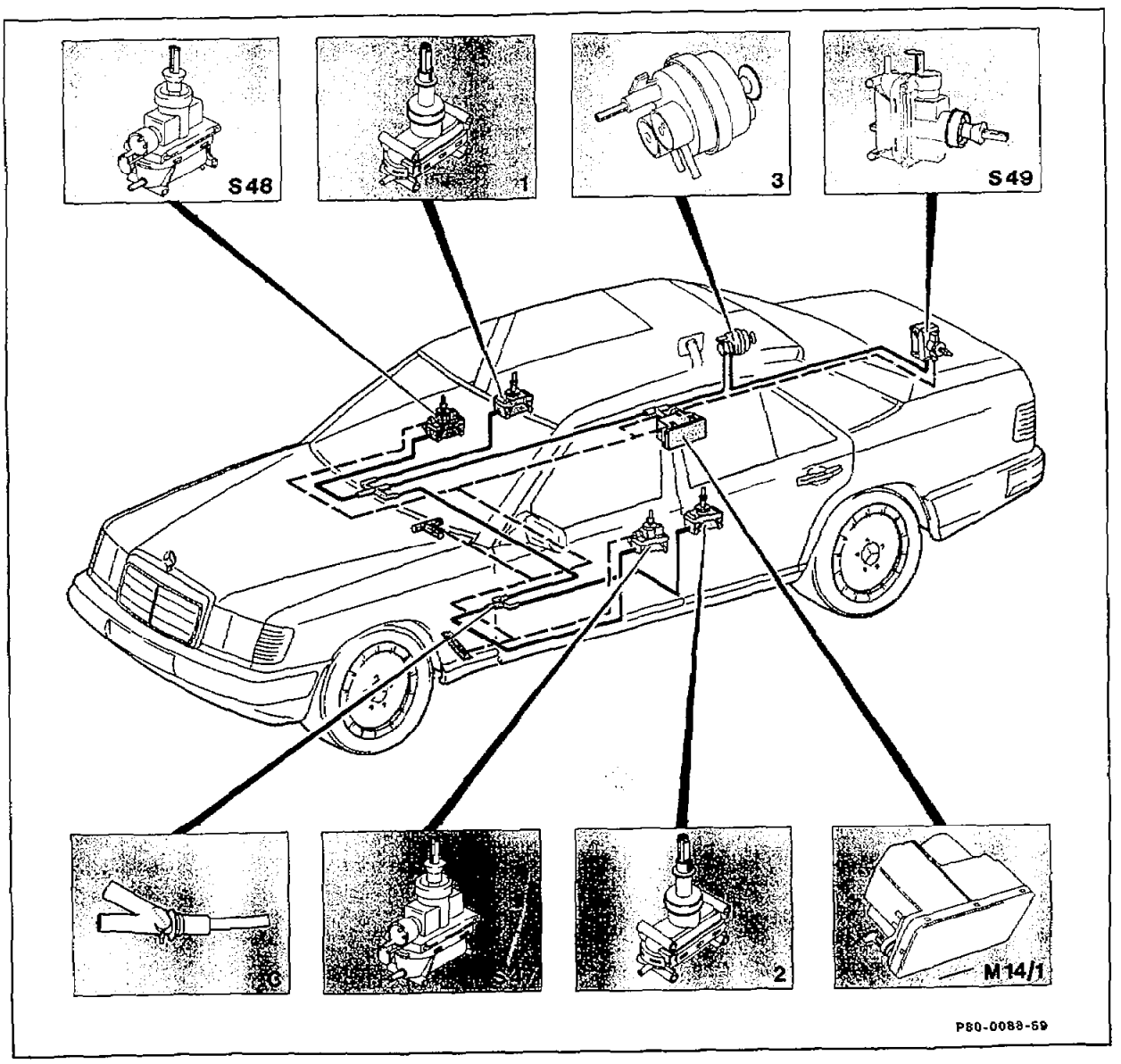

1	Right rear door actuator	M14/1	Central locking system supply pump
2	Left rear door actuator	S47	Front left door actuator
3	Fuel filler flap actuator	S48	Front right door actuator
C	Distributor	S49	Trunk lid actuator
- - - -	Electric lead	——	Pneumatic line

2nd version as of approx. 09/90

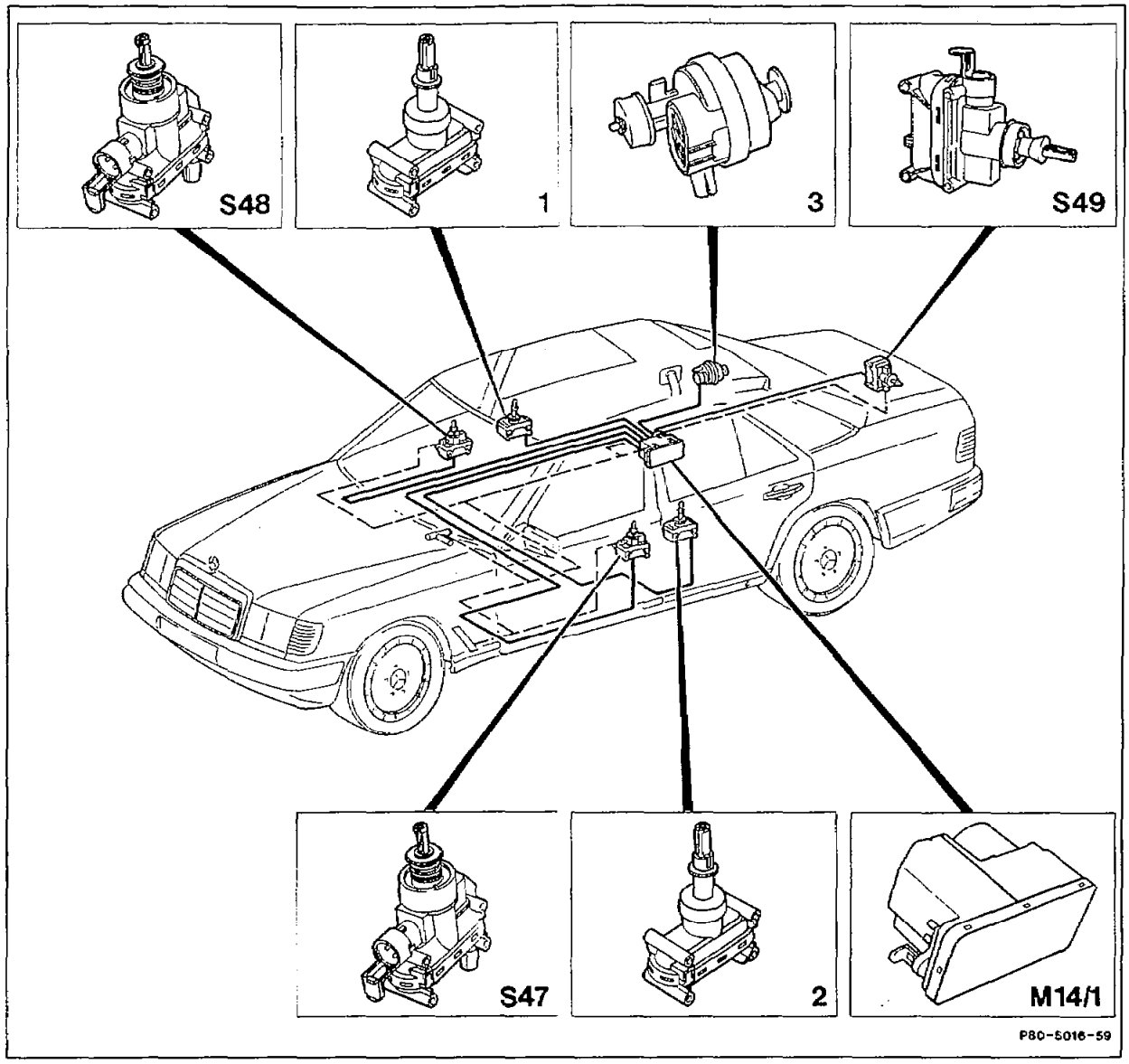

1	Right rear door actuator	M14/1	Supply pump, central locking system (ZV)
2	Left rear door actuator	S47	Left front door actuator
3	Fuel filler flap actuator	S48	Right front door actuator
- - - -	Electric lead	S49	Trunk lid lock actuator
		——	Pneumatic line

3. Version for (D) only as of 03/94 and vehicles with code 885

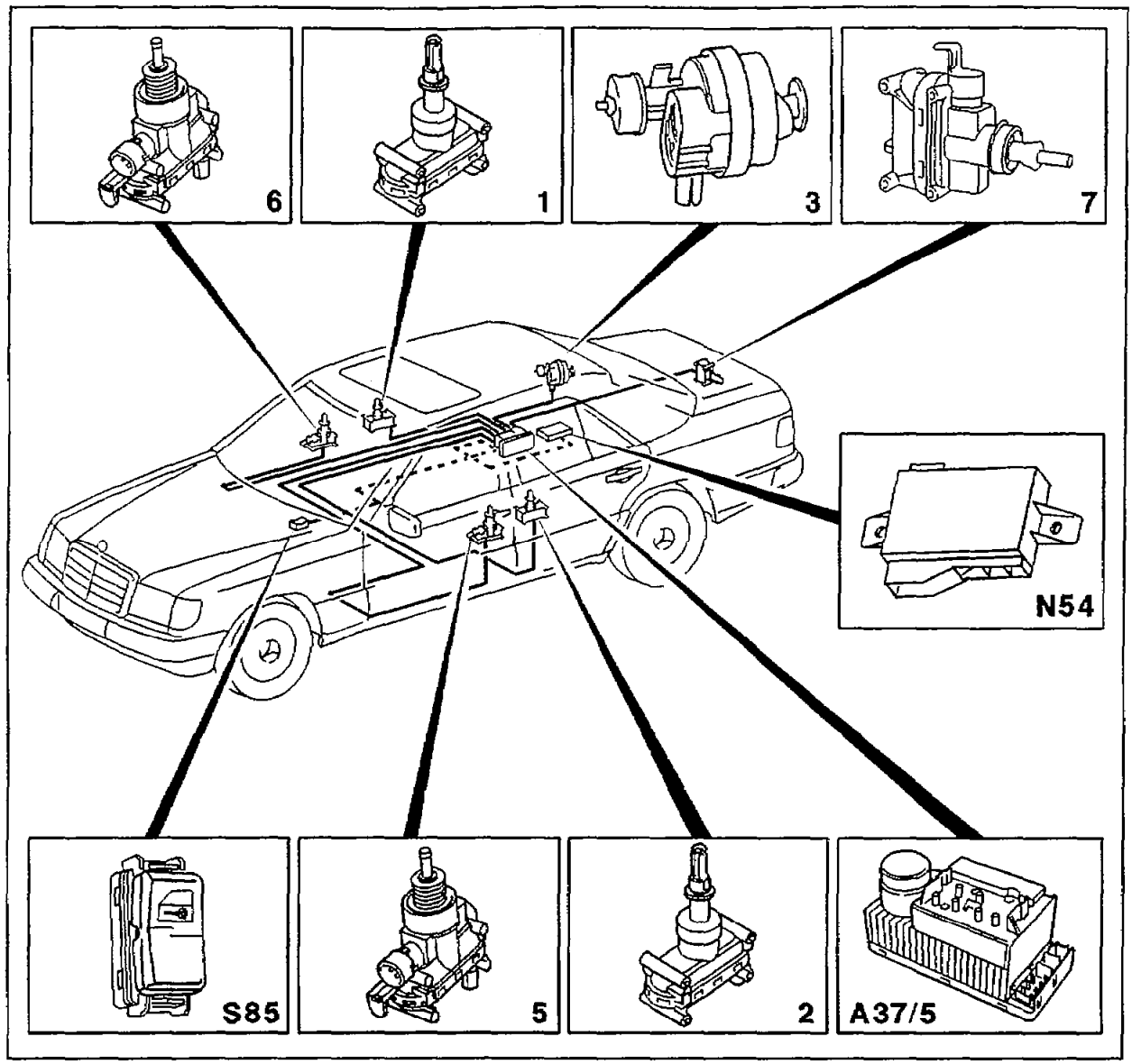

P80-5232-59

1	Right rear door actuator	A37/5	Pneumatic control unit
2	Left rear door actuator	N54	Infrared remote control unit for central locking system
3	Tank flap actuator	S85	Interior central locking system switch
5	Left front door actuator	——	Pneumatic line
6	Right front door actuator	- - - -	Electric lead
7	Trunk lid actuator		

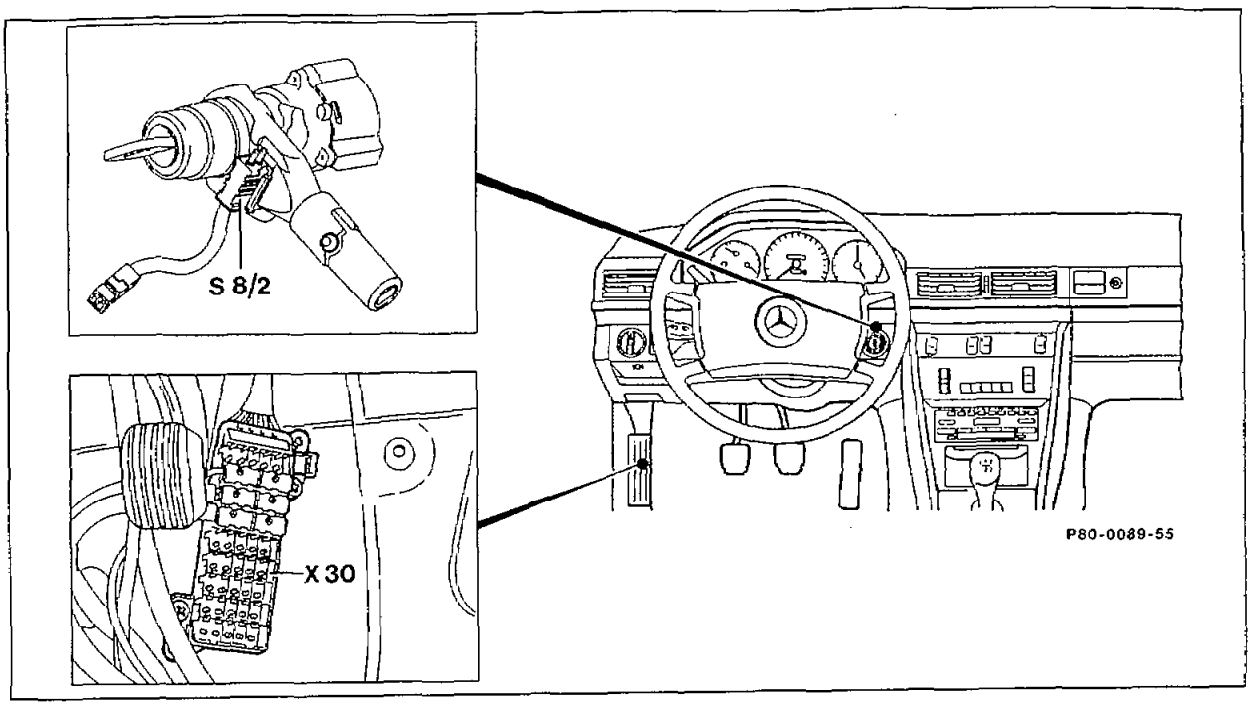

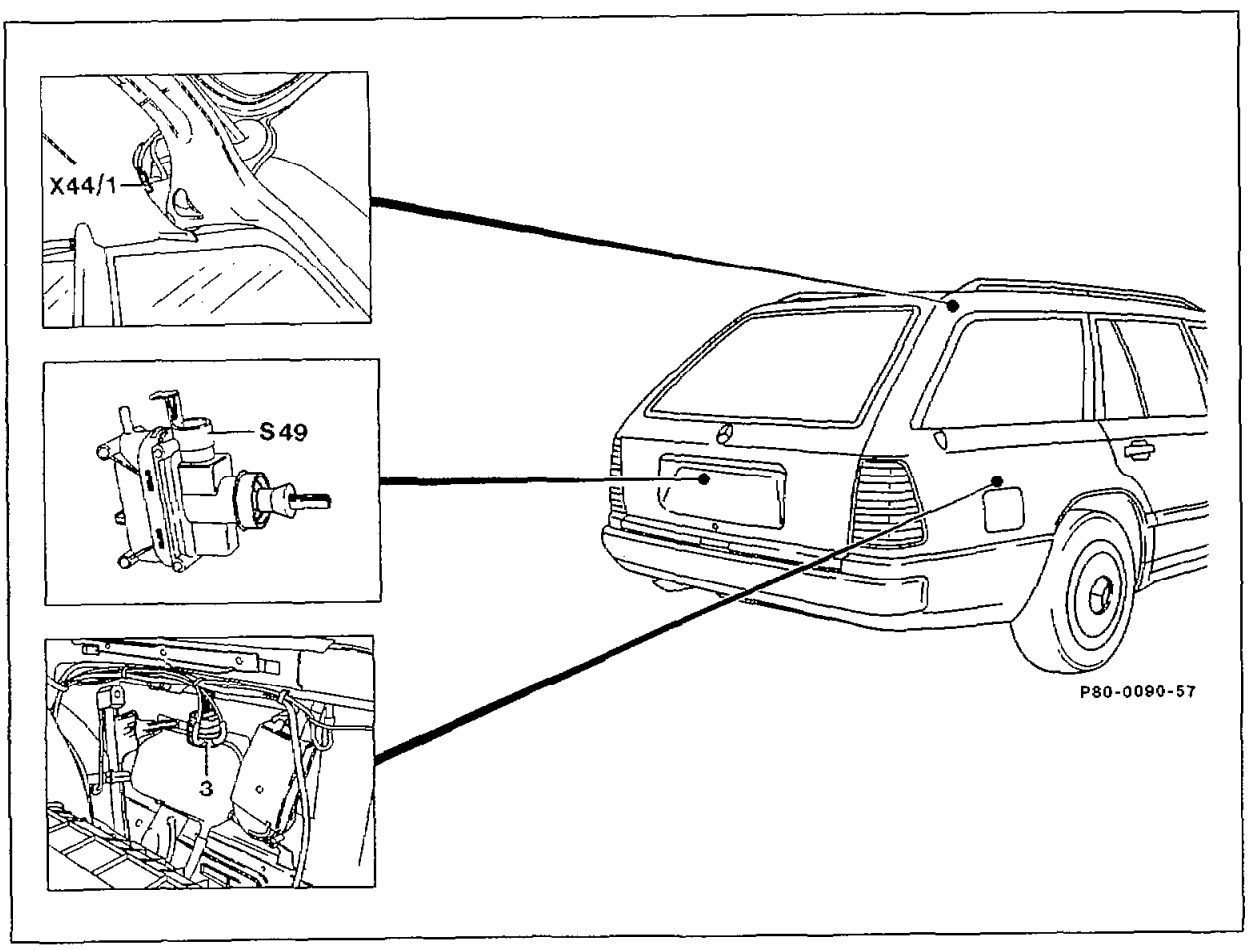

3	Fuel filler flap actuator	X30	Connector plug for optional electrical equipment
S8/2	Lighting/central locking system warning buzzer contact	X44/1	Connector, central locking system/trunk lock
S49	Tailgate actuator		

The central locking system with multipoint operation is based on the central locking system with single door operation. The car can be locked or be unlocked centrally from the driver's and front passenger's door and from the trunk lid or tailgate by operating the key or the locking pin. The central locking system includes all the doors, the trunk lid or tailgate and the fuel filler flap.

B. Operation

1. Version except (D) as of 03/94 and vehicles with code 885

Driver's door
The central locking system can be operated at any time when the driver's door is closed. From the outside with the key (turn to the right as far as stop to lock, turn to the left as far as a stop to unlock), from the inside by pressing down the locking pin or pulling the handle in the door trim.

Front passenger's door
The central locking system can be operated from the closed or opened front-passenger's door with the key or with the locking pin or handle (as the driver's door). The car can only be locked centrally, if the ignition key has been withdrawn or, after being withdrawn, has been re-inserted but not operated (key in position 0 in steering lock). This prevents the user inadvertently being locked out by operating the system from the front passenger's door with the key in position 1 and 2 or from the tailgate of Station Wagon.

Trunk lid (Sedan only)
The central locking system can be operated with the key when the trunk lid is opened or closed.

To unlock:
Turn key to the left as far as a stop and withdraw in vertical position.

To lock:
Turn key to right as far as the stop and withdraw in vertical position.

Additional lock:
Turn key to right as far as a stop and withdraw in horizontal position. The trunk lid now remains locked even when the doors are unlocked centrally.

Tailgate (Station Wagon only)
To unlock:
Turn key to the left as far as a stop and withdraw in vertical position.

To lock:
Turn key to the right as far as a stop and withdraw in vertical position. Car is locked and tailgate is additionally secured. When the central locking system is unlocked from one of the front doors, the tailgate remains locked. The additional interlock of the tailgate can only be cancelled at the tailgate by turning the key to the left as far as a stop or by opening the tailgate with the handle. On cars in (AUS) and (USA) version the locking pin must be withdrawn in place of opening with the handle.

The locking pin in the tailgate indicates whether the car is locked or unlocked.

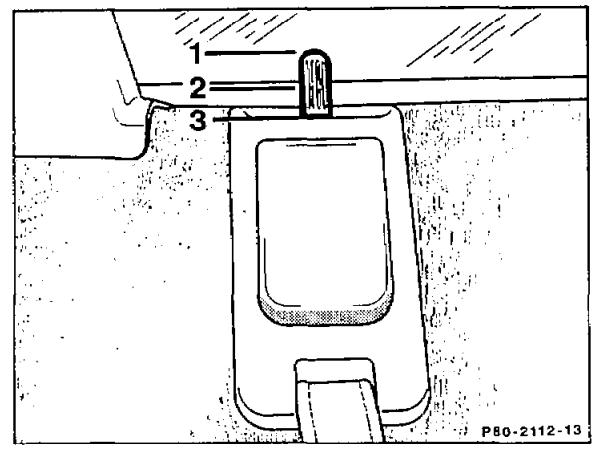

Position 1 = Car unlocked
Position 2 = Car locked from front door
Position 3 = Car locked from tailgate
(tailgate is additionally secured)

Note
If the trunk lid or tailgate of a centrally locked car is unlocked, all the doors and the fuel filler flap are also unlocked. After closing the trunk lid or tailgate, the car must again be locked centrally.

Manual release of fuel filler flap
If the central locking system fails, the fuel filler flap can be unlocked manually by operating a red manual release button on the fuel filler flap actuator.

2. Version for (D) only as of 03/94 and vehicles with code 885

The central locking system, anti-theft warning system and convenience feature can now only be controlled with the infrared remote control for the central locking system (IFZ).

C. Function

1. Version except (D) as of 03/94 and vehicles with code 885

Sequence of functions as illustrated by unlocking car at driver's door

When the key is turned to the left in the lock cylinder, the electric switch in the actuator is switched over by means of a linkage. This switch then passes a positive voltage along its control lead to the supply pump.
The supply pump operates and generates an overpressure which passes along a system of lines to all the pneumatic actuators.
The diaphragms in the actuators are pushed up, operate the locks via a linkage and unlock them.
The fuel filler flap actuator unlocks the flap directly. At the same time, the electric switches of the actuator in the front passenger's door and in the trunk lid are also switched over by the pneumatic element of the actuator and like the mechanically operated switch in the driver's door actuator, also supply a positive voltage to the supply pump.

Once a pressure of approx. 450 mbar has been reached in the system, a pressure switch switches off the supply pump.
Air is again released from the pneumatic line system and from the actuator through the supply pump – the system is pressureless and the unlocking operation is completed.

The locking operation proceeds in a similar manner to the unlocking operation. However, the supply pump is actuated by a negative control voltage, the direction of rotation of the pump motor is reversed, thus producing the vacuum required for locking.

Function diagram

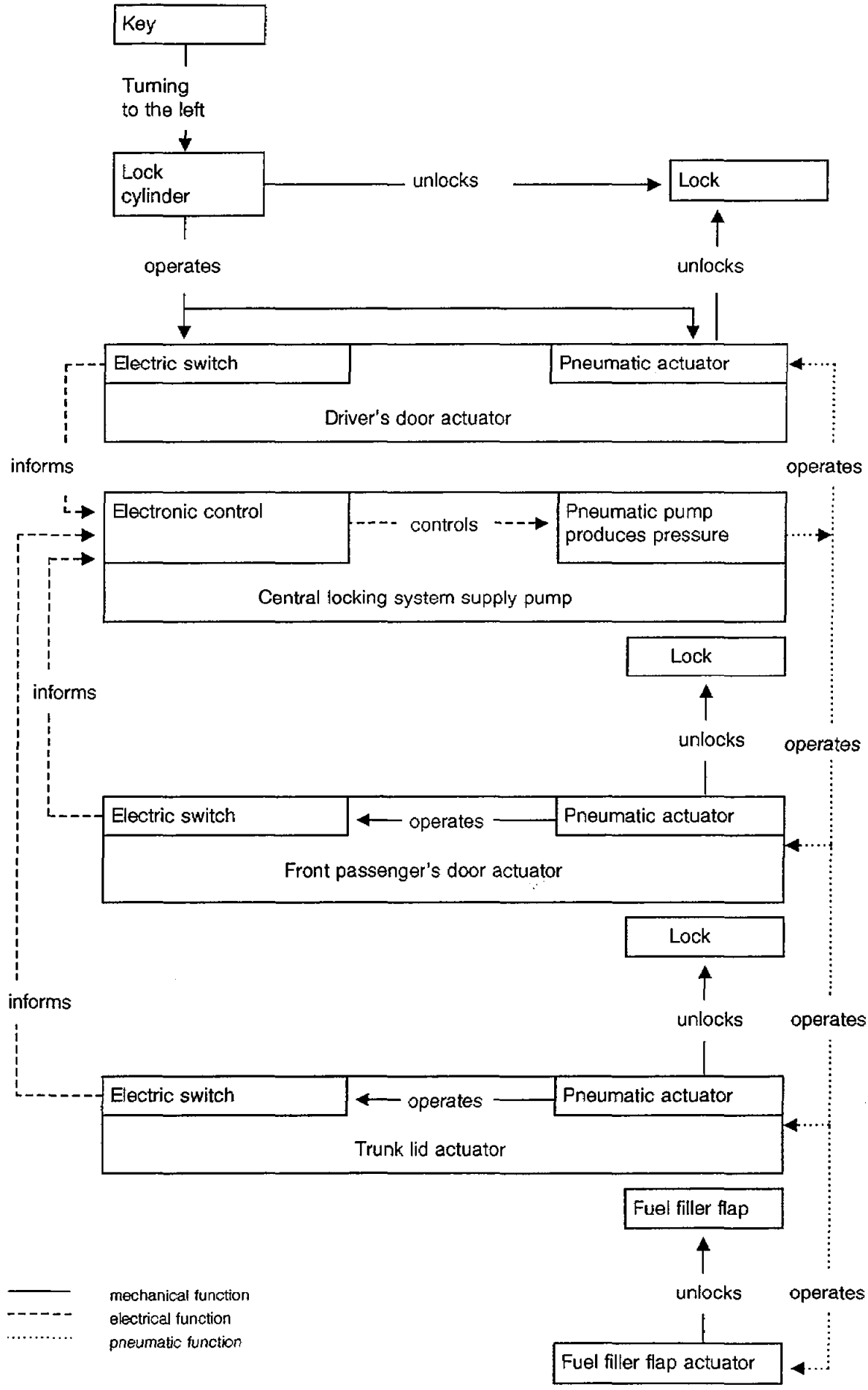

2. Version for (D) only as of 03/94 and vehicles with code 885

As of 03/94 the infrared remote control for the central locking system (IFZ) is a standard feature. The central locking system pump as well as the control unit for the infrared remote control are the same as for model series 202 in terms of the design and function. Since the central locking system actuators are no longer connected electrically, the central locking system, anti-theft warning system and convenience feature can no longer be actuated with the mechanical key. On vehicles with anti-theft warning system an alarm is tripped on vehicles locked with the infrared remote control when they are unlocked with the mechanical key. Moreover, the standard immobilizer can only be activated and deactivated with the infrared remote control for the central locking system.

D. Components

Supply pump (M14/1)
1st version, Sedan up to approx. 04/86, Station Wagon up to approx. 09/88.
The supply pump for multipoint operation has two electrical connections. In view of the modified electronic switching function, this supply pump cannot be interchanged with the supply pump used hitherto (single-door operation).

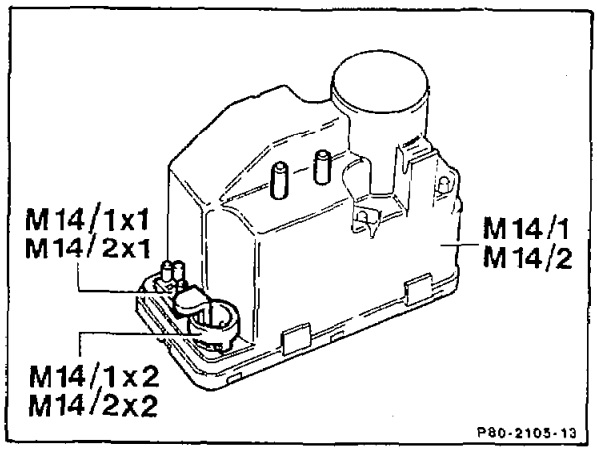

The supply pump is connected to positive (terminal 30) and the ground (terminal 31) through the 2-pin connection (M14/1x1, 3-pin on cars with orthopedic driver's backrest M14/2x1).

The actuators pass a negative control voltage during locking and a positive control voltage during unlocking through the connector (M14/1x2) to the supply pump.
The supply pump produces pressure for unlocking and vacuum for locking (approx. 500 mbar). If there is a severe leakage, the supply pump switches off after 25 – 150 s (safety switching time). The electronic control features several logic functions which avoid incorrect switching operations and faults.

2nd version from approx. 05/86 to approx. 09/88 (not for Station Wagon).
The control of the supply pump is equipped with a "full customer IC". This IC features not only the same functions as hitherto but also a fault current detection which prevents creep currents resulting in the system operating unintentionally. Instead, the control inputs affected are deactivated. The supply pump is recognizable from the light-coloured cover (arrow), hitherto black.

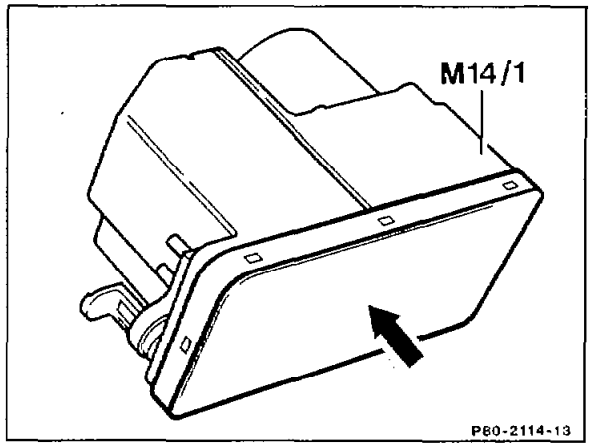

At the same time, the electrical wiring harness has been modified. The ground cable of the actuator for the trunk lid lock (S49) is now connected directly to the main ground point *(refer to wiring diagrams 80-800)*; hitherto to the lighting/central locking system warning buzzer contact (S8/2).
Production breakpoint as from
Vehicle Ident End No.:
A 245572.
The modified supply pump may not be fitted to cars with a lower Vehicle Ident End No. The previous version remains valid for such cars.

3rd version as from 10/88
To enhance the comfort features, the supply pump of the central locking system is replaced by an enhanced-performance version. It can be interchanged with the previous version. The distinguishing feature of pump with black cover for Model 124 Station Wagon and pump with light- coloured cover for all other models remains unchanged.
Production breakpoint as from
Vehicle Ident End No.:
A 875395
F 092086

4th version with infrared remote control as of approx. 09/92.
This supply pump has an additional electrical plug connection (M14/1x3, M14/2x3) for the control by the infrared remote control unit.

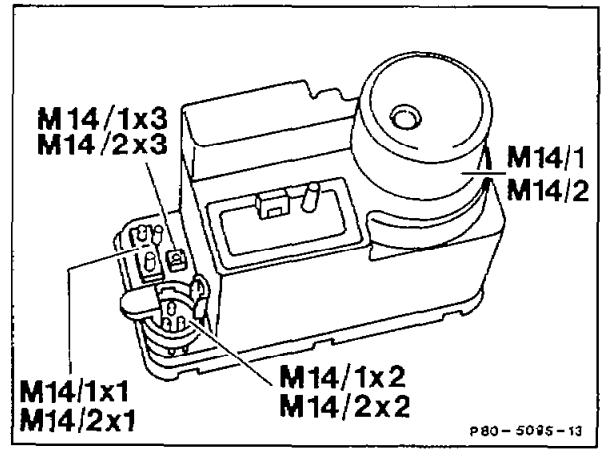

5. Version for (D) only as of 03/94 and vehicles with code 885

With introduction of the immobilizer the pneumatic control unit (PSE) is installed in combination with the control unit for the infrared remote control used on model series 202. See diagnosis manual for diagnosis on pneumatic control unit (PSE) and infrared remote control.

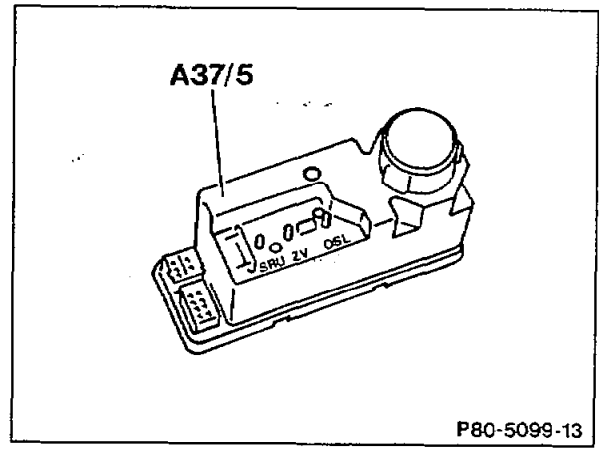

Technical data of supply pump

		from approx. 10.88	up to approx. 09/88
Pressure cutoff point	(mbar)	approx. 650	approx. 500
Switching time	(s)	approx. 1	approx. 3
Safety switching time	(s)	25 – 30	25 – 150
Power consumption	(A)	max. 7.5	max. 3.5
Air admission/release time	(s)	approx. 10	approx. 10

Actuator (S47, S48, S49)

A combined actuator is fitted to both front doors and the trunk lid or tailgate. This actuator has an electrical and a pneumatic connection (arrows)..

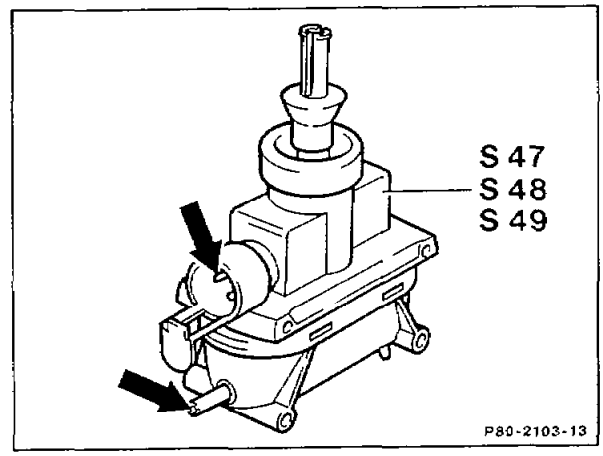

1st version up to approx. 08/90

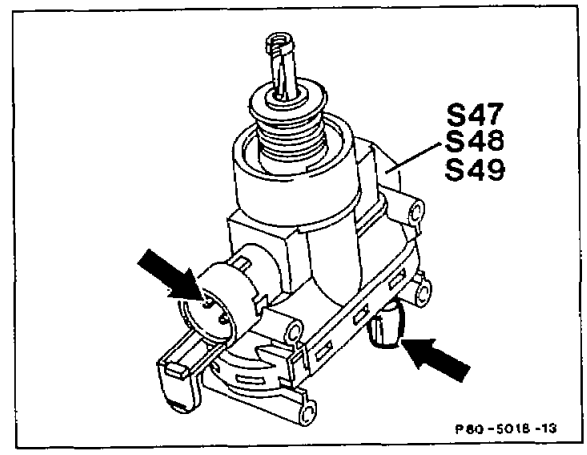

2nd version as of approx. 09/90

The actuators of the front doors and tailgate differ externally from the trunk lid actuator in having different colour coding (refer to table on p. 11). When performing repairs, the actuator must not be confused as a harder cup seal is used on the trunk lid actuator for locating the top and bottom end stop.

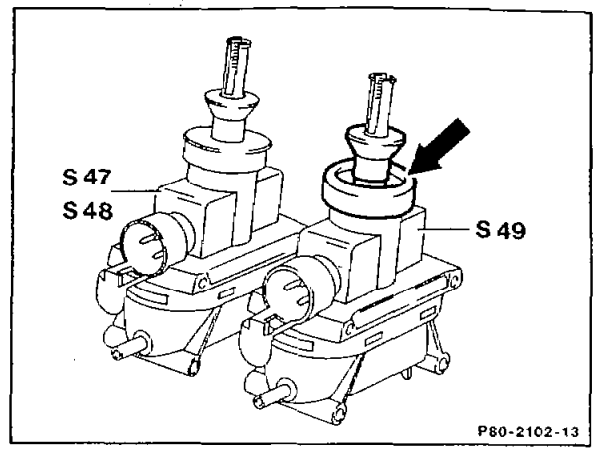

S47 Front left door actuator
S48 Front right door actuator
S49 Trunk lid actuator (tailgate)

Trunk lid lock actuator S49 (coupé and cabriolet)

The electrical pneumatic operation corresponds to the actuator used in the Sedan. The cup seal on the actuating rod is eliminated.

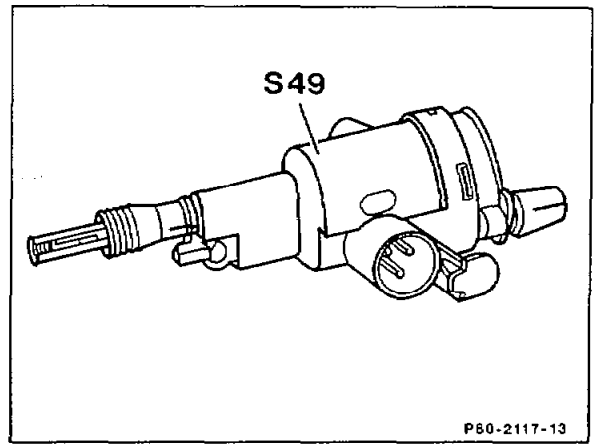

The actuator is clipped to the cover (a) (screwed on for Sedan).

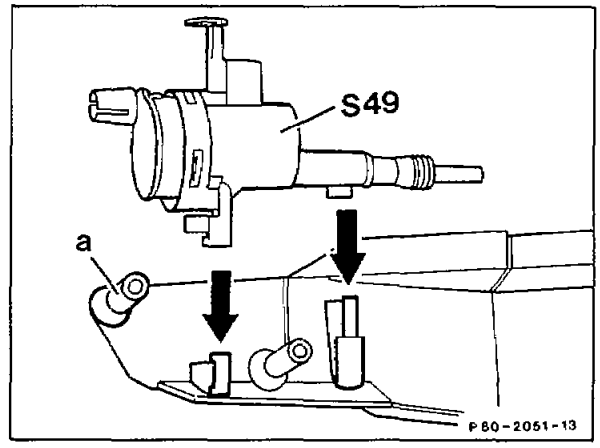

Note

As of 03/94 the actuators are no longer connected electrically on vehicles for (D) and vehicles with code 885 and therefore operate as purely pneumatic elements.

Distinguishing features of actuator (S47, S48, S49)

	Colour			Installation point		
Manufacturer	Housing	Sliding sleeve	Cup seal	Driver's door Tailgate	Trunk lid Sedan	Trunk lid Coupé, Cabriolet
Bosch	black	black	black	•		
	black	yellow	black		•	
Hella	black	black	black	•		
	black	black	red		•	
	white	black	black	•		
	white	black	red		•	
Woco	black	black	black	•		
	black	black	white or red		•	
Woco [1]	black	black	black		•	•
Alfmeier	black	black	–			•

[1] Red shift rod mounting, for vehicles with trunk lid auxiliary locking device only

The electrical and pneumatic operation of all the actuator is identical. Positive and ground are supplied constantly to the electrical switch in the top part of the actuator. The two-way switch passes a positive control voltage for unlocking and a negative control for locking to the supply pump.

The bottom chamber of the element is pressurized for unlocking and a vacuum created for locking.

The electrical and pneumatic parts of the actuator can be separated by a sliding sleeve with detent to enable the lock to also be operated when the actuator is still pressurized or when a vacuum exists.

Sliding sleeve lock (phased in from approx. 12/86)

An integrated support (arrow) prevents the position of the sliding sleeve (a) from being altered. When the connecting rod to the lock is inserted, this overrides the support.
As a result, the element is in the installation position. Positioning faults at the door actuator are then no longer possible.

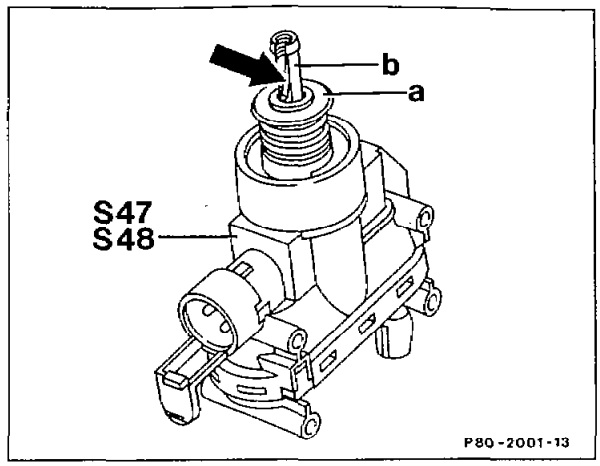

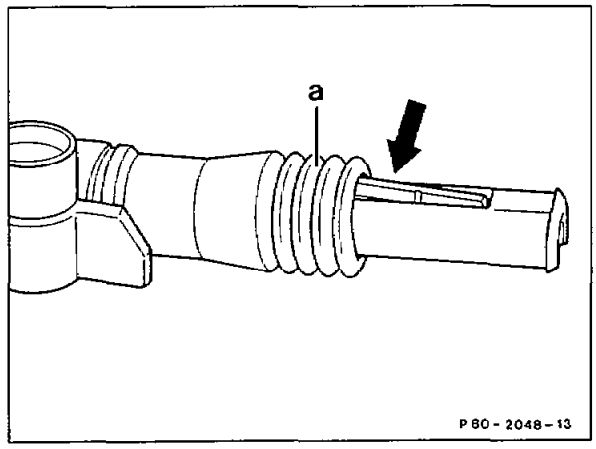

Rear door actuator

The rear door actuator is fitted with a pneumatic connection. The bottom chamber of the actuator is pressurized for unlocking and a vacuum created for locking. The pneumatic line is fixed in place by a clip (arrow) on the underside of the housing.

1st version up to approx. 08/90

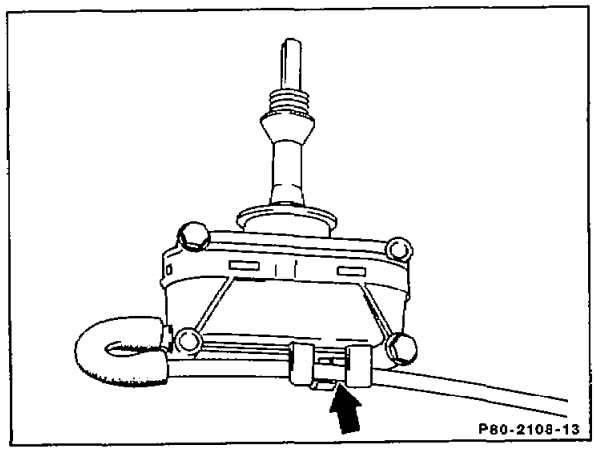

2nd version as of approx. 09/90

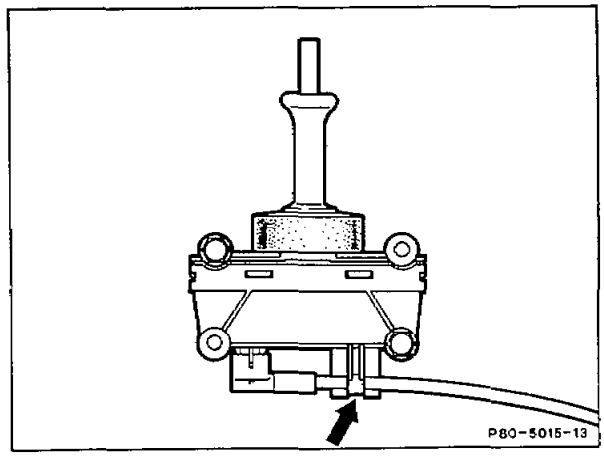

Fuel filler flap actuator

1st version up to approx. 03/85

The designed operation of this actuator corresponds to the rear door actuator, although it fitted with a harder cup seal for positioning the top and bottom end stop.The sliding sleeve can be distinguished by its yellow colour.

2nd version from approx. 04/85 to approx. 03/87 (Sedan only)

Actuator as 1st version but with anti-theft lock (a) and linkage guide (arrow). The anti-theft lock prevents the actuator being unlocked manually via the full filler flap.

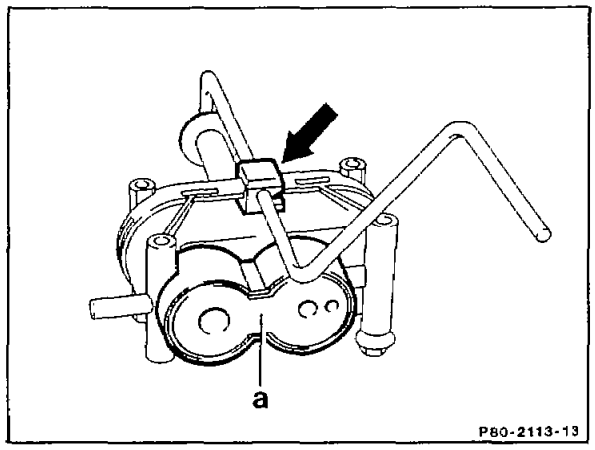

3rd version

Model 124 Sedan from approx. 04/87, A 490369

Model 124 Station Wagon and Coupé from start of production.

Clip-fit element with direct locking linkage, anti-theft lock and manual release button.

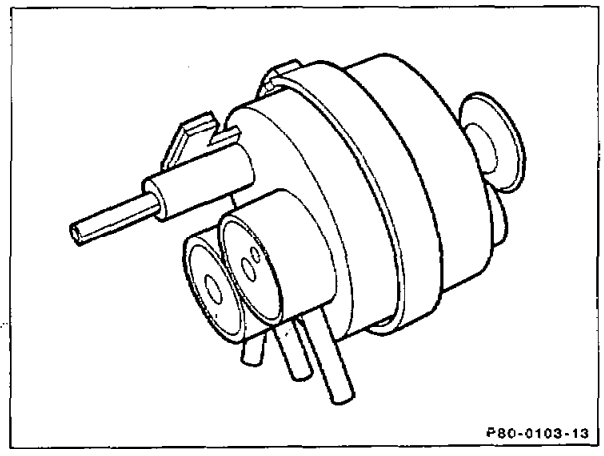

4th version as of approx. 09/90
Clip-fit pneumatic actuator with direct locking linkage, anti-theft device and emergency unlocking button.
A valve in the actuator prevents the locking linkage from being pushed back manually via the fuel filler flap. The guide bush (6) covers the locking linkage and prevents water coming into contact with the linkage which can result in the actuator icing up in winter.

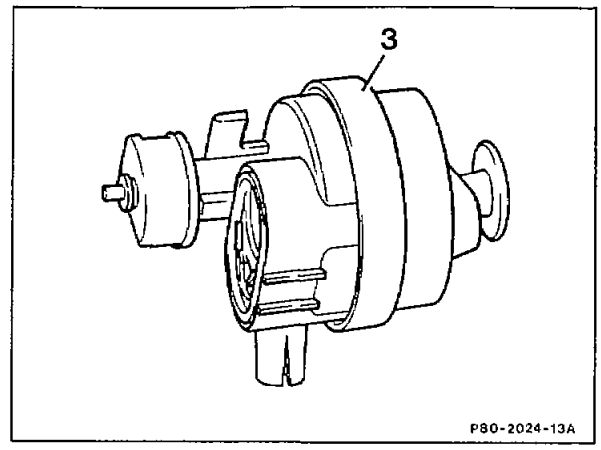

Warning buzzer contact, exterior lamps/central locking system (S8/2), (except vehicles for (D) as of 03/94 and vehicles with code 885)
This switch on the steering lock interrupts the ground cable to the actuator in the right front door (left door on RHD) if the ignition key is in position 1 or 2 in the steering lock. In addition the ground supply to the trunk lid actuator is also interrupted on Model 124 Sedan from approx. 05/85 to approx. 04/86 and on Model 124 Station Wagon from start of production.

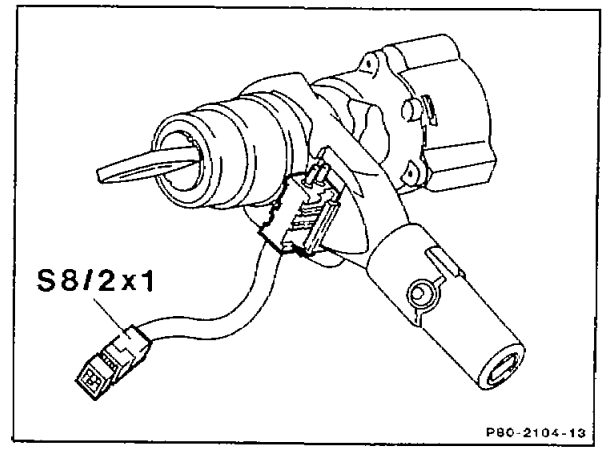

Wiring harness with replaceable connectors (coupé and cabriolet)

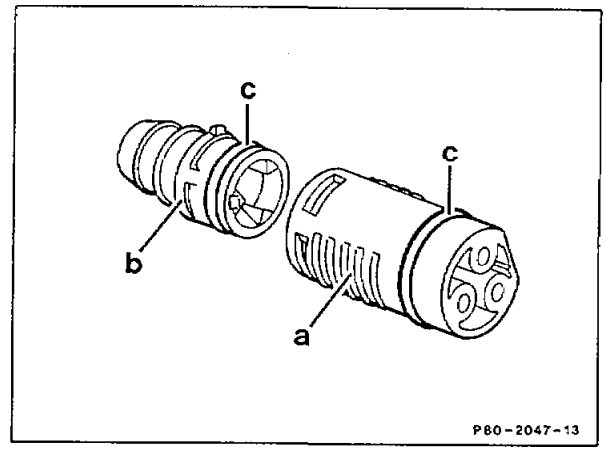

a Front part of connector
b Rear part of connector
c O-ring

Interior central locking system switch (S85) ((D) only as of 03/94 and vehicles with code 885)

Vehicles unlocked with the infrared remote control can be locked and unlocked centrally with a switch in the center console.

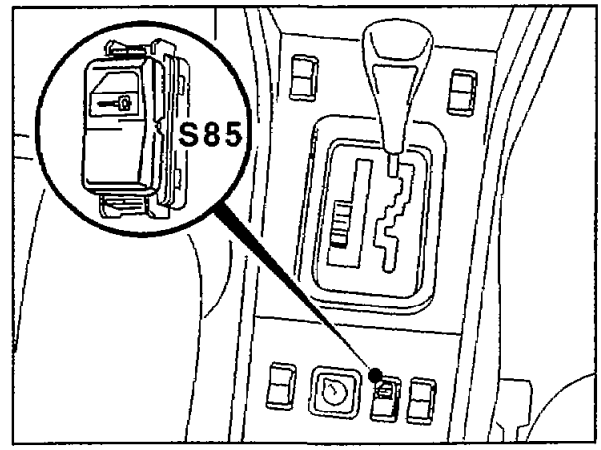

P80-5233-13

Pneumatic lines with quick-fit connections
In September 1988 pneumatic lines were, and will be as of approx. 09/90, fitted with quick-fit connections which run directly from a 6-point distributor at the supply pump to the pneumatic actuators. The distributors in the front left and front right footwell are therefore not fitted.

Cars affected

Model	Vehicle Ident End No. from	to
124	1A 861403 1F 097724 and across the range as of approx. 09/90	1A 866954 1F 098305

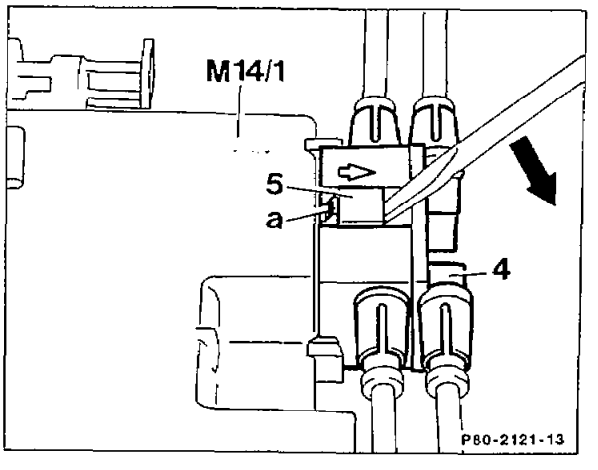

4 6-point distributor
5 Locking device
M14/1 Central system locking supply pump
a Pull-off lock

All pneumatic lines are fitted with a plug at their end which engages in the pneumatic connecting bush of the actuator.

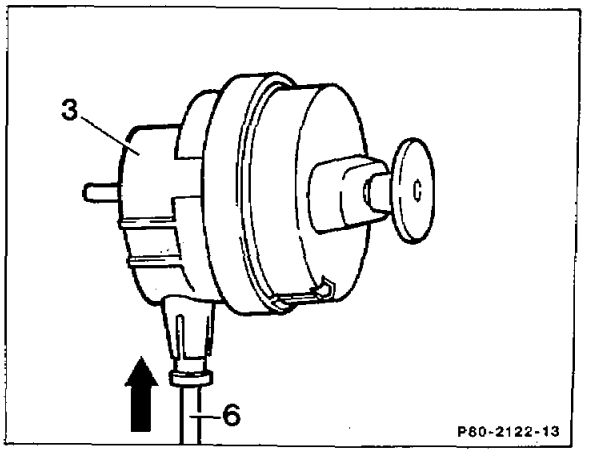

3 Fuel filler flap actuator
6 Pneumatic line

The ends of the pneumatic lines are marked. The markings indicate to which pneumatic actuator the line belongs.

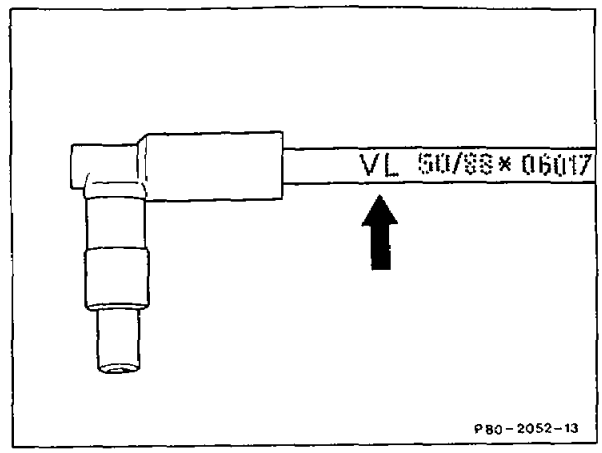

Marking	Actuator
VL	Left front door actuator
VR	Right front door actuator
HL	Left rear door actuator
HR	Right rear door actuator
HD	Trunk lid lock actuator
KE	Fuel filler flap actuator

A. General

1st version up to approx. 08/90

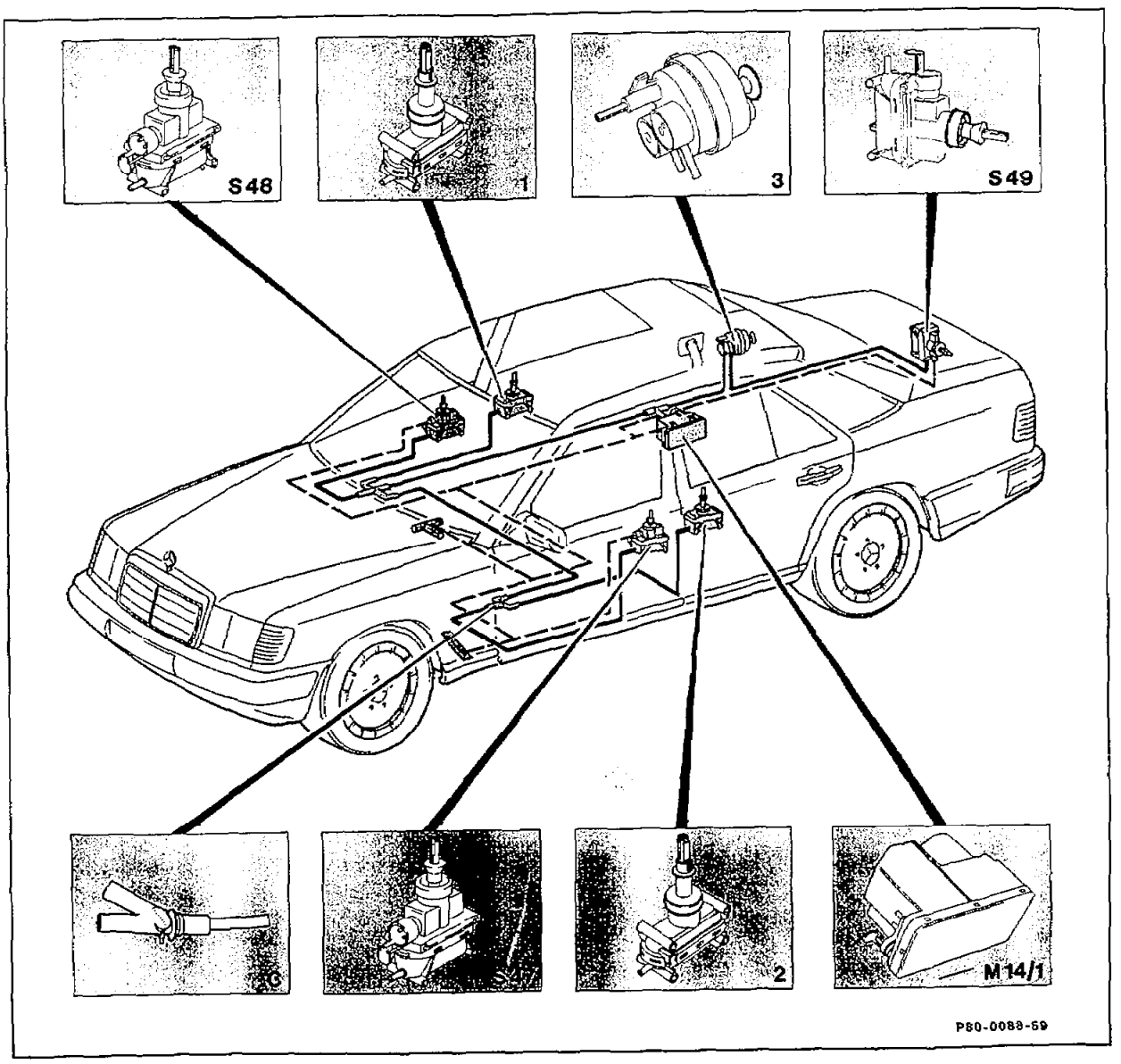

1	Right rear door actuator	M14/1	Central locking system supply pump
2	Left rear door actuator	S47	Front left door actuator
3	Fuel filler flap actuator	S48	Front right door actuator
C	Distributor	S49	Trunk lid actuator
- - - -	Electric lead	——	Pneumatic line

2nd version as of approx. 09/90

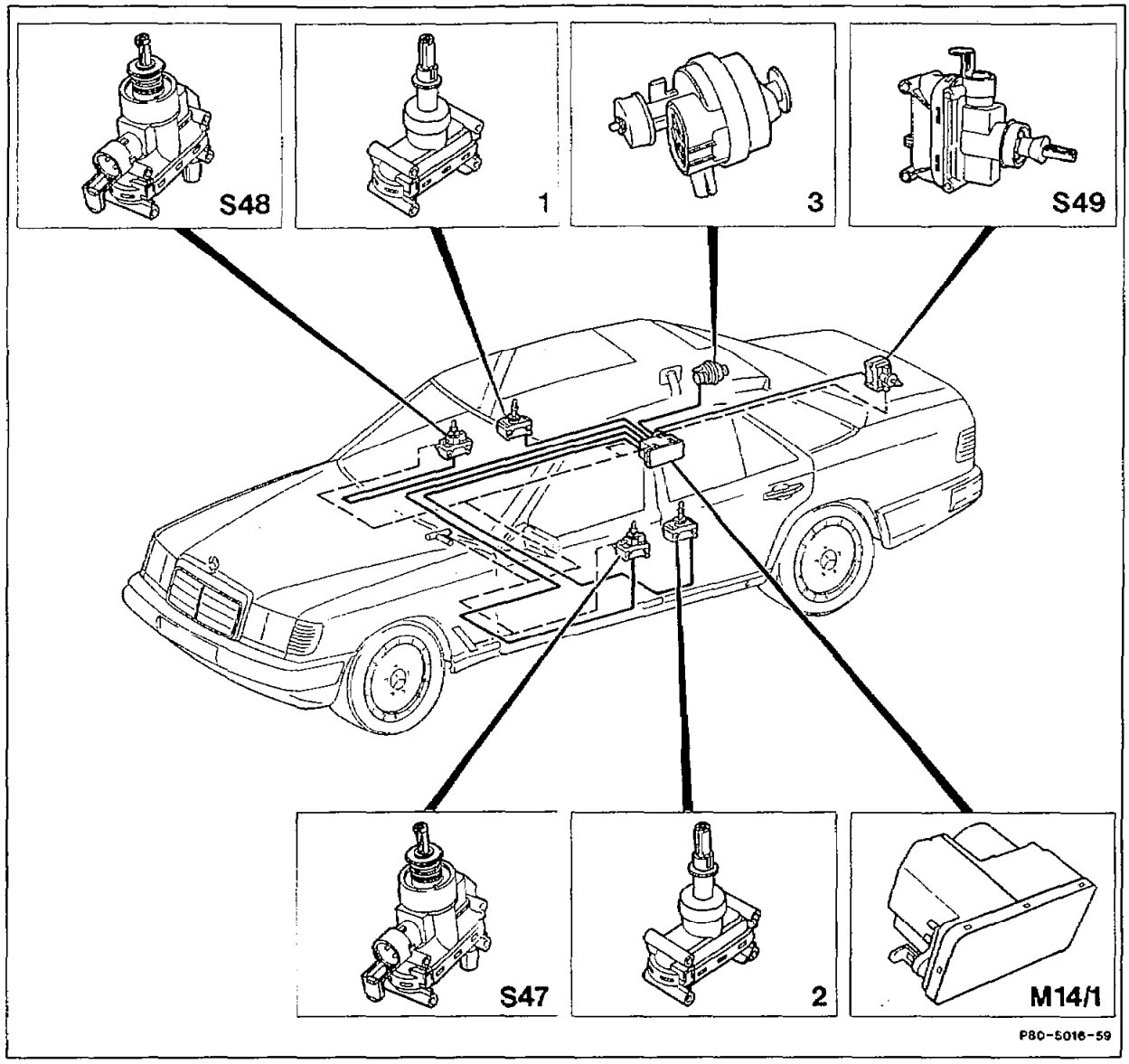

1	Right rear door actuator	M14/1	Supply pump, central locking system (ZV)
2	Left rear door actuator	S47	Left front door actuator
3	Fuel filler flap actuator	S48	Right front door actuator
- - - -	Electric lead	S49	Trunk lid lock actuator
		——	Pneumatic line

3. Version for (D) only as of 03/94 and vehicles with code 885

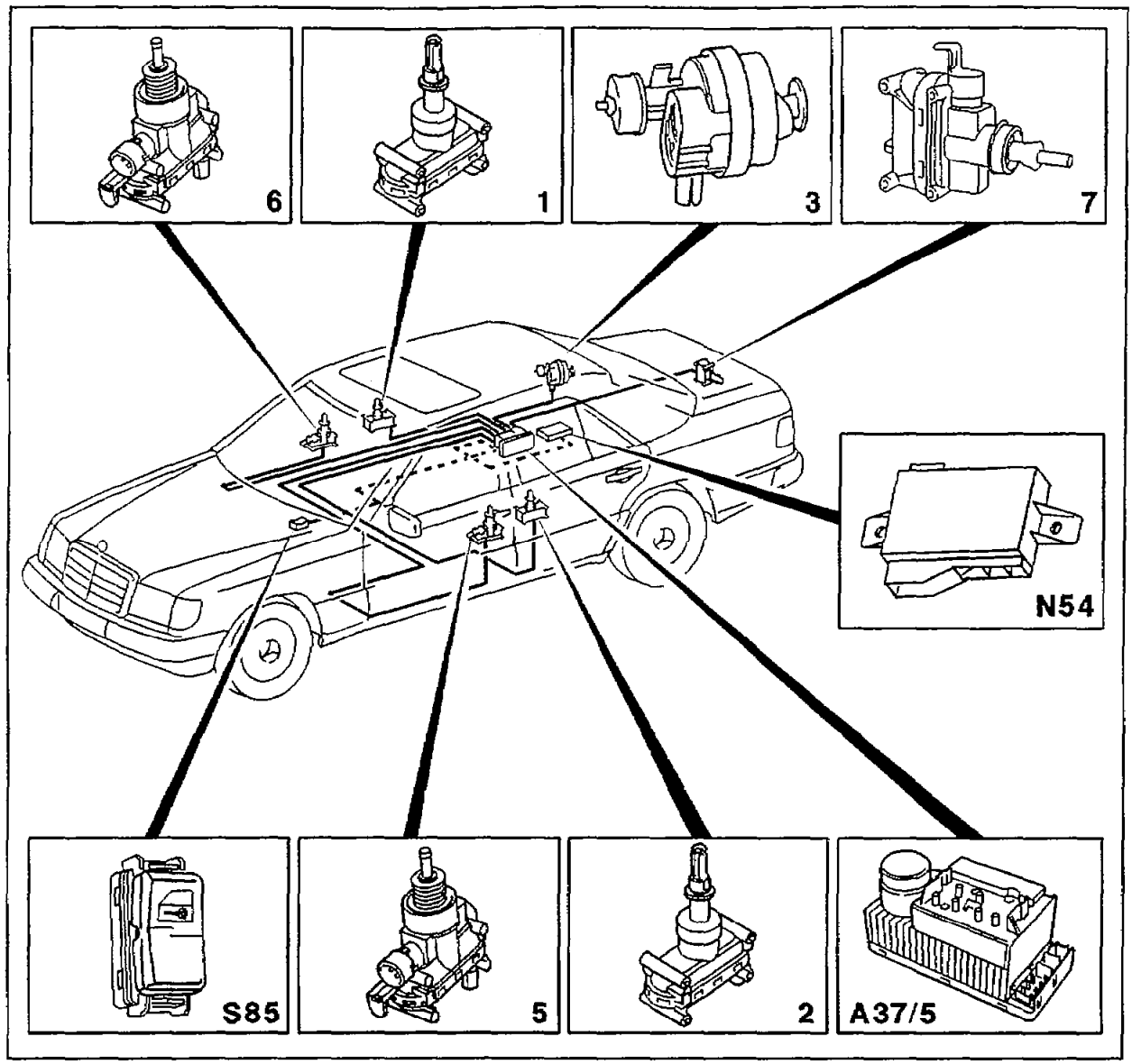

P80-5232-59

1	Right rear door actuator	A37/5	Pneumatic control unit
2	Left rear door actuator	N54	Infrared remote control unit for central locking system
3	Tank flap actuator	S85	Interior central locking system switch
5	Left front door actuator	——	Pneumatic line
6	Right front door actuator	- - - -	Electric lead
7	Trunk lid actuator		

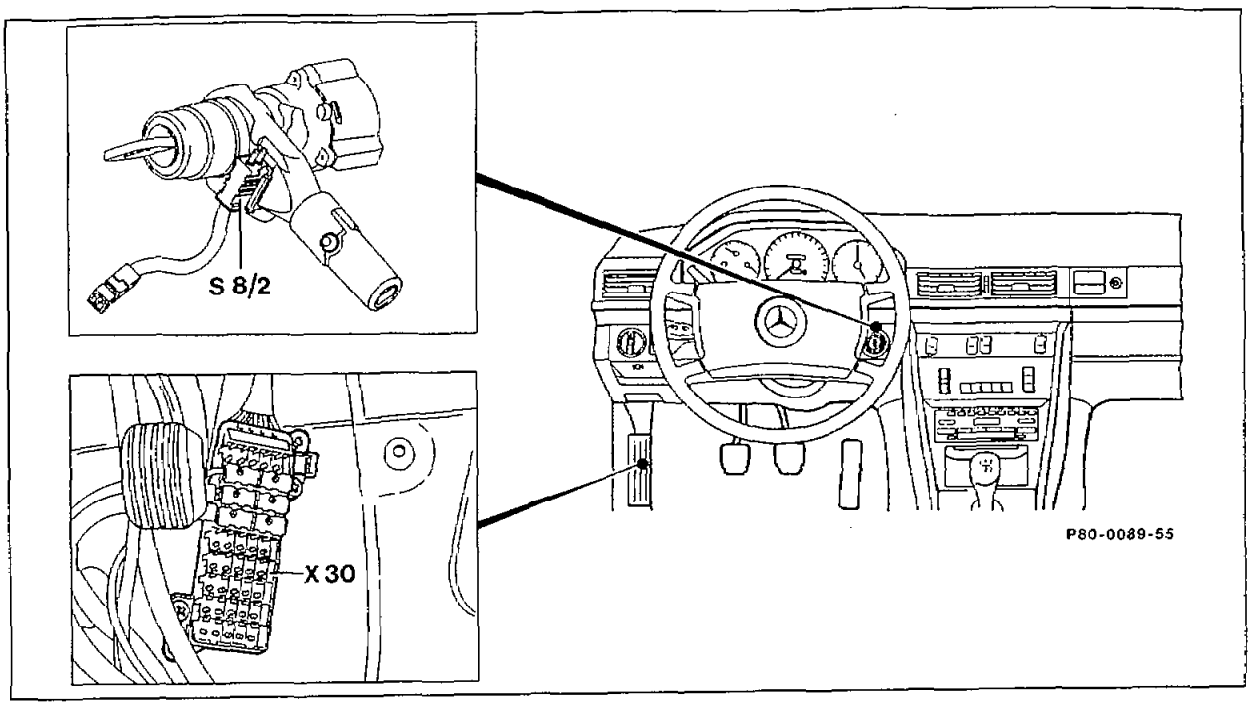

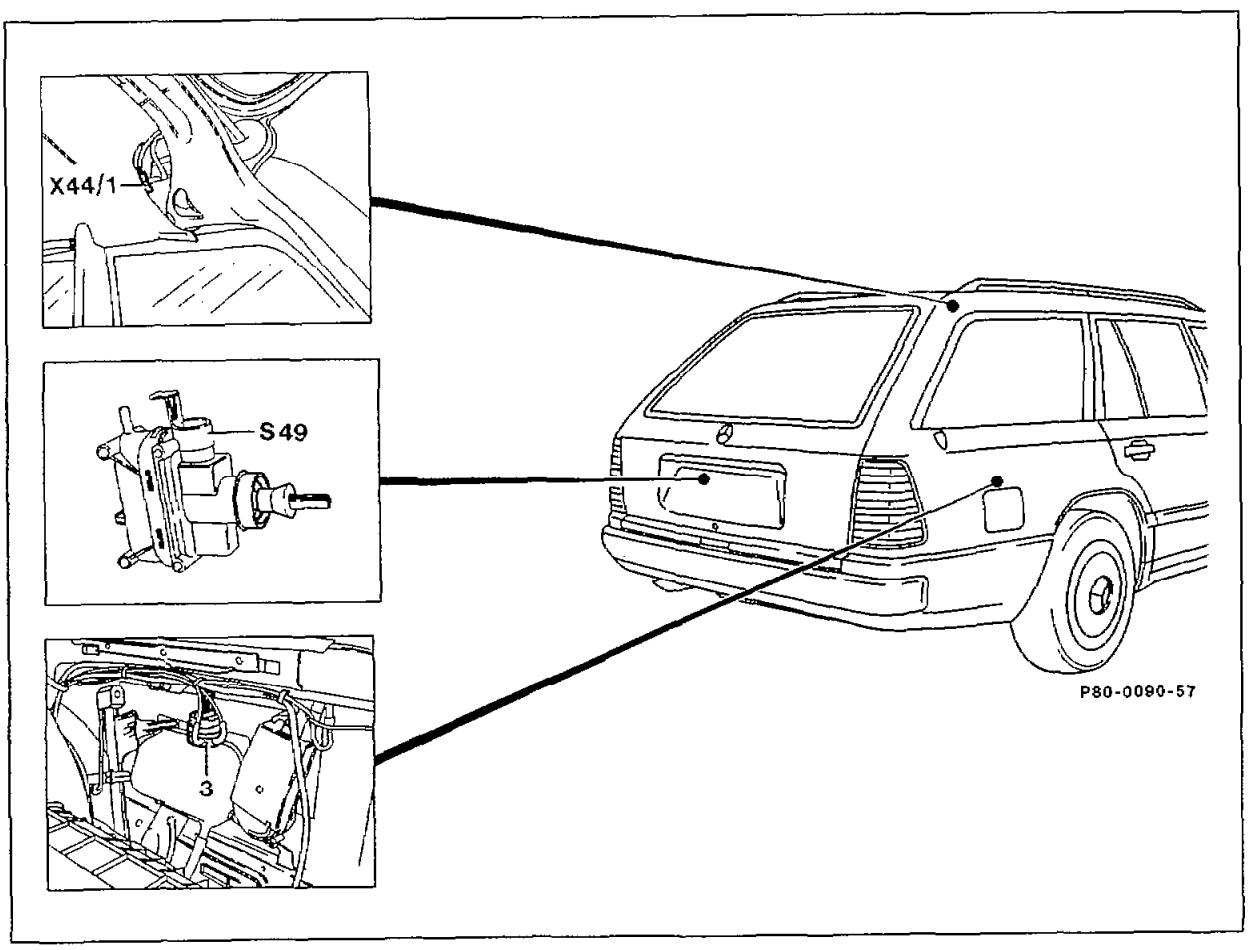

3	Fuel filler flap actuator	X30	Connector plug for optional electrical equipment
S8/2	Lighting/central locking system warning buzzer contact	X44/1	Connector, central locking system/trunk lock
S49	Tailgate actuator		

The central locking system with multipoint operation is based on the central locking system with single door operation. The car can be locked or be unlocked centrally from the driver's and front passenger's door and from the trunk lid or tailgate by operating the key or the locking pin. The central locking system includes all the doors, the trunk lid or tailgate and the fuel filler flap.

B. Operation

1. Version except (D) as of 03/94 and vehicles with code 885

Driver's door
The central locking system can be operated at any time when the driver's door is closed. From the outside with the key (turn to the right as far as stop to lock, turn to the left as far as a stop to unlock), from the inside by pressing down the locking pin or pulling the handle in the door trim.

Front passenger's door
The central locking system can be operated from the closed or opened front-passenger's door with the key or with the locking pin or handle (as the driver's door). The car can only be locked centrally, if the ignition key has been withdrawn or, after being withdrawn, has been re-inserted but not operated (key in position 0 in steering lock). This prevents the user inadvertently being locked out by operating the system from the front passenger's door with the key in position 1 and 2 or from the tailgate of Station Wagon.

Trunk lid (Sedan only)
The central locking system can be operated with the key when the trunk lid is opened or closed.

To unlock:
Turn key to the left as far as a stop and withdraw in vertical position.

To lock:
Turn key to right as far as the stop and withdraw in vertical position.

Additional lock:
Turn key to right as far as a stop and withdraw in horizontal position. The trunk lid now remains locked even when the doors are unlocked centrally.

Tailgate (Station Wagon only)
To unlock:
Turn key to the left as far as a stop and withdraw in vertical position.

To lock:
Turn key to the right as far as a stop and withdraw in vertical position. Car is locked and tailgate is additionally secured. When the central locking system is unlocked from one of the front doors, the tailgate remains locked. The additional interlock of the tailgate can only be cancelled at the tailgate by turning the key to the left as far as a stop or by opening the tailgate with the handle. On cars in (AUS) and (USA) version the locking pin must be withdrawn in place of opening with the handle.

The locking pin in the tailgate indicates whether the car is locked or unlocked.

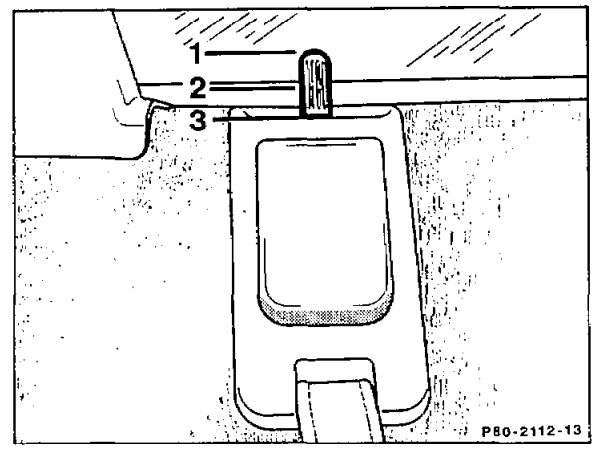

Position 1 = Car unlocked
Position 2 = Car locked from front door
Position 3 = Car locked from tailgate
(tailgate is additionally secured)

Note
If the trunk lid or tailgate of a centrally locked car is unlocked, all the doors and the fuel filler flap are also unlocked. After closing the trunk lid or tailgate, the car must again be locked centrally.

Manual release of fuel filler flap
If the central locking system fails, the fuel filler flap can be unlocked manually by operating a red manual release button on the fuel filler flap actuator.

2. Version for (D) only as of 03/94 and vehicles with code 885

The central locking system, anti-theft warning system and convenience feature can now only be controlled with the infrared remote control for the central locking system (IFZ).

C. Function

1. Version except (D) as of 03/94 and vehicles with code 885

Sequence of functions as illustrated by unlocking car at driver's door

When the key is turned to the left in the lock cylinder, the electric switch in the actuator is switched over by means of a linkage. This switch then passes a positive voltage along its control lead to the supply pump.
The supply pump operates and generates an overpressure which passes along a system of lines to all the pneumatic actuators.
The diaphragms in the actuators are pushed up, operate the locks via a linkage and unlock them.
The fuel filler flap actuator unlocks the flap directly. At the same time, the electric switches of the actuator in the front passenger's door and in the trunk lid are also switched over by the pneumatic element of the actuator and like the mechanically operated switch in the driver's door actuator, also supply a positive voltage to the supply pump.

Once a pressure of approx. 450 mbar has been reached in the system, a pressure switch switches off the supply pump.
Air is again released from the pneumatic line system and from the actuator through the supply pump – the system is pressureless and the unlocking operation is completed.

The locking operation proceeds in a similar manner to the unlocking operation. However, the supply pump is actuated by a negative control voltage, the direction of rotation of the pump motor is reversed, thus producing the vacuum required for locking.

Function diagram

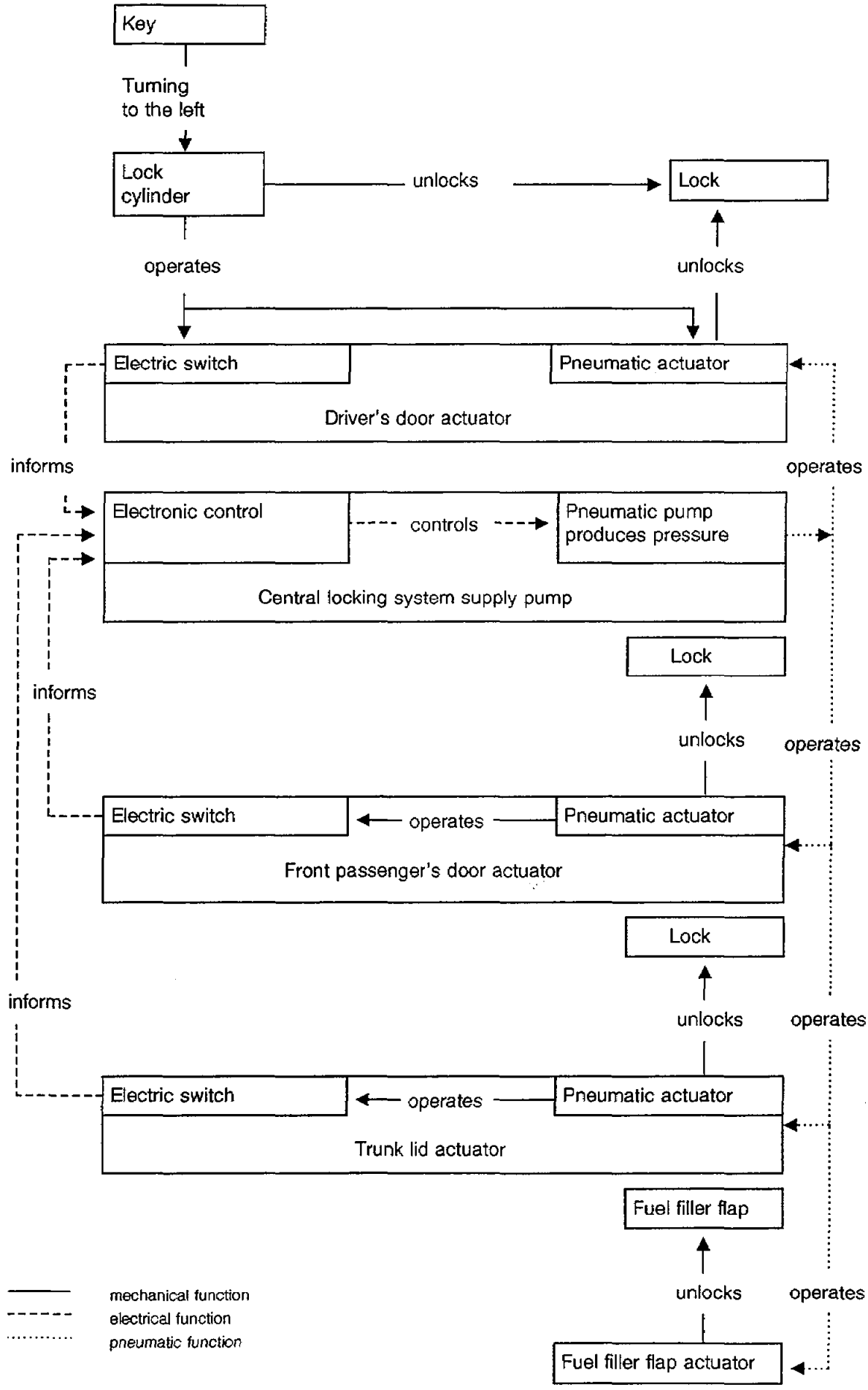

2. Version for (D) only as of 03/94 and vehicles with code 885

As of 03/94 the infrared remote control for the central locking system (IFZ) is a standard feature. The central locking system pump as well as the control unit for the infrared remote control are the same as for model series 202 in terms of the design and function. Since the central locking system actuators are no longer connected electrically, the central locking system, anti-theft warning system and convenience feature can no longer be actuated with the mechanical key. On vehicles with anti-theft warning system an alarm is tripped on vehicles locked with the infrared remote control when they are unlocked with the mechanical key. Moreover, the standard immobilizer can only be activated and deactivated with the infrared remote control for the central locking system.

D. Components

Supply pump (M14/1)
1st version, Sedan up to approx. 04/86, Station Wagon up to approx. 09/88.
The supply pump for multipoint operation has two electrical connections. In view of the modified electronic switching function, this supply pump cannot be interchanged with the supply pump used hitherto (single-door operation).

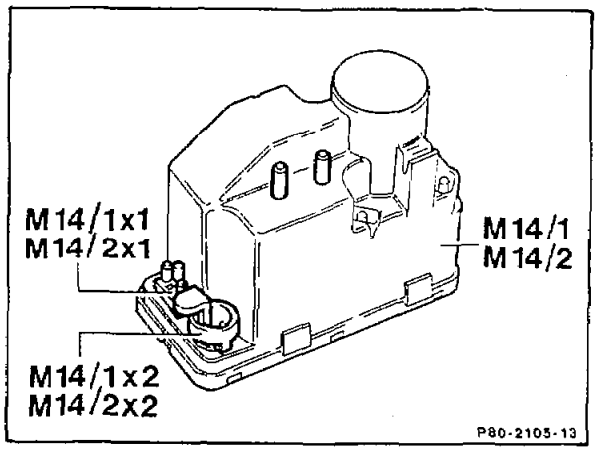

The supply pump is connected to positive (terminal 30) and the ground (terminal 31) through the 2-pin connection (M14/1x1, 3-pin on cars with orthopedic driver's backrest M14/2x1).

The actuators pass a negative control voltage during locking and a positive control voltage during unlocking through the connector (M14/1x2) to the supply pump.
The supply pump produces pressure for unlocking and vacuum for locking (approx. 500 mbar). If there is a severe leakage, the supply pump switches off after 25 – 150 s (safety switching time). The electronic control features several logic functions which avoid incorrect switching operations and faults.

2nd version from approx. 05/86 to approx. 09/88 (not for Station Wagon).
The control of the supply pump is equipped with a "full customer IC". This IC features not only the same functions as hitherto but also a fault current detection which prevents creep currents resulting in the system operating unintentionally. Instead, the control inputs affected are deactivated. The supply pump is recognizable from the light-coloured cover (arrow), hitherto black.

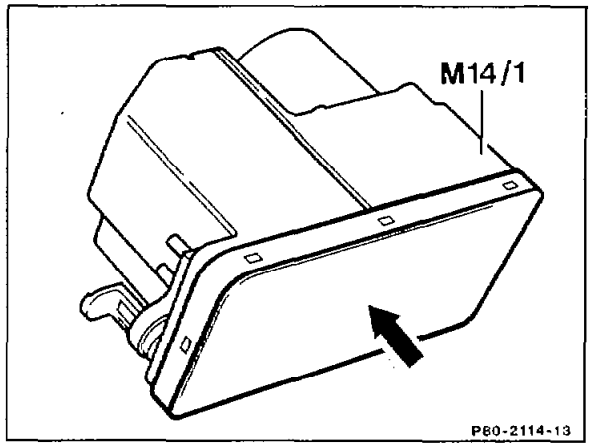

At the same time, the electrical wiring harness has been modified. The ground cable of the actuator for the trunk lid lock (S49) is now connected directly to the main ground point *(refer to wiring diagrams 80-800)*; hitherto to the lighting/central locking system warning buzzer contact (S8/2).
Production breakpoint as from
Vehicle Ident End No.:
A 245572.
The modified supply pump may not be fitted to cars with a lower Vehicle Ident End No. The previous version remains valid for such cars.

3rd version as from 10/88
To enhance the comfort features, the supply pump of the central locking system is replaced by an enhanced-performance version. It can be interchanged with the previous version. The distinguishing feature of pump with black cover for Model 124 Station Wagon and pump with light- coloured cover for all other models remains unchanged.
Production breakpoint as from
Vehicle Ident End No.:
A 875395
F 092086

4th version with infrared remote control as of approx. 09/92.
This supply pump has an additional electrical plug connection (M14/1x3, M14/2x3) for the control by the infrared remote control unit.

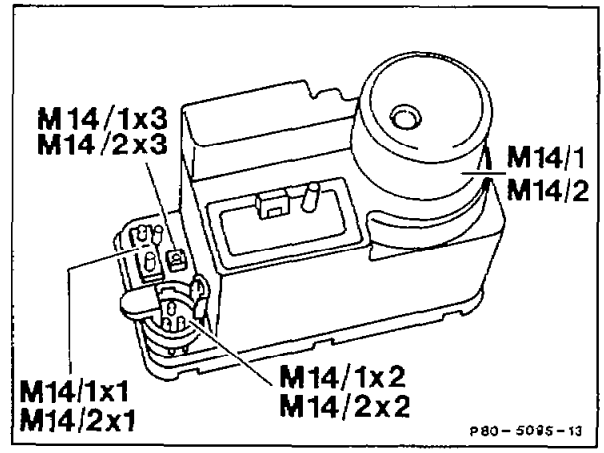

5. Version for (D) only as of 03/94 and vehicles with code 885

With introduction of the immobilizer the pneumatic control unit (PSE) is installed in combination with the control unit for the infrared remote control used on model series 202. See diagnosis manual for diagnosis on pneumatic control unit (PSE) and infrared remote control.

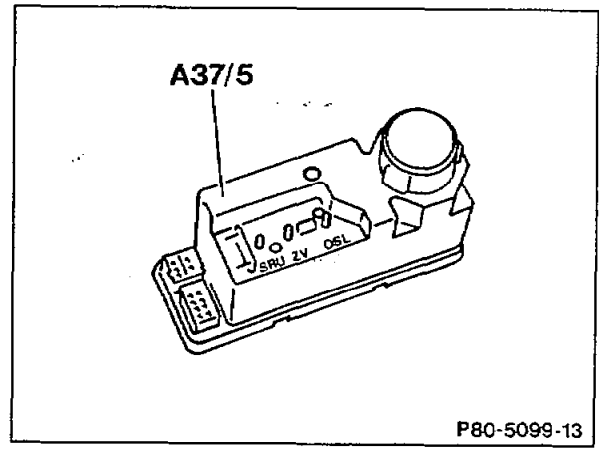

Technical data of supply pump

		from approx. 10.88	up to approx. 09/88
Pressure cutoff point	(mbar)	approx. 650	approx. 500
Switching time	(s)	approx. 1	approx. 3
Safety switching time	(s)	25 – 30	25 – 150
Power consumption	(A)	max. 7.5	max. 3.5
Air admission/release time	(s)	approx. 10	approx. 10

Actuator (S47, S48, S49)

A combined actuator is fitted to both front doors and the trunk lid or tailgate. This actuator has an electrical and a pneumatic connection (arrows)..

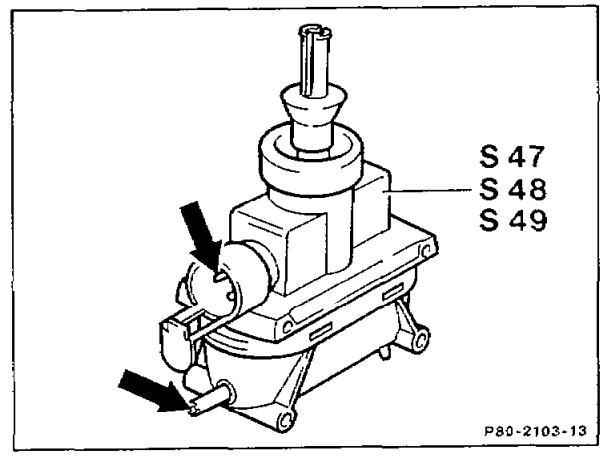

1st version up to approx. 08/90

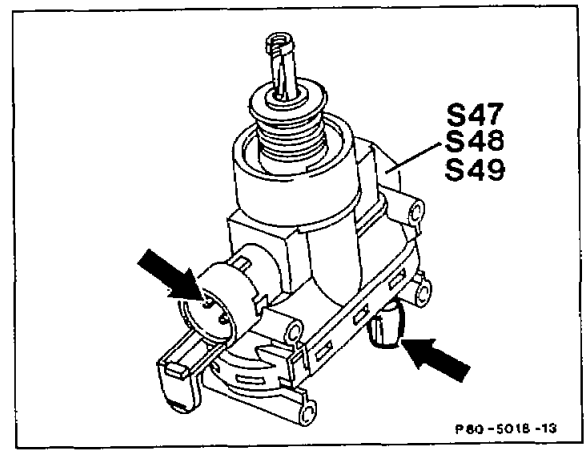

2nd version as of approx. 09/90

The actuators of the front doors and tailgate differ externally from the trunk lid actuator in having different colour coding (refer to table on p. 11). When performing repairs, the actuator must not be confused as a harder cup seal is used on the trunk lid actuator for locating the top and bottom end stop.

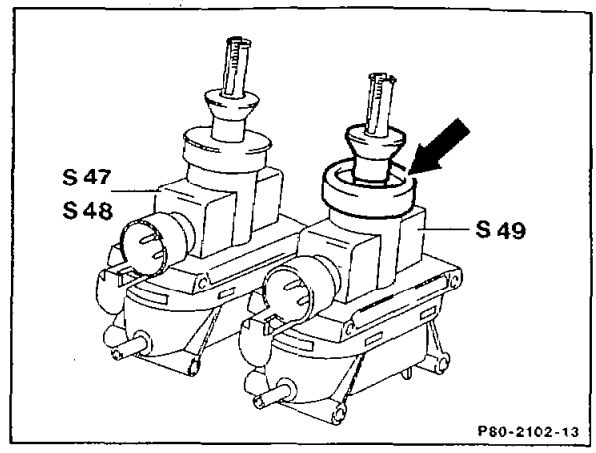

S47 Front left door actuator
S48 Front right door actuator
S49 Trunk lid actuator (tailgate)

Trunk lid lock actuator S49 (coupé and cabriolet)

The electrical pneumatic operation corresponds to the actuator used in the Sedan. The cup seal on the actuating rod is eliminated.

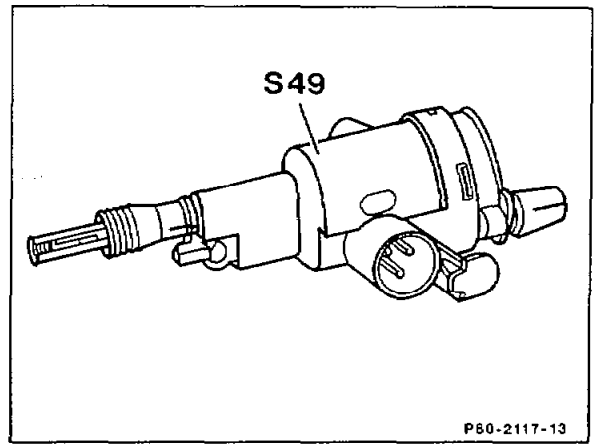

The actuator is clipped to the cover (a) (screwed on for Sedan).

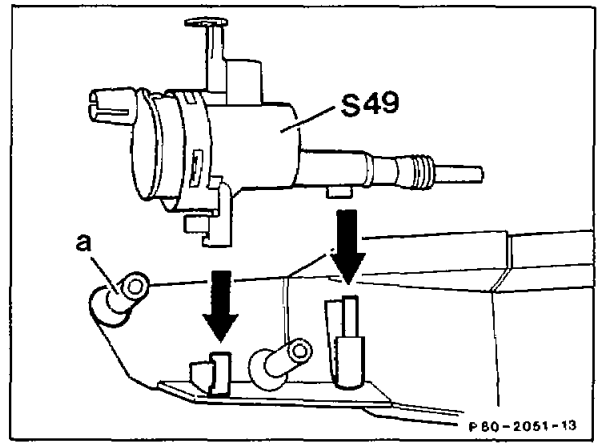

Note

As of 03/94 the actuators are no longer connected electrically on vehicles for (D) and vehicles with code 885 and therefore operate as purely pneumatic elements.

Distinguishing features of actuator (S47, S48, S49)

	Colour			Installation point		
Manufacturer	Housing	Sliding sleeve	Cup seal	Driver's door Tailgate	Trunk lid Sedan	Trunk lid Coupé, Cabriolet
Bosch	black	black	black	•		
	black	yellow	black		•	
Hella	black	black	black	•		
	black	black	red		•	
	white	black	black	•		
	white	black	red		•	
Woco	black	black	black	•		
	black	black	white or red		•	
Woco [1]	black	black	black		•	•
Alfmeier	black	black	–			•

[1] Red shift rod mounting, for vehicles with trunk lid auxiliary locking device only

The electrical and pneumatic operation of all the actuator is identical. Positive and ground are supplied constantly to the electrical switch in the top part of the actuator. The two-way switch passes a positive control voltage for unlocking and a negative control for locking to the supply pump.

The bottom chamber of the element is pressurized for unlocking and a vacuum created for locking.

The electrical and pneumatic parts of the actuator can be separated by a sliding sleeve with detent to enable the lock to also be operated when the actuator is still pressurized or when a vacuum exists.

Sliding sleeve lock (phased in from approx. 12/86)

An integrated support (arrow) prevents the position of the sliding sleeve (a) from being altered. When the connecting rod to the lock is inserted, this overrides the support.
As a result, the element is in the installation position. Positioning faults at the door actuator are then no longer possible.

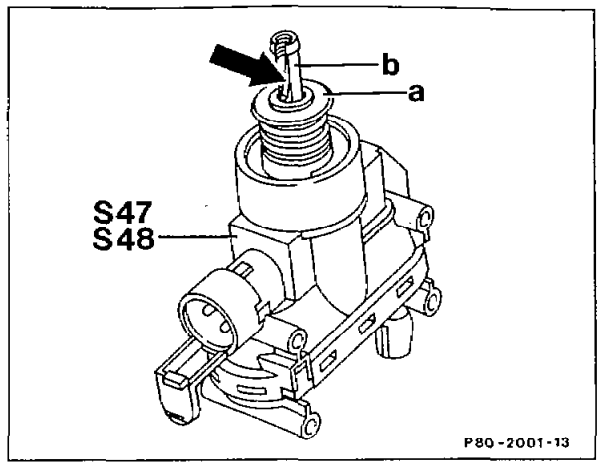

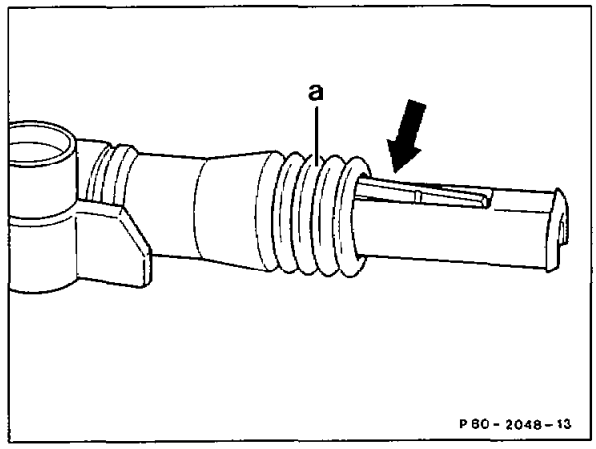

Rear door actuator

The rear door actuator is fitted with a pneumatic connection. The bottom chamber of the actuator is pressurized for unlocking and a vacuum created for locking. The pneumatic line is fixed in place by a clip (arrow) on the underside of the housing.

1st version up to approx. 08/90

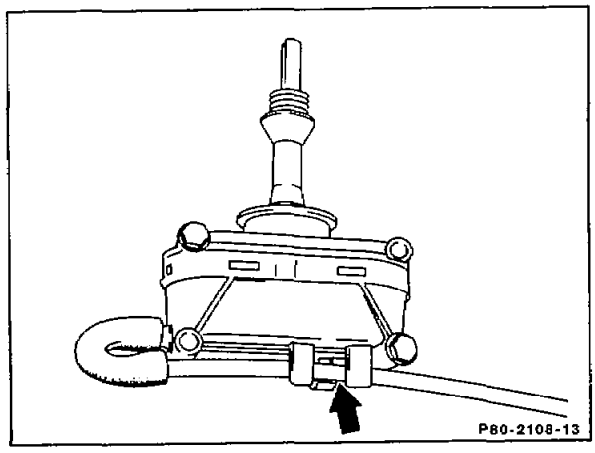

2nd version as of approx. 09/90

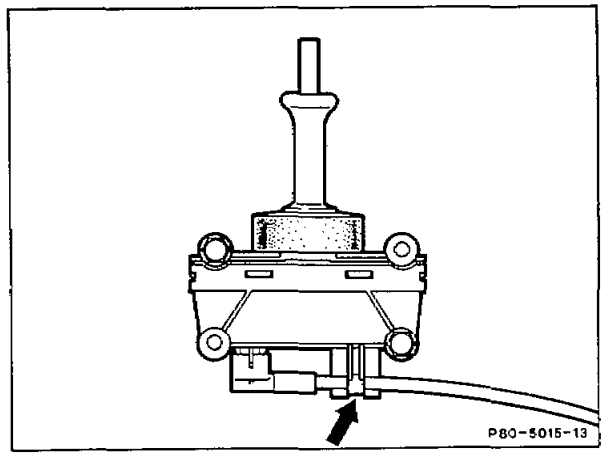

Fuel filler flap actuator

1st version up to approx. 03/85

The designed operation of this actuator corresponds to the rear door actuator, although it fitted with a harder cup seal for positioning the top and bottom end stop.The sliding sleeve can be distinguished by its yellow colour.

2nd version from approx. 04/85 to approx. 03/87 (Sedan only)

Actuator as 1st version but with anti-theft lock (a) and linkage guide (arrow). The anti-theft lock prevents the actuator being unlocked manually via the full filler flap.

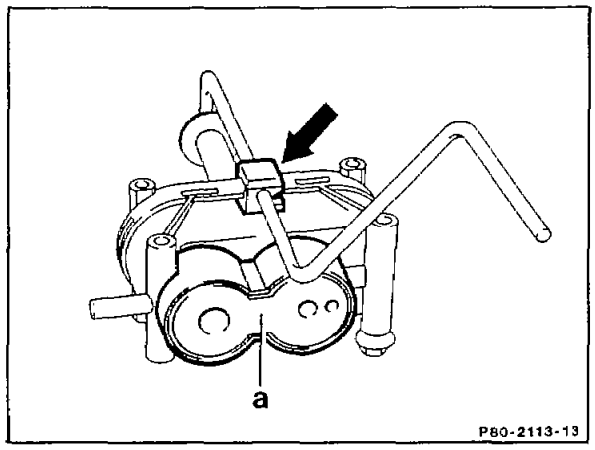

3rd version

Model 124 Sedan from approx. 04/87, A 490369

Model 124 Station Wagon and Coupé from start of production.

Clip-fit element with direct locking linkage, anti-theft lock and manual release button.

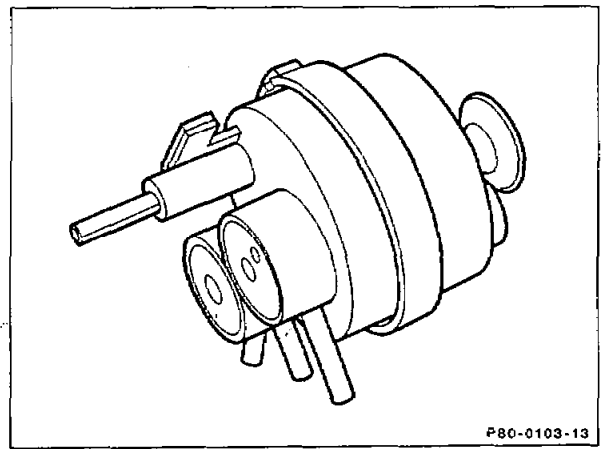

4th version as of approx. 09/90
Clip-fit pneumatic actuator with direct locking linkage, anti-theft device and emergency unlocking button.
A valve in the actuator prevents the locking linkage from being pushed back manually via the fuel filler flap. The guide bush (6) covers the locking linkage and prevents water coming into contact with the linkage which can result in the actuator icing up in winter.

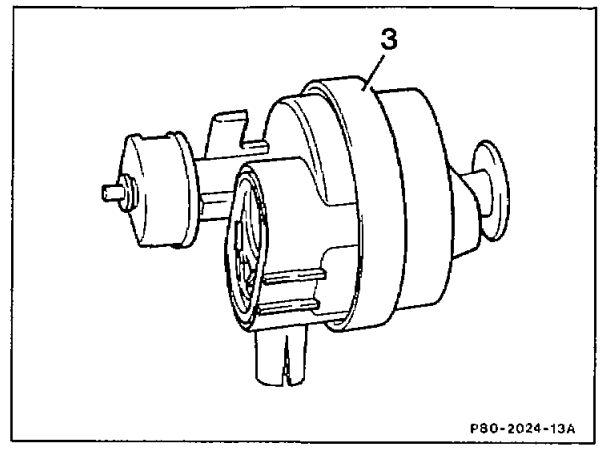

Warning buzzer contact, exterior lamps/central locking system (S8/2), (except vehicles for (D) as of 03/94 and vehicles with code 885)
This switch on the steering lock interrupts the ground cable to the actuator in the right front door (left door on RHD) if the ignition key is in position 1 or 2 in the steering lock. In addition the ground supply to the trunk lid actuator is also interrupted on Model 124 Sedan from approx. 05/85 to approx. 04/86 and on Model 124 Station Wagon from start of production.

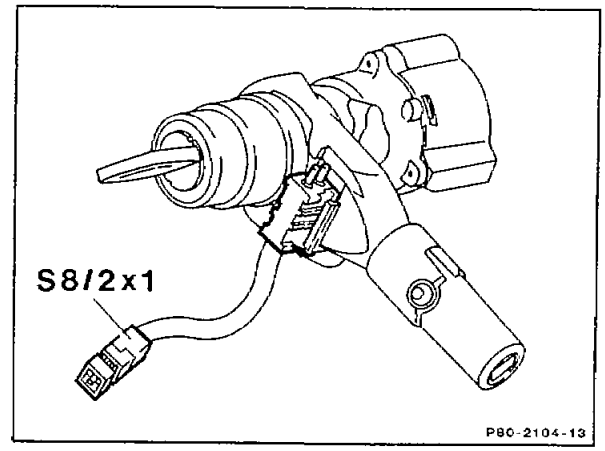

Wiring harness with replaceable connectors (coupé and cabriolet)

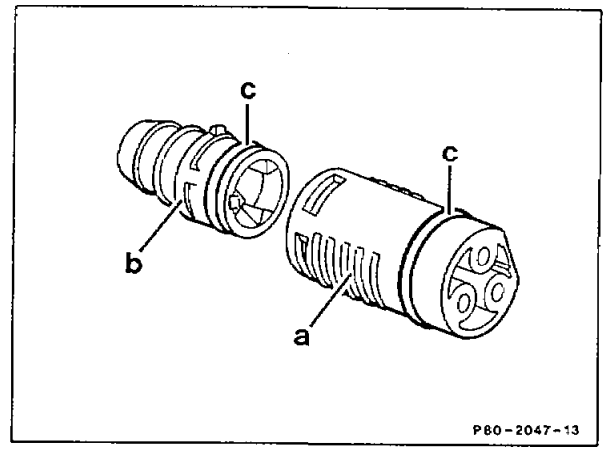

a Front part of connector
b Rear part of connector
c O-ring

Interior central locking system switch (S85) ((D) only as of 03/94 and vehicles with code 885)

Vehicles unlocked with the infrared remote control can be locked and unlocked centrally with a switch in the center console.

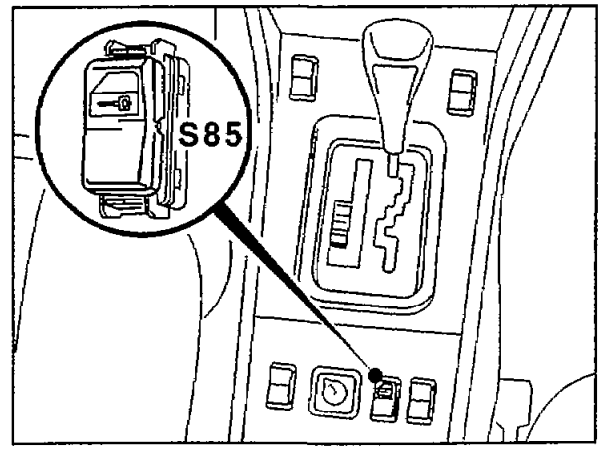

P80-5233-13

Pneumatic lines with quick-fit connections
In September 1988 pneumatic lines were, and will be as of approx. 09/90, fitted with quick-fit connections which run directly from a 6-point distributor at the supply pump to the pneumatic actuators. The distributors in the front left and front right footwell are therefore not fitted.

Cars affected

Model	Vehicle Ident End No. from	to
124	1A 861403 1F 097724 and across the range as of approx. 09/90	1A 866954 1F 098305

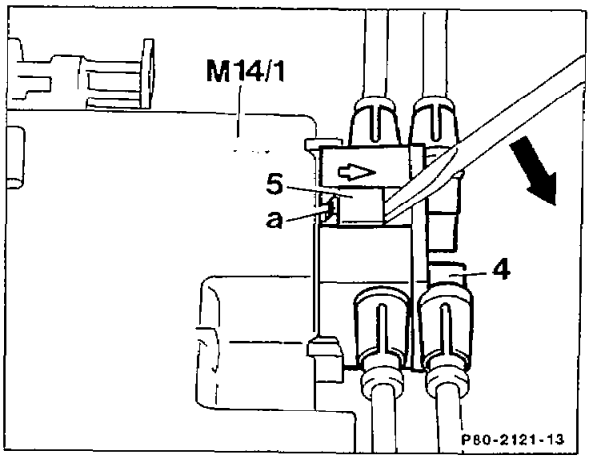

4 6-point distributor
5 Locking device
M14/1 Central system locking supply pump
a Pull-off lock

All pneumatic lines are fitted with a plug at their end which engages in the pneumatic connecting bush of the actuator.

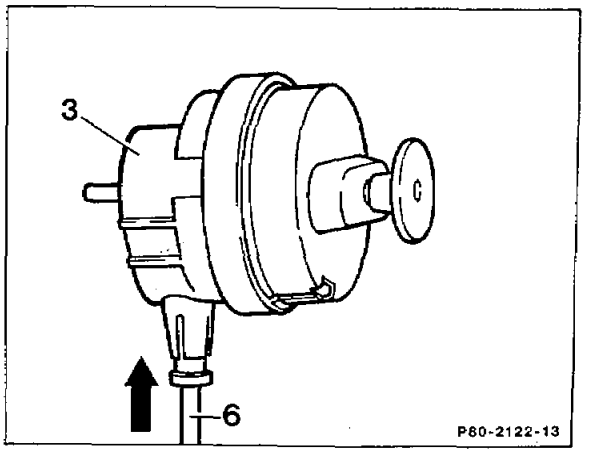

3 Fuel filler flap actuator
6 Pneumatic line

The ends of the pneumatic lines are marked. The markings indicate to which pneumatic actuator the line belongs.

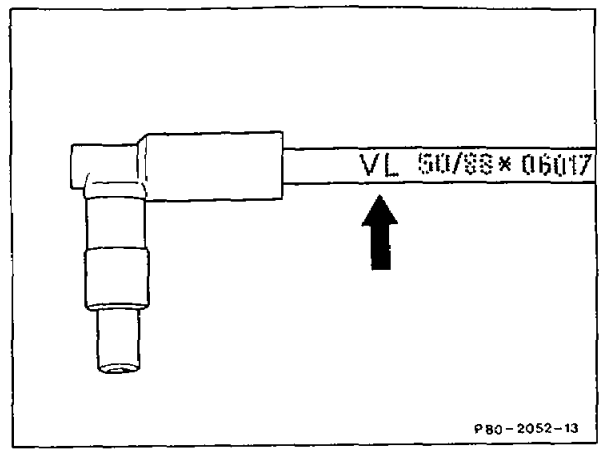

Marking	Actuator
VL	Left front door actuator
VR	Right front door actuator
HL	Left rear door actuator
HR	Right rear door actuator
HD	Trunk lid lock actuator
KE	Fuel filler flap actuator

A. General

1st version up to approx. 08/90

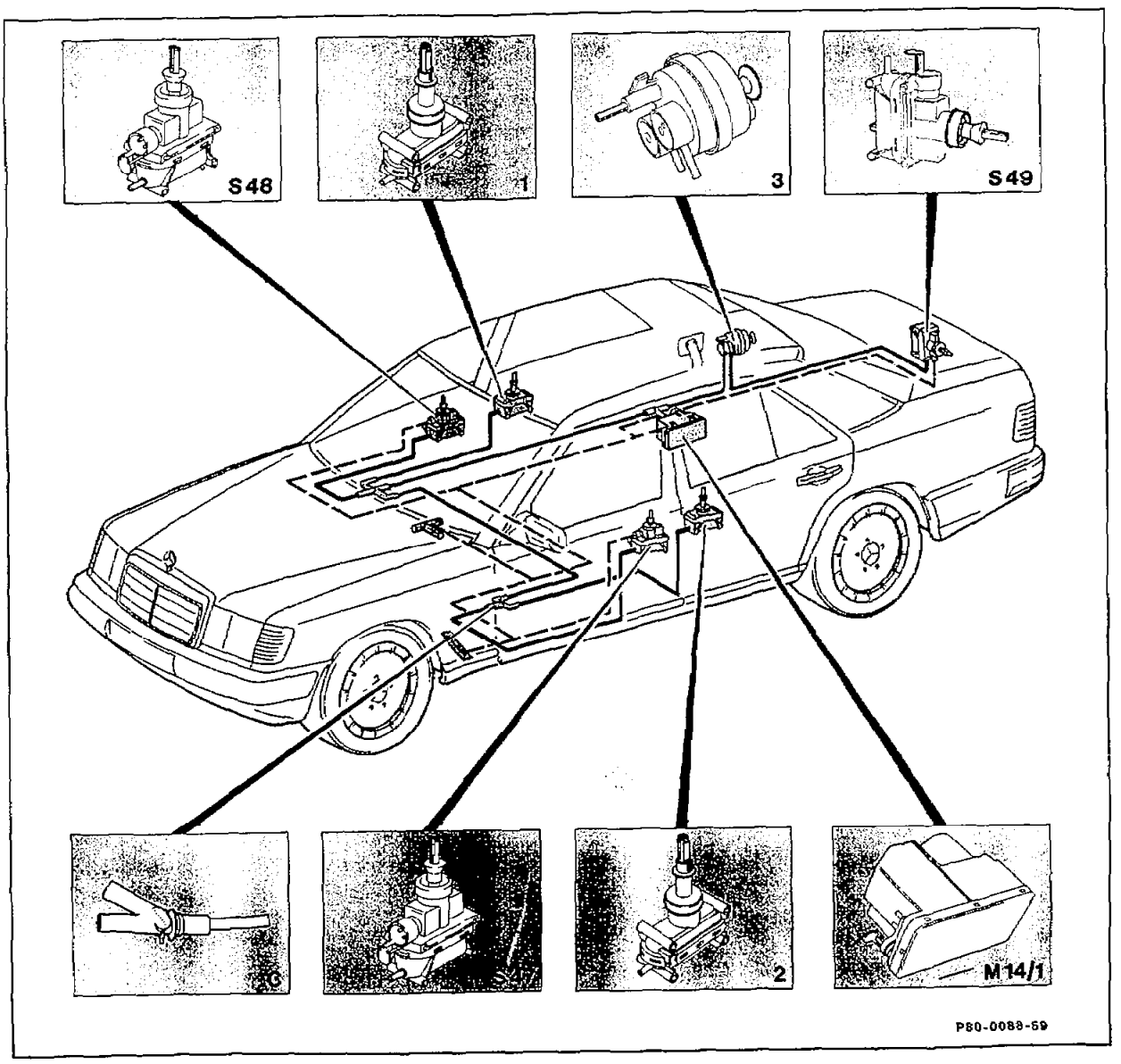

1	Right rear door actuator	M14/1	Central locking system supply pump
2	Left rear door actuator	S47	Front left door actuator
3	Fuel filler flap actuator	S48	Front right door actuator
C	Distributor	S49	Trunk lid actuator
- - - -	Electric lead	——	Pneumatic line

2nd version as of approx. 09/90

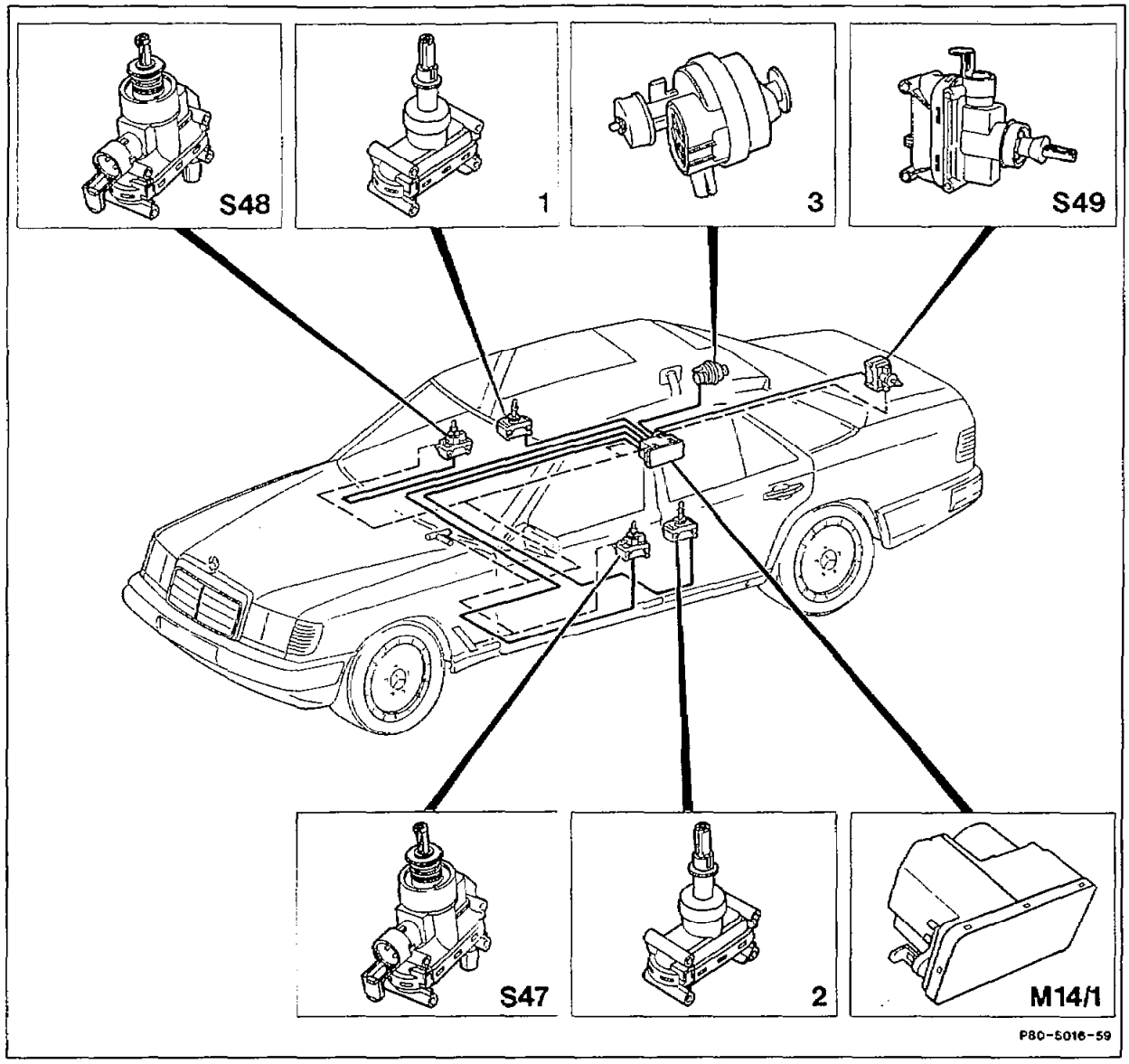

1	Right rear door actuator	M14/1	Supply pump, central locking system (ZV)
2	Left rear door actuator	S47	Left front door actuator
3	Fuel filler flap actuator	S48	Right front door actuator
- - - -	Electric lead	S49	Trunk lid lock actuator
		——	Pneumatic line

3. Version for (D) only as of 03/94 and vehicles with code 885

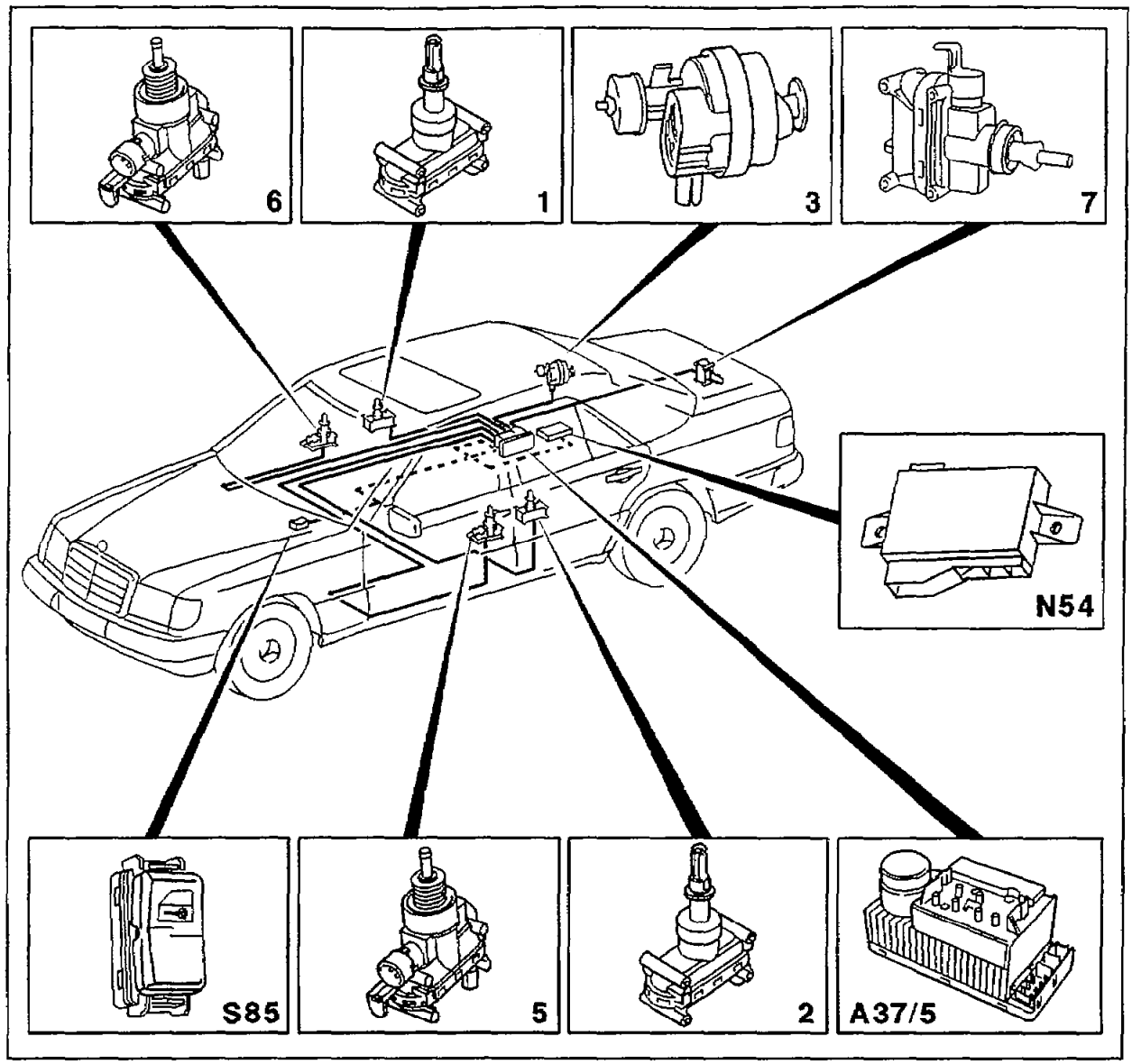

P80-5232-59

1	Right rear door actuator	A37/5	Pneumatic control unit
2	Left rear door actuator	N54	Infrared remote control unit for central locking system
3	Tank flap actuator	S85	Interior central locking system switch
5	Left front door actuator	——	Pneumatic line
6	Right front door actuator	- - - -	Electric lead
7	Trunk lid actuator		

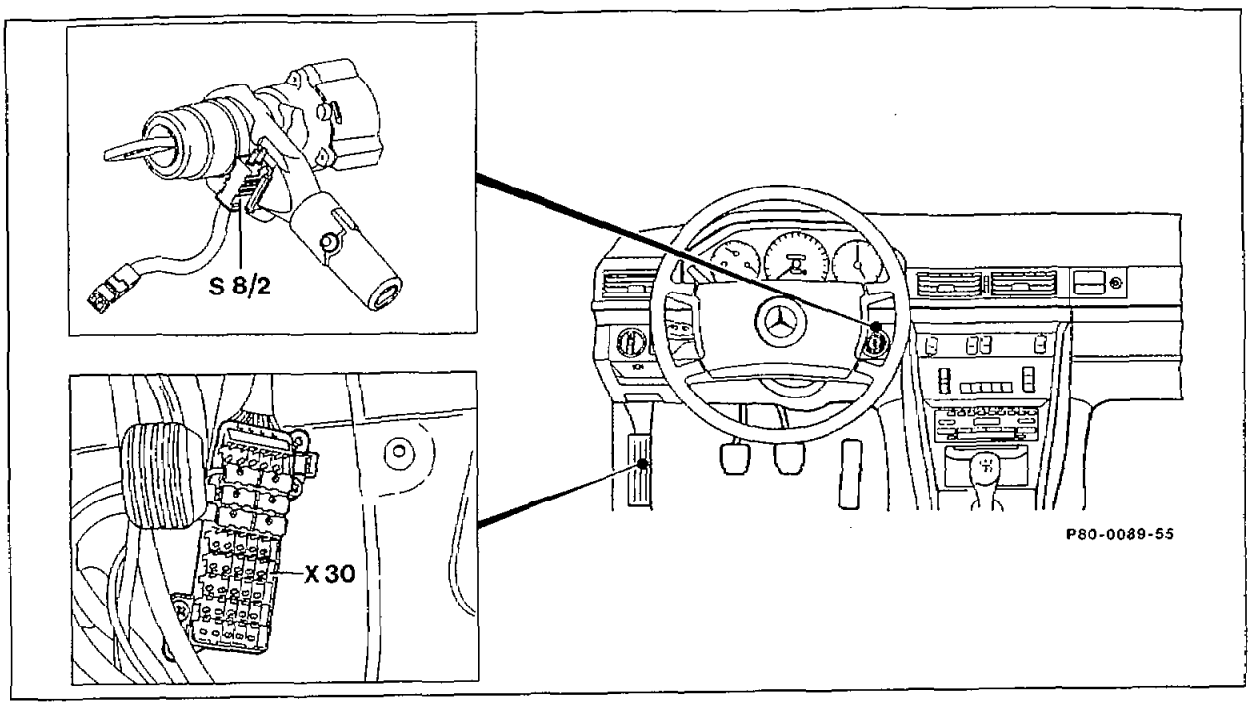

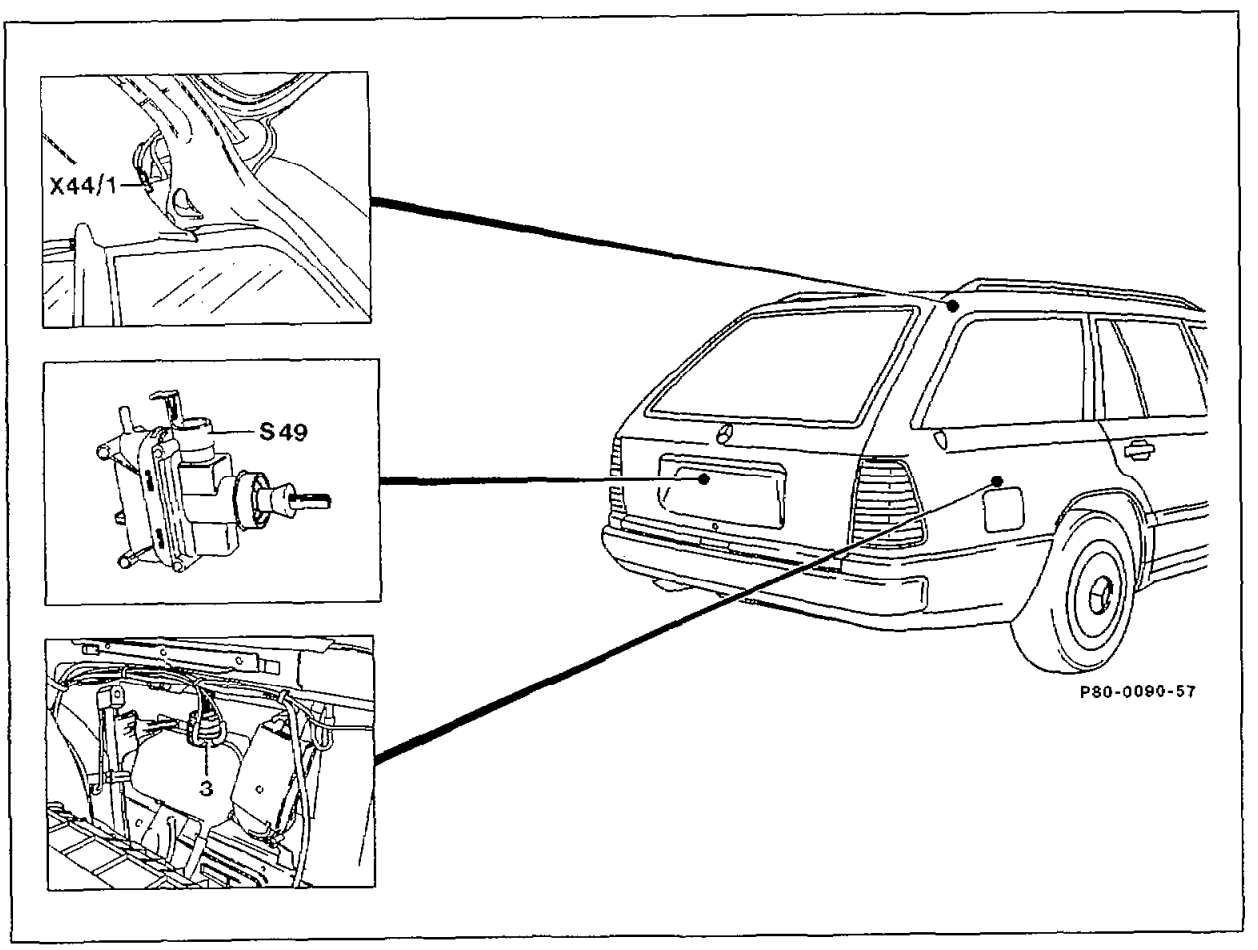

3	Fuel filler flap actuator	X30	Connector plug for optional electrical equipment
S8/2	Lighting/central locking system warning buzzer contact	X44/1	Connector, central locking system/trunk lock
S49	Tailgate actuator		

The central locking system with multipoint operation is based on the central locking system with single door operation. The car can be locked or be unlocked centrally from the driver's and front passenger's door and from the trunk lid or tailgate by operating the key or the locking pin. The central locking system includes all the doors, the trunk lid or tailgate and the fuel filler flap.

B. Operation

1. Version except (D) as of 03/94 and vehicles with code 885

Driver's door
The central locking system can be operated at any time when the driver's door is closed. From the outside with the key (turn to the right as far as stop to lock, turn to the left as far as a stop to unlock), from the inside by pressing down the locking pin or pulling the handle in the door trim.

Front passenger's door
The central locking system can be operated from the closed or opened front-passenger's door with the key or with the locking pin or handle (as the driver's door). The car can only be locked centrally, if the ignition key has been withdrawn or, after being withdrawn, has been re-inserted but not operated (key in position 0 in steering lock). This prevents the user inadvertently being locked out by operating the system from the front passenger's door with the key in position 1 and 2 or from the tailgate of Station Wagon.

Trunk lid (Sedan only)
The central locking system can be operated with the key when the trunk lid is opened or closed.

To unlock:
Turn key to the left as far as a stop and withdraw in vertical position.

To lock:
Turn key to right as far as the stop and withdraw in vertical position.

Additional lock:
Turn key to right as far as a stop and withdraw in horizontal position. The trunk lid now remains locked even when the doors are unlocked centrally.

Tailgate (Station Wagon only)
To unlock:
Turn key to the left as far as a stop and withdraw in vertical position.

To lock:
Turn key to the right as far as a stop and withdraw in vertical position. Car is locked and tailgate is additionally secured. When the central locking system is unlocked from one of the front doors, the tailgate remains locked. The additional interlock of the tailgate can only be cancelled at the tailgate by turning the key to the left as far as a stop or by opening the tailgate with the handle. On cars in (AUS) and (USA) version the locking pin must be withdrawn in place of opening with the handle.

The locking pin in the tailgate indicates whether the car is locked or unlocked.

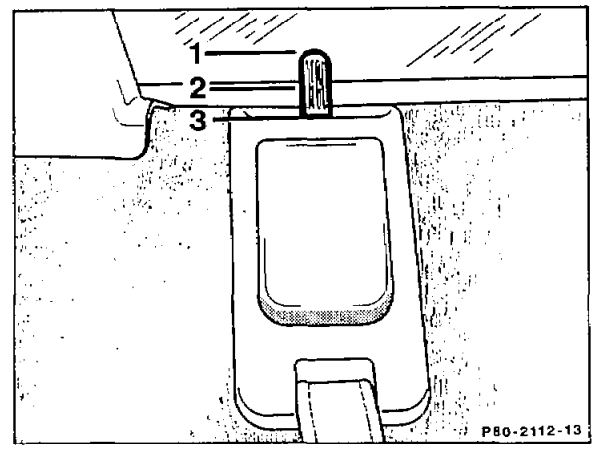

Position 1 = Car unlocked
Position 2 = Car locked from front door
Position 3 = Car locked from tailgate
(tailgate is additionally secured)

Note
If the trunk lid or tailgate of a centrally locked car is unlocked, all the doors and the fuel filler flap are also unlocked. After closing the trunk lid or tailgate, the car must again be locked centrally.

Manual release of fuel filler flap
If the central locking system fails, the fuel filler flap can be unlocked manually by operating a red manual release button on the fuel filler flap actuator.

2. Version for (D) only as of 03/94 and vehicles with code 885

The central locking system, anti-theft warning system and convenience feature can now only be controlled with the infrared remote control for the central locking system (IFZ).

C. Function

1. Version except (D) as of 03/94 and vehicles with code 885

Sequence of functions as illustrated by unlocking car at driver's door

When the key is turned to the left in the lock cylinder, the electric switch in the actuator is switched over by means of a linkage. This switch then passes a positive voltage along its control lead to the supply pump.
The supply pump operates and generates an overpressure which passes along a system of lines to all the pneumatic actuators.
The diaphragms in the actuators are pushed up, operate the locks via a linkage and unlock them.
The fuel filler flap actuator unlocks the flap directly. At the same time, the electric switches of the actuator in the front passenger's door and in the trunk lid are also switched over by the pneumatic element of the actuator and like the mechanically operated switch in the driver's door actuator, also supply a positive voltage to the supply pump.

Once a pressure of approx. 450 mbar has been reached in the system, a pressure switch switches off the supply pump.
Air is again released from the pneumatic line system and from the actuator through the supply pump – the system is pressureless and the unlocking operation is completed.

The locking operation proceeds in a similar manner to the unlocking operation. However, the supply pump is actuated by a negative control voltage, the direction of rotation of the pump motor is reversed, thus producing the vacuum required for locking.

Function diagram

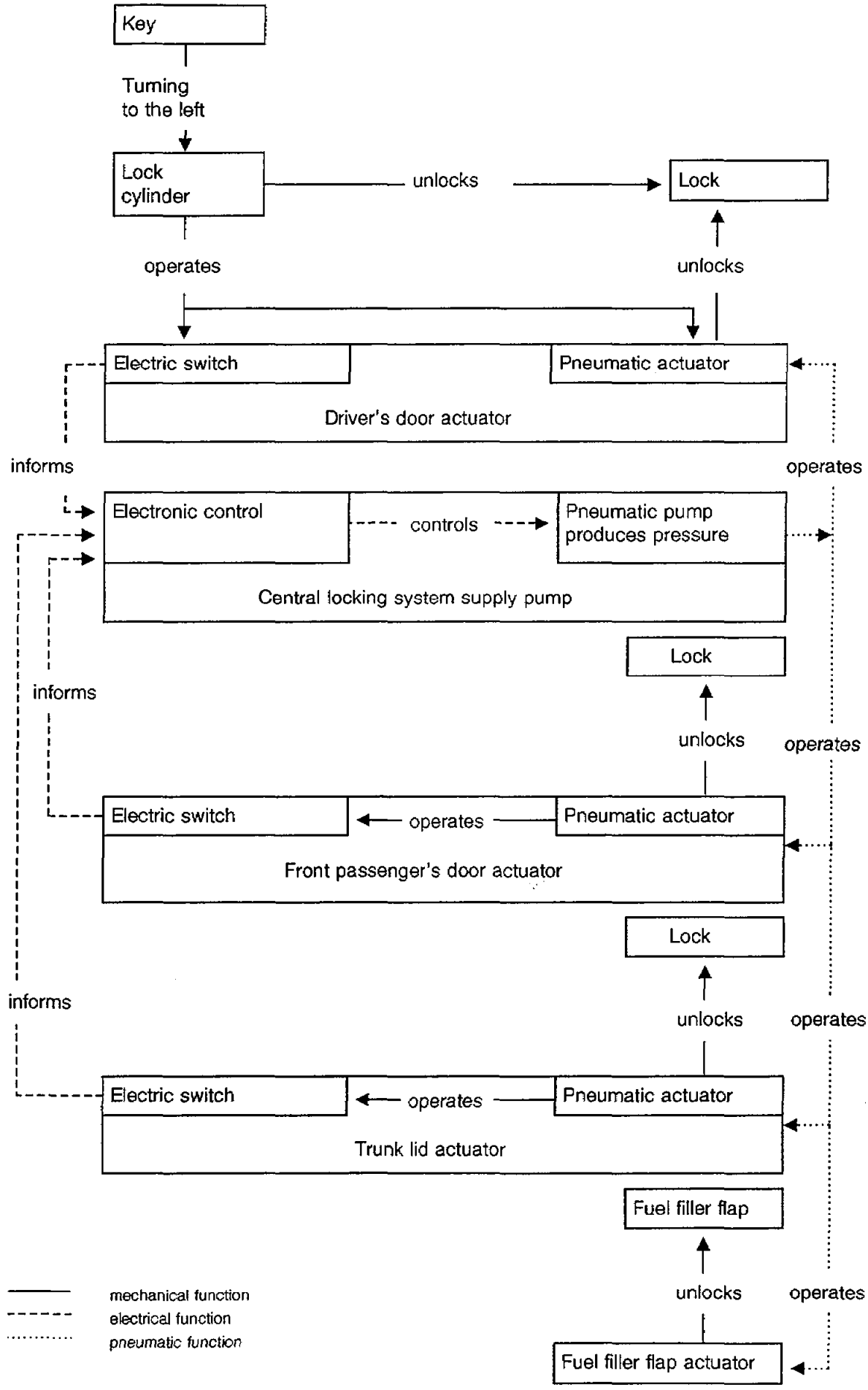

2. Version for (D) only as of 03/94 and vehicles with code 885

As of 03/94 the infrared remote control for the central locking system (IFZ) is a standard feature. The central locking system pump as well as the control unit for the infrared remote control are the same as for model series 202 in terms of the design and function. Since the central locking system actuators are no longer connected electrically, the central locking system, anti-theft warning system and convenience feature can no longer be actuated with the mechanical key. On vehicles with anti-theft warning system an alarm is tripped on vehicles locked with the infrared remote control when they are unlocked with the mechanical key. Moreover, the standard immobilizer can only be activated and deactivated with the infrared remote control for the central locking system.

D. Components

Supply pump (M14/1)
1st version, Sedan up to approx. 04/86, Station Wagon up to approx. 09/88.
The supply pump for multipoint operation has two electrical connections. In view of the modified electronic switching function, this supply pump cannot be interchanged with the supply pump used hitherto (single-door operation).

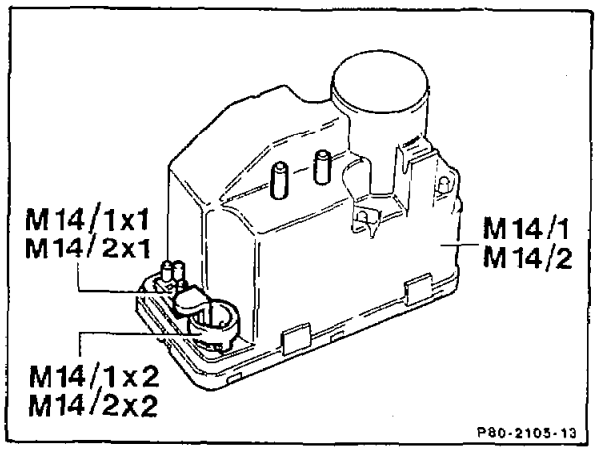

The supply pump is connected to positive (terminal 30) and the ground (terminal 31) through the 2-pin connection (M14/1x1, 3-pin on cars with orthopedic driver's backrest M14/2x1).

The actuators pass a negative control voltage during locking and a positive control voltage during unlocking through the connector (M14/1x2) to the supply pump.
The supply pump produces pressure for unlocking and vacuum for locking (approx. 500 mbar). If there is a severe leakage, the supply pump switches off after 25 – 150 s (safety switching time). The electronic control features several logic functions which avoid incorrect switching operations and faults.

2nd version from approx. 05/86 to approx. 09/88 (not for Station Wagon).
The control of the supply pump is equipped with a "full customer IC". This IC features not only the same functions as hitherto but also a fault current detection which prevents creep currents resulting in the system operating unintentionally. Instead, the control inputs affected are deactivated. The supply pump is recognizable from the light-coloured cover (arrow), hitherto black.

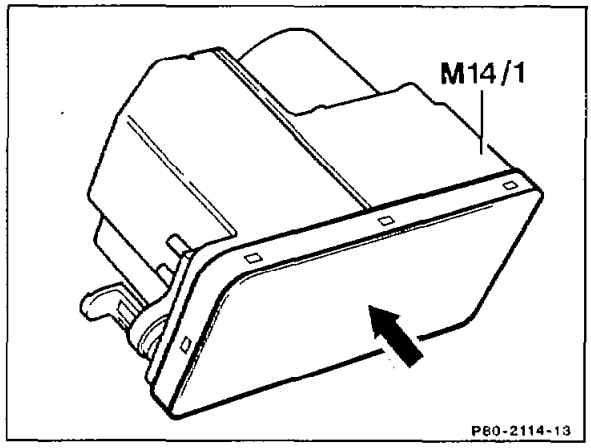

At the same time, the electrical wiring harness has been modified. The ground cable of the actuator for the trunk lid lock (S49) is now connected directly to the main ground point *(refer to wiring diagrams 80-800)*; hitherto to the lighting/central locking system warning buzzer contact (S8/2).
Production breakpoint as from
Vehicle Ident End No.:
A 245572.
The modified supply pump may not be fitted to cars with a lower Vehicle Ident End No. The previous version remains valid for such cars.

3rd version as from 10/88
To enhance the comfort features, the supply pump of the central locking system is replaced by an enhanced-performance version. It can be interchanged with the previous version. The distinguishing feature of pump with black cover for Model 124 Station Wagon and pump with light- coloured cover for all other models remains unchanged.
Production breakpoint as from
Vehicle Ident End No.:
A 875395
F 092086

4th version with infrared remote control as of approx. 09/92.
This supply pump has an additional electrical plug connection (M14/1x3, M14/2x3) for the control by the infrared remote control unit.

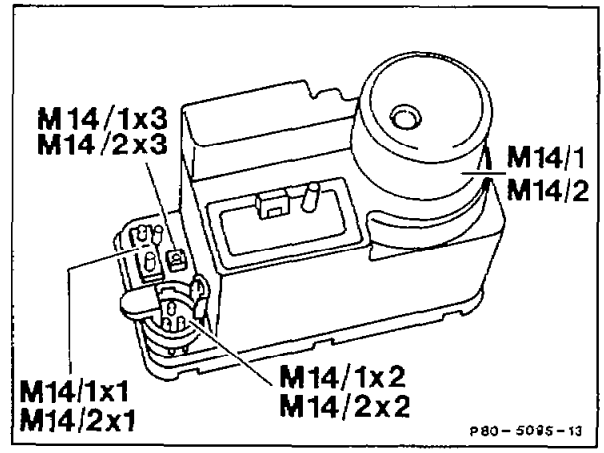

5. Version for (D) only as of 03/94 and vehicles with code 885

With introduction of the immobilizer the pneumatic control unit (PSE) is installed in combination with the control unit for the infrared remote control used on model series 202. See diagnosis manual for diagnosis on pneumatic control unit (PSE) and infrared remote control.

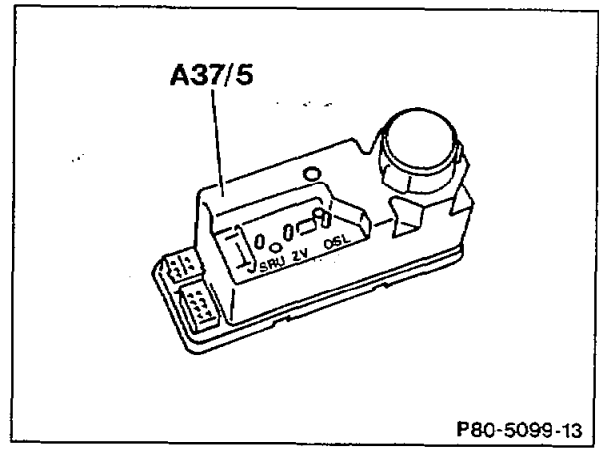

Technical data of supply pump

		from approx. 10.88	up to approx. 09/88
Pressure cutoff point	(mbar)	approx. 650	approx. 500
Switching time	(s)	approx. 1	approx. 3
Safety switching time	(s)	25 – 30	25 – 150
Power consumption	(A)	max. 7.5	max. 3.5
Air admission/release time	(s)	approx. 10	approx. 10

Actuator (S47, S48, S49)

A combined actuator is fitted to both front doors and the trunk lid or tailgate. This actuator has an electrical and a pneumatic connection (arrows)..

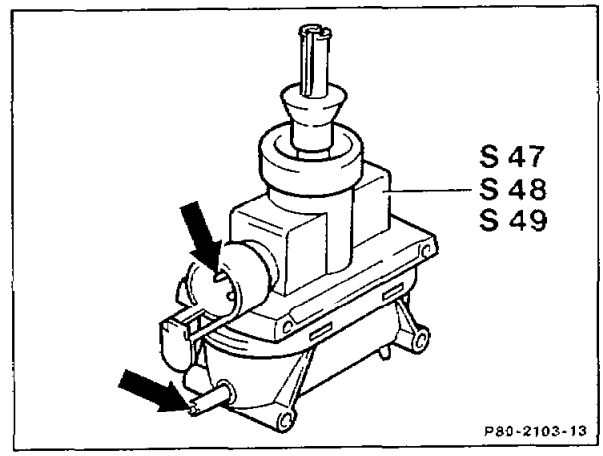

1st version up to approx. 08/90

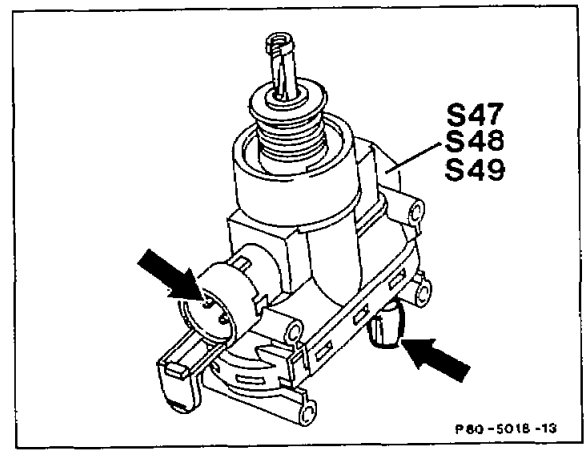

2nd version as of approx. 09/90

The actuators of the front doors and tailgate differ externally from the trunk lid actuator in having different colour coding (refer to table on p. 11). When performing repairs, the actuator must not be confused as a harder cup seal is used on the trunk lid actuator for locating the top and bottom end stop.

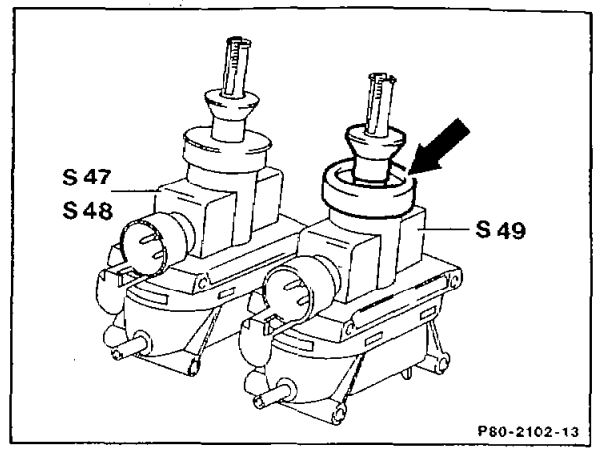

S47 Front left door actuator
S48 Front right door actuator
S49 Trunk lid actuator (tailgate)

Trunk lid lock actuator S49 (coupé and cabriolet)

The electrical pneumatic operation corresponds to the actuator used in the Sedan. The cup seal on the actuating rod is eliminated.

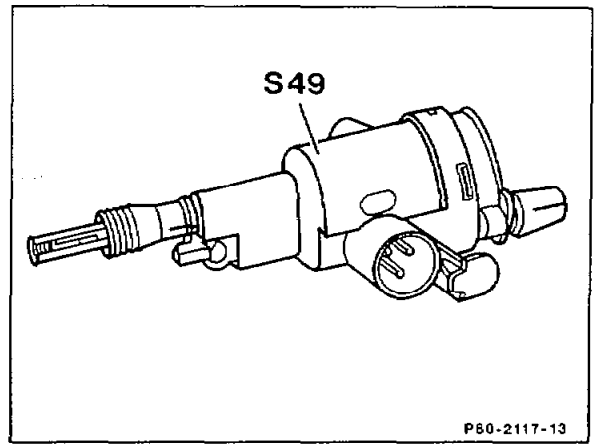

The actuator is clipped to the cover (a) (screwed on for Sedan).

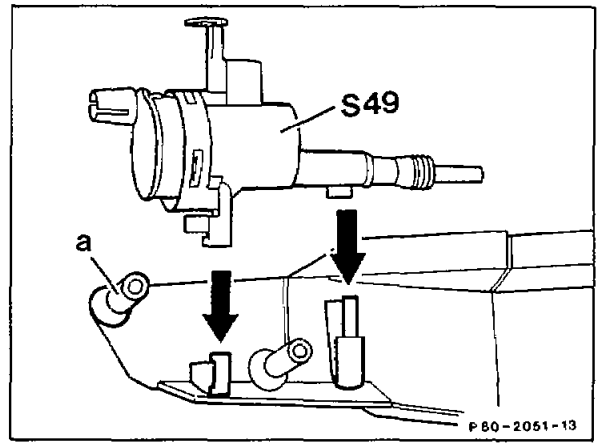

Note

As of 03/94 the actuators are no longer connected electrically on vehicles for (D) and vehicles with code 885 and therefore operate as purely pneumatic elements.

Distinguishing features of actuator (S47, S48, S49)

	Colour			Installation point		
Manufacturer	Housing	Sliding sleeve	Cup seal	Driver's door Tailgate	Trunk lid Sedan	Trunk lid Coupé, Cabriolet
Bosch	black	black	black	•		
	black	yellow	black		•	
Hella	black	black	black	•		
	black	black	red		•	
	white	black	black	•		
	white	black	red		•	
Woco	black	black	black	•		
	black	black	white or red		•	
Woco [1]	black	black	black		•	•
Alfmeier	black	black	–			•

[1] Red shift rod mounting, for vehicles with trunk lid auxiliary locking device only

The electrical and pneumatic operation of all the actuator is identical. Positive and ground are supplied constantly to the electrical switch in the top part of the actuator. The two-way switch passes a positive control voltage for unlocking and a negative control for locking to the supply pump.

The bottom chamber of the element is pressurized for unlocking and a vacuum created for locking.

The electrical and pneumatic parts of the actuator can be separated by a sliding sleeve with detent to enable the lock to also be operated when the actuator is still pressurized or when a vacuum exists.

Sliding sleeve lock (phased in from approx. 12/86)

An integrated support (arrow) prevents the position of the sliding sleeve (a) from being altered. When the connecting rod to the lock is inserted, this overrides the support.
As a result, the element is in the installation position. Positioning faults at the door actuator are then no longer possible.

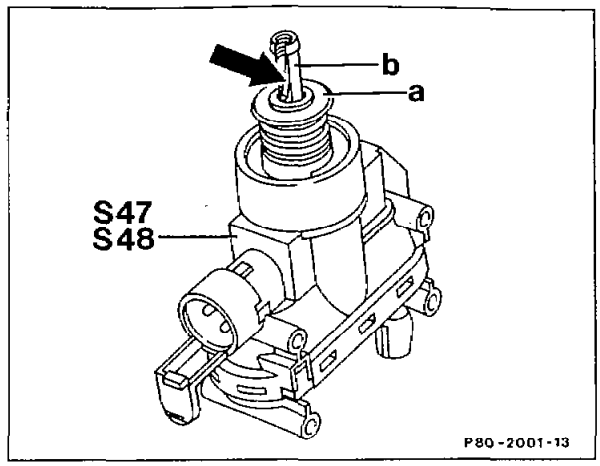

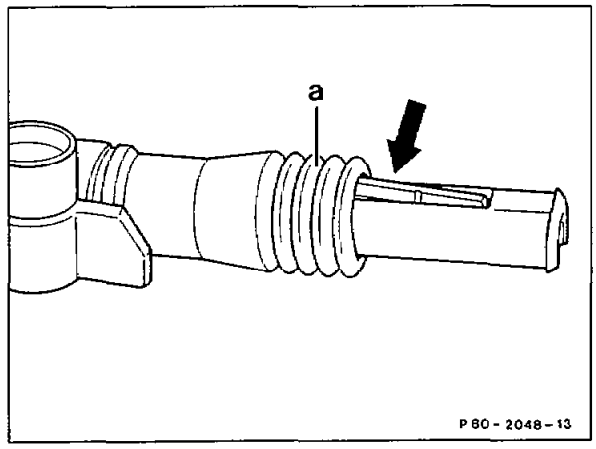

Rear door actuator

The rear door actuator is fitted with a pneumatic connection. The bottom chamber of the actuator is pressurized for unlocking and a vacuum created for locking. The pneumatic line is fixed in place by a clip (arrow) on the underside of the housing.

1st version up to approx. 08/90

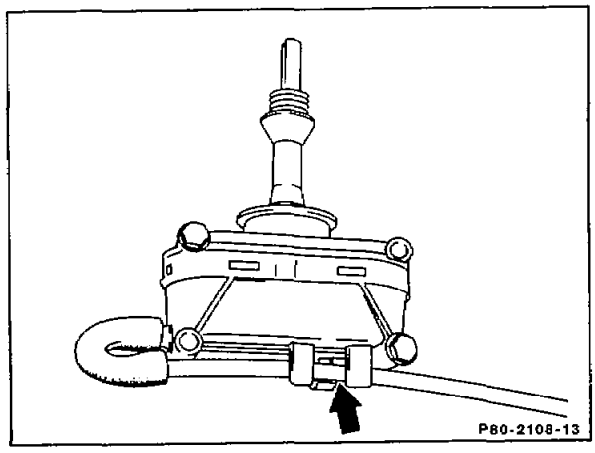

2nd version as of approx. 09/90

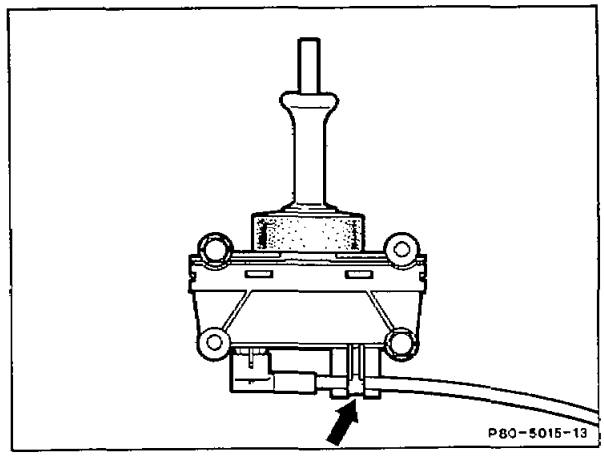

Fuel filler flap actuator

1st version up to approx. 03/85

The designed operation of this actuator corresponds to the rear door actuator, although it fitted with a harder cup seal for positioning the top and bottom end stop.The sliding sleeve can be distinguished by its yellow colour.

2nd version from approx. 04/85 to approx. 03/87 (Sedan only)

Actuator as 1st version but with anti-theft lock (a) and linkage guide (arrow). The anti-theft lock prevents the actuator being unlocked manually via the full filler flap.

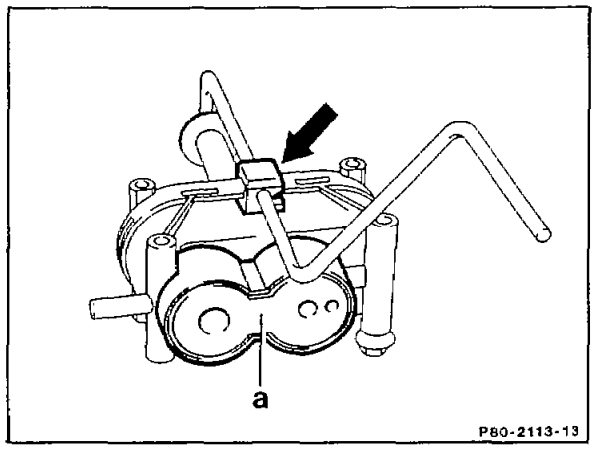

3rd version

Model 124 Sedan from approx. 04/87, A 490369

Model 124 Station Wagon and Coupé from start of production.

Clip-fit element with direct locking linkage, anti-theft lock and manual release button.

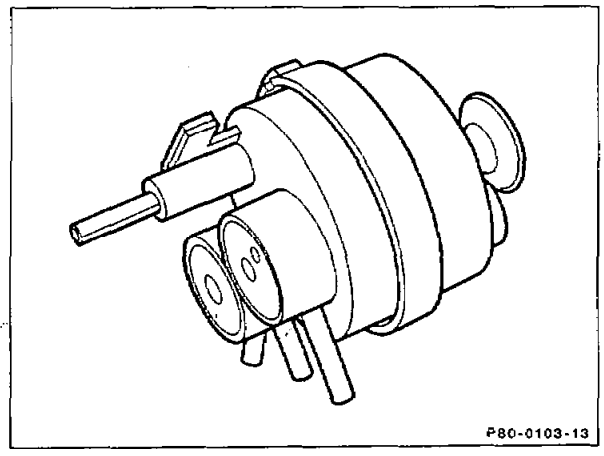

4th version as of approx. 09/90
Clip-fit pneumatic actuator with direct locking linkage, anti-theft device and emergency unlocking button.
A valve in the actuator prevents the locking linkage from being pushed back manually via the fuel filler flap. The guide bush (6) covers the locking linkage and prevents water coming into contact with the linkage which can result in the actuator icing up in winter.

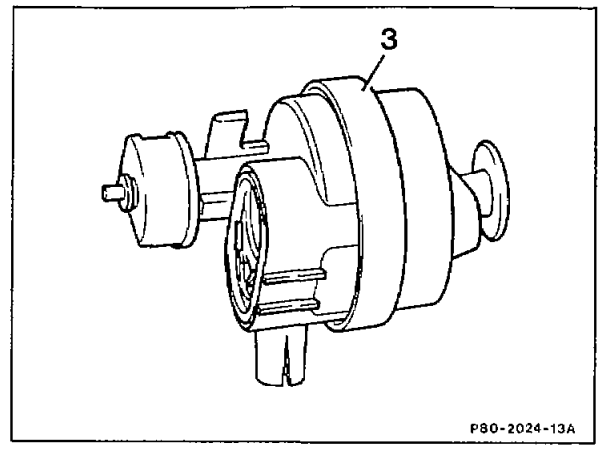

Warning buzzer contact, exterior lamps/central locking system (S8/2), (except vehicles for (D) as of 03/94 and vehicles with code 885)
This switch on the steering lock interrupts the ground cable to the actuator in the right front door (left door on RHD) if the ignition key is in position 1 or 2 in the steering lock. In addition the ground supply to the trunk lid actuator is also interrupted on Model 124 Sedan from approx. 05/85 to approx. 04/86 and on Model 124 Station Wagon from start of production.

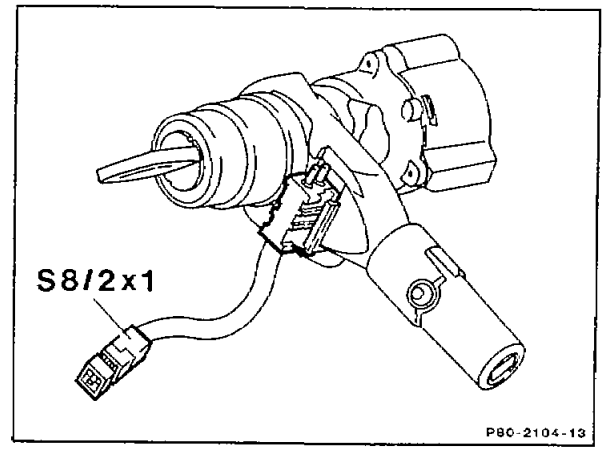

Wiring harness with replaceable connectors (coupé and cabriolet)

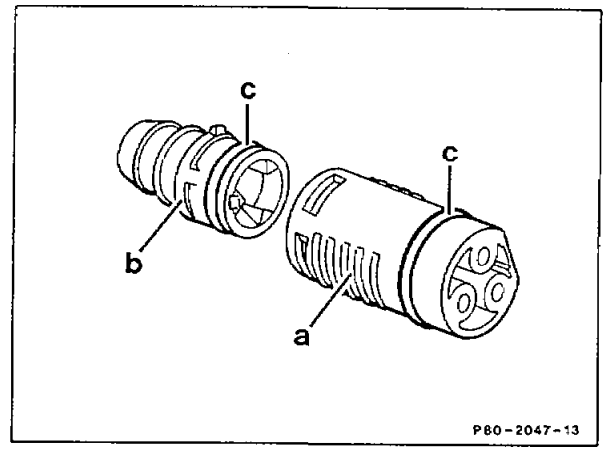

a Front part of connector
b Rear part of connector
c O-ring

Interior central locking system switch (S85) ((D) only as of 03/94 and vehicles with code 885)

Vehicles unlocked with the infrared remote control can be locked and unlocked centrally with a switch in the center console.

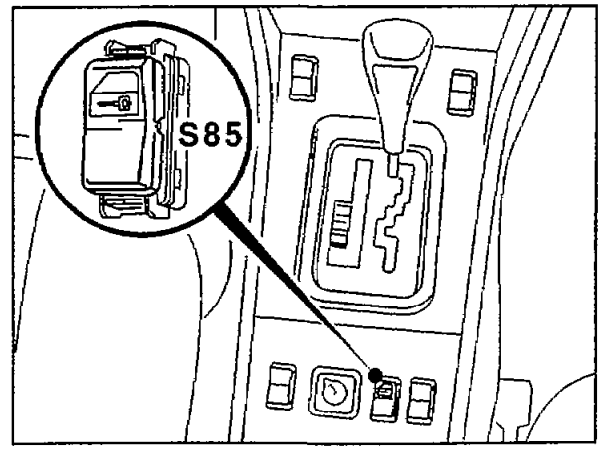

P80-5233-13

Pneumatic lines with quick-fit connections
In September 1988 pneumatic lines were, and will be as of approx. 09/90, fitted with quick-fit connections which run directly from a 6-point distributor at the supply pump to the pneumatic actuators. The distributors in the front left and front right footwell are therefore not fitted.

Cars affected

Model	Vehicle Ident End No. from	to
124	1A 861403 1F 097724 and across the range as of approx. 09/90	1A 866954 1F 098305

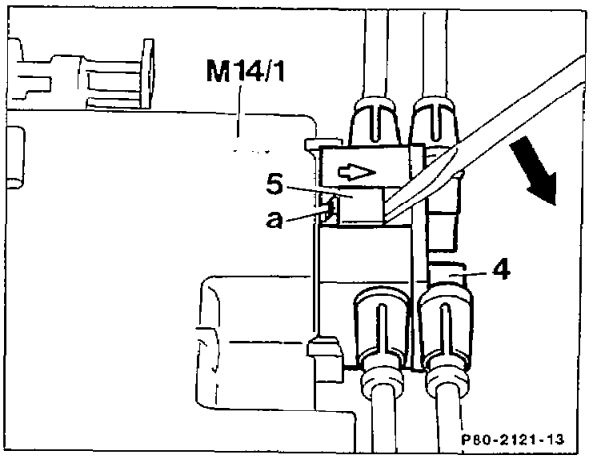

4 6-point distributor
5 Locking device
M14/1 Central system locking supply pump
a Pull-off lock

All pneumatic lines are fitted with a plug at their end which engages in the pneumatic connecting bush of the actuator.

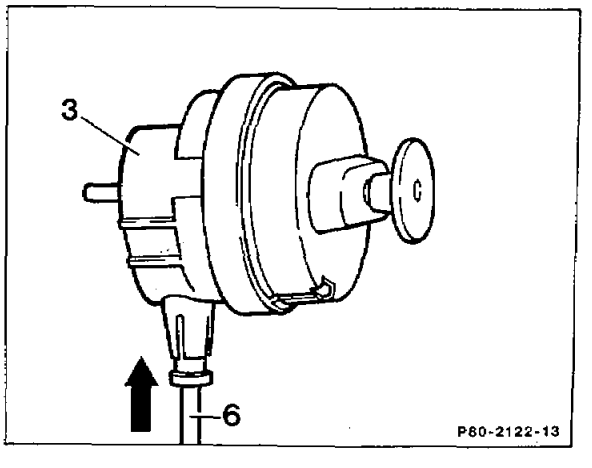

3 Fuel filler flap actuator
6 Pneumatic line

The ends of the pneumatic lines are marked. The markings indicate to which pneumatic actuator the line belongs.

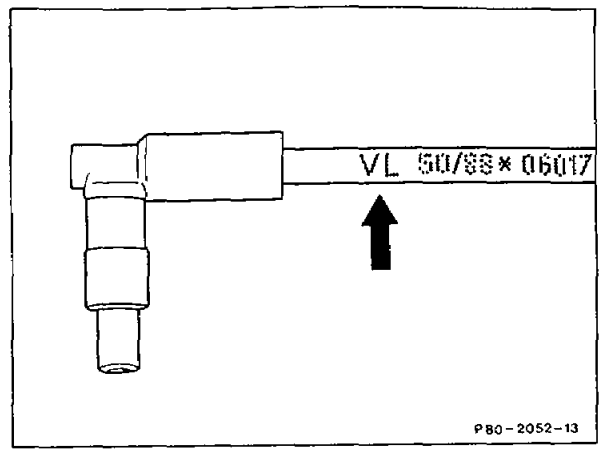

Marking	Actuator
VL	Left front door actuator
VR	Right front door actuator
HL	Left rear door actuator
HR	Right rear door actuator
HD	Trunk lid lock actuator
KE	Fuel filler flap actuator

A. General

1st version up to approx. 08/90

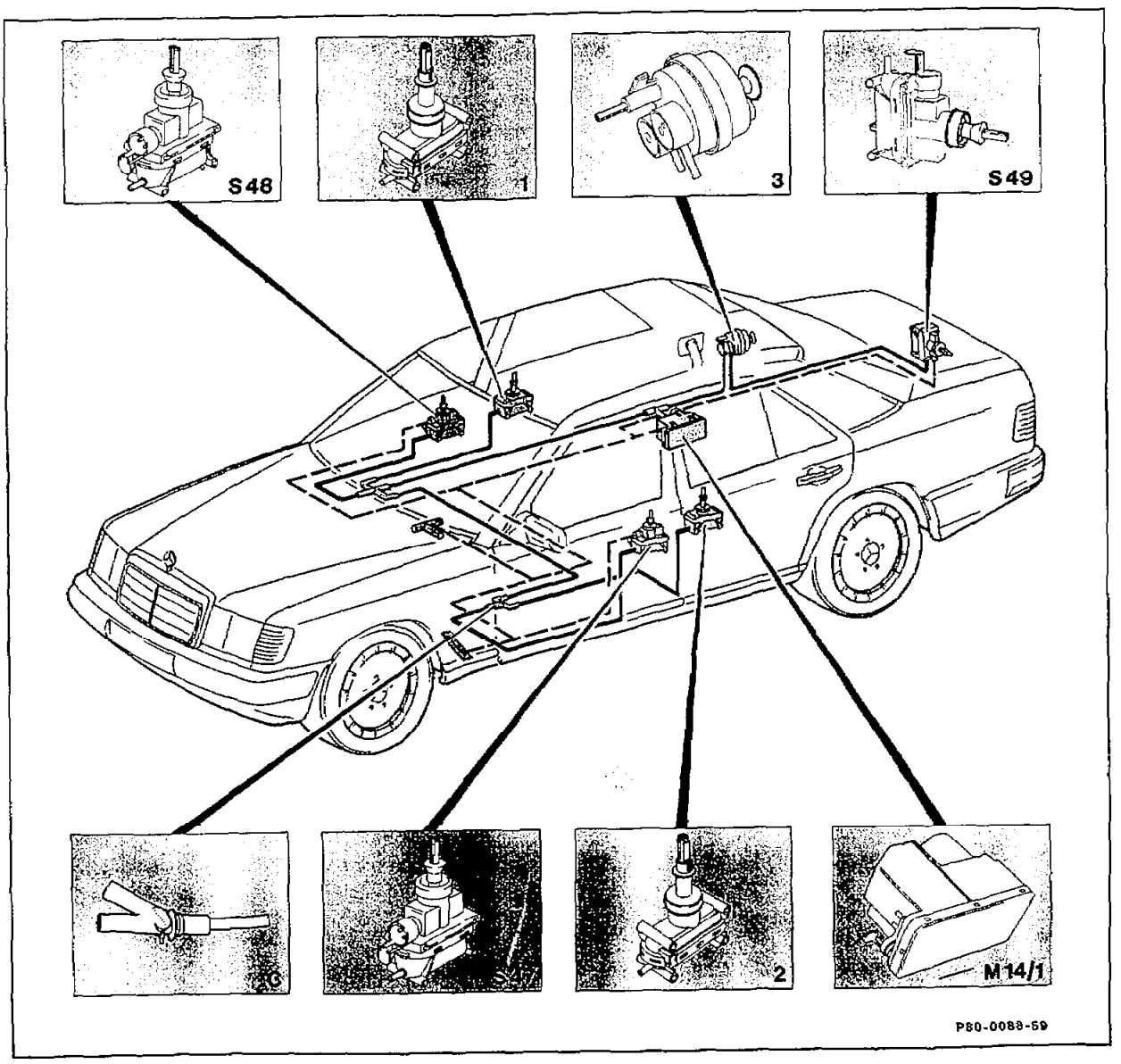

1	Right rear door actuator	M14/1	Central locking system supply pump
2	Left rear door actuator	S47	Front left door actuator
3	Fuel filler flap actuator	S48	Front right door actuator
C	Distributor	S49	Trunk lid actuator
- - - -	Electric lead	——	Pneumatic line

2nd version as of approx. 09/90

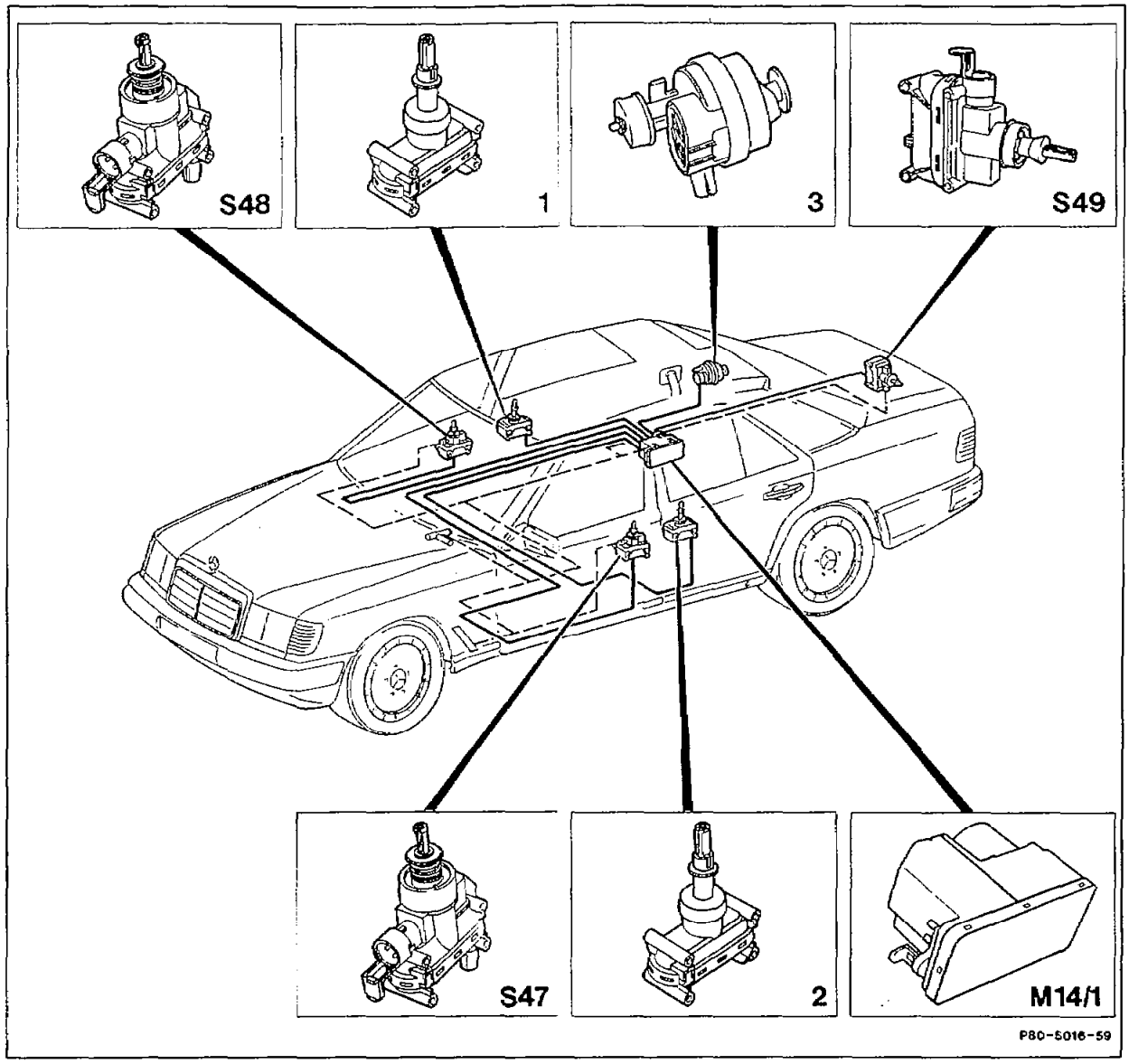

1	Right rear door actuator	M14/1	Supply pump, central locking system (ZV)
2	Left rear door actuator	S47	Left front door actuator
3	Fuel filler flap actuator	S48	Right front door actuator
- - - -	Electric lead	S49	Trunk lid lock actuator
		——	Pneumatic line

3. Version for (D) only as of 03/94 and vehicles with code 885

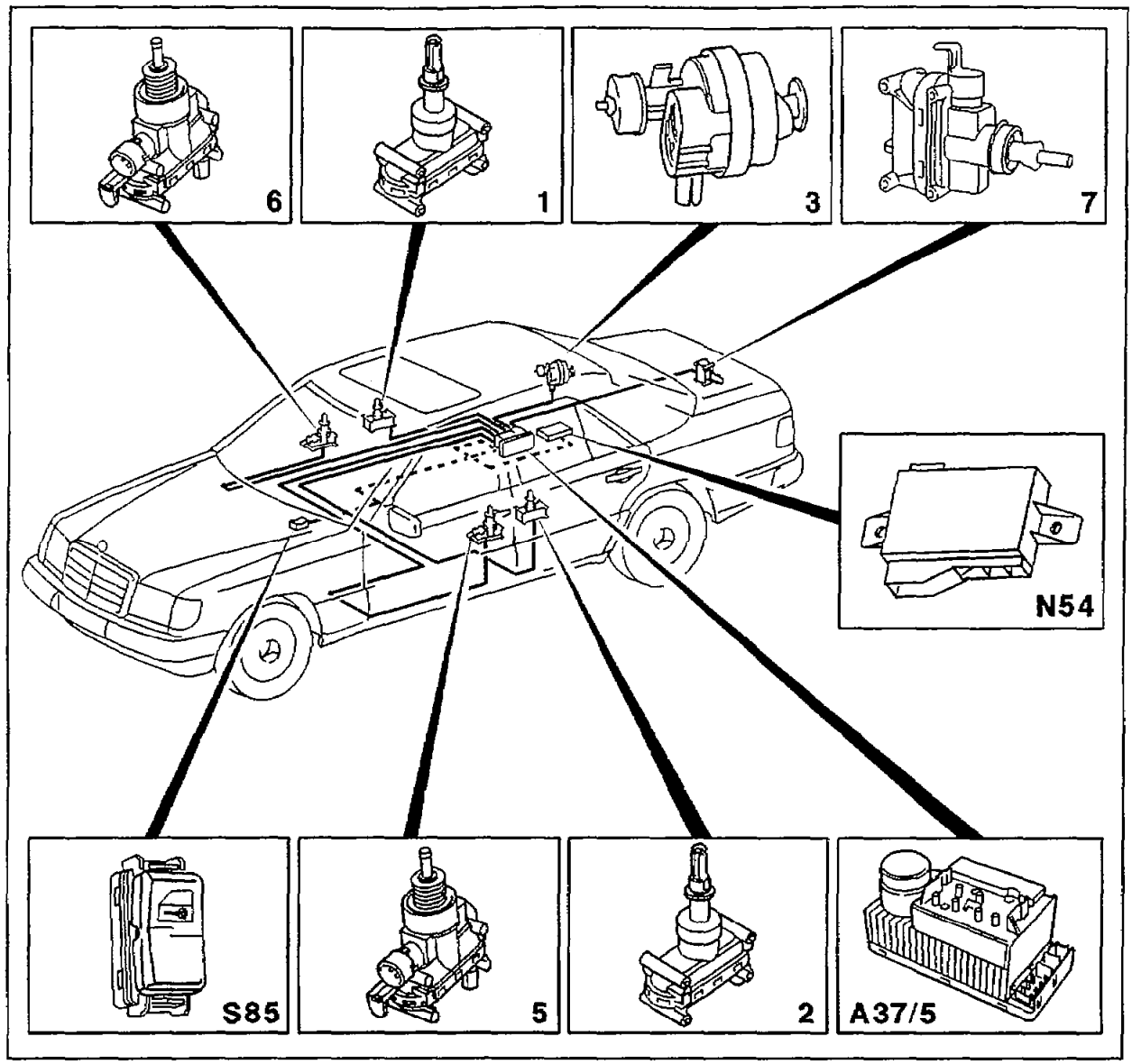

P80-5232-59

1	Right rear door actuator	A37/5	Pneumatic control unit
2	Left rear door actuator	N54	Infrared remote control unit for central locking system
3	Tank flap actuator	S85	Interior central locking system switch
5	Left front door actuator	——	Pneumatic line
6	Right front door actuator	- - - -	Electric lead
7	Trunk lid actuator		

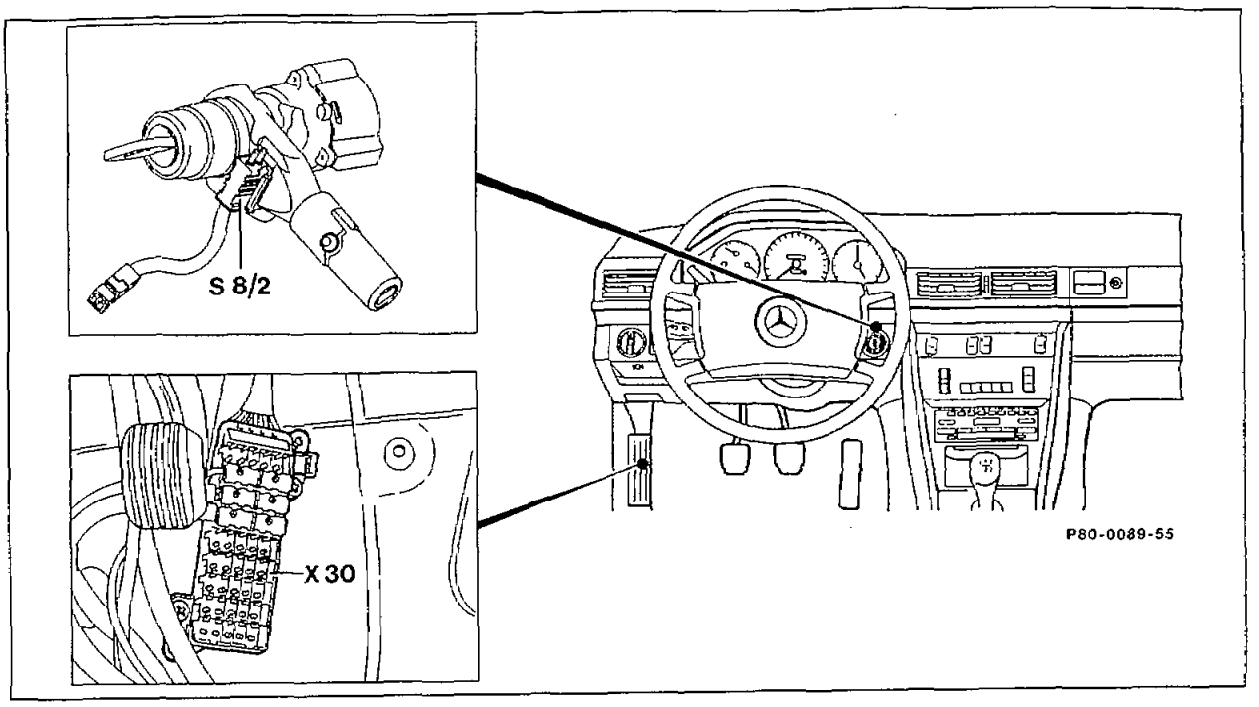

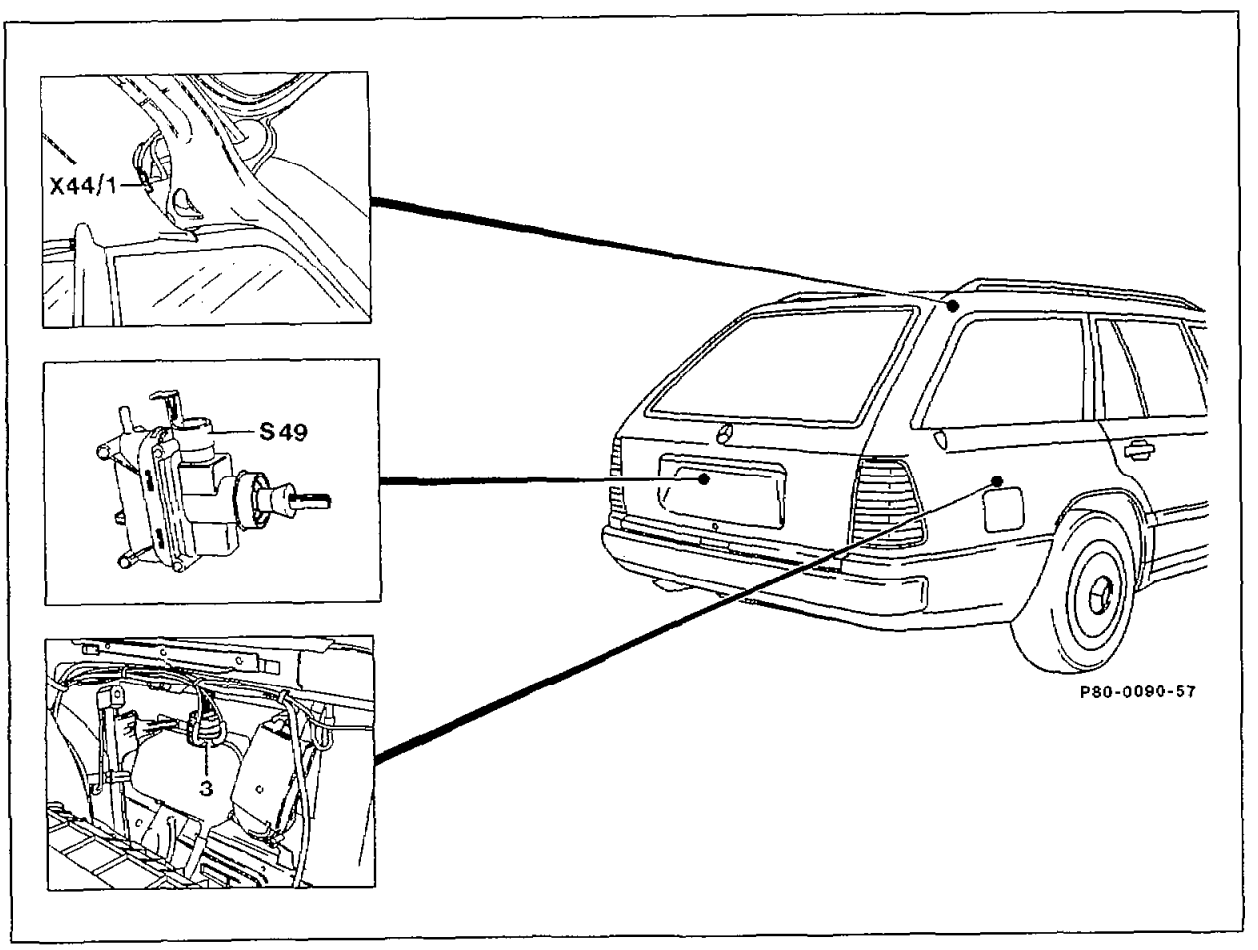

3	Fuel filler flap actuator	X30	Connector plug for optional electrical equipment
S8/2	Lighting/central locking system warning buzzer contact	X44/1	Connector, central locking system/trunk lock
S49	Tailgate actuator		

The central locking system with multipoint operation is based on the central locking system with single door operation. The car can be locked or be unlocked centrally from the driver's and front passenger's door and from the trunk lid or tailgate by operating the key or the locking pin. The central locking system includes all the doors, the trunk lid or tailgate and the fuel filler flap.

B. Operation

1. Version except (D) as of 03/94 and vehicles with code 885

Driver's door
The central locking system can be operated at any time when the driver's door is closed. From the outside with the key (turn to the right as far as stop to lock, turn to the left as far as a stop to unlock), from the inside by pressing down the locking pin or pulling the handle in the door trim.

Front passenger's door
The central locking system can be operated from the closed or opened front-passenger's door with the key or with the locking pin or handle (as the driver's door). The car can only be locked centrally, if the ignition key has been withdrawn or, after being withdrawn, has been re-inserted but not operated (key in position 0 in steering lock). This prevents the user inadvertently being locked out by operating the system from the front passenger's door with the key in position 1 and 2 or from the tailgate of Station Wagon.

Trunk lid (Sedan only)
The central locking system can be operated with the key when the trunk lid is opened or closed.

To unlock:
Turn key to the left as far as a stop and withdraw in vertical position.

To lock:
Turn key to right as far as the stop and withdraw in vertical position.

Additional lock:
Turn key to right as far as a stop and withdraw in horizontal position. The trunk lid now remains locked even when the doors are unlocked centrally.

Tailgate (Station Wagon only)
To unlock:
Turn key to the left as far as a stop and withdraw in vertical position.

To lock:
Turn key to the right as far as a stop and withdraw in vertical position. Car is locked and tailgate is additionally secured. When the central locking system is unlocked from one of the front doors, the tailgate remains locked. The additional interlock of the tailgate can only be cancelled at the tailgate by turning the key to the left as far as a stop or by opening the tailgate with the handle. On cars in (AUS) and (USA) version the locking pin must be withdrawn in place of opening with the handle.

The locking pin in the tailgate indicates whether the car is locked or unlocked.

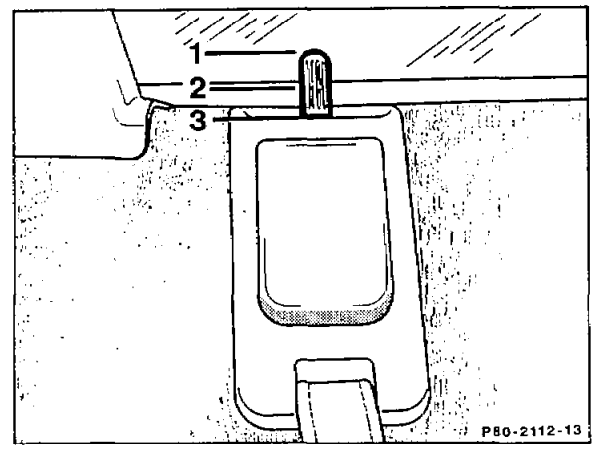

Position 1 = Car unlocked
Position 2 = Car locked from front door
Position 3 = Car locked from tailgate
(tailgate is additionally secured)

Note
If the trunk lid or tailgate of a centrally locked car is unlocked, all the doors and the fuel filler flap are also unlocked. After closing the trunk lid or tailgate, the car must again be locked centrally.

Manual release of fuel filler flap
If the central locking system fails, the fuel filler flap can be unlocked manually by operating a red manual release button on the fuel filler flap actuator.

2. Version for (D) only as of 03/94 and vehicles with code 885

The central locking system, anti-theft warning system and convenience feature can now only be controlled with the infrared remote control for the central locking system (IFZ).

C. Function

1. Version except (D) as of 03/94 and vehicles with code 885

Sequence of functions as illustrated by unlocking car at driver's door

When the key is turned to the left in the lock cylinder, the electric switch in the actuator is switched over by means of a linkage. This switch then passes a positive voltage along its control lead to the supply pump.
The supply pump operates and generates an overpressure which passes along a system of lines to all the pneumatic actuators.
The diaphragms in the actuators are pushed up, operate the locks via a linkage and unlock them.
The fuel filler flap actuator unlocks the flap directly. At the same time, the electric switches of the actuator in the front passenger's door and in the trunk lid are also switched over by the pneumatic element of the actuator and like the mechanically operated switch in the driver's door actuator, also supply a positive voltage to the supply pump.

Once a pressure of approx. 450 mbar has been reached in the system, a pressure switch switches off the supply pump.
Air is again released from the pneumatic line system and from the actuator through the supply pump – the system is pressureless and the unlocking operation is completed.

The locking operation proceeds in a similar manner to the unlocking operation. However, the supply pump is actuated by a negative control voltage, the direction of rotation of the pump motor is reversed, thus producing the vacuum required for locking.

Function diagram

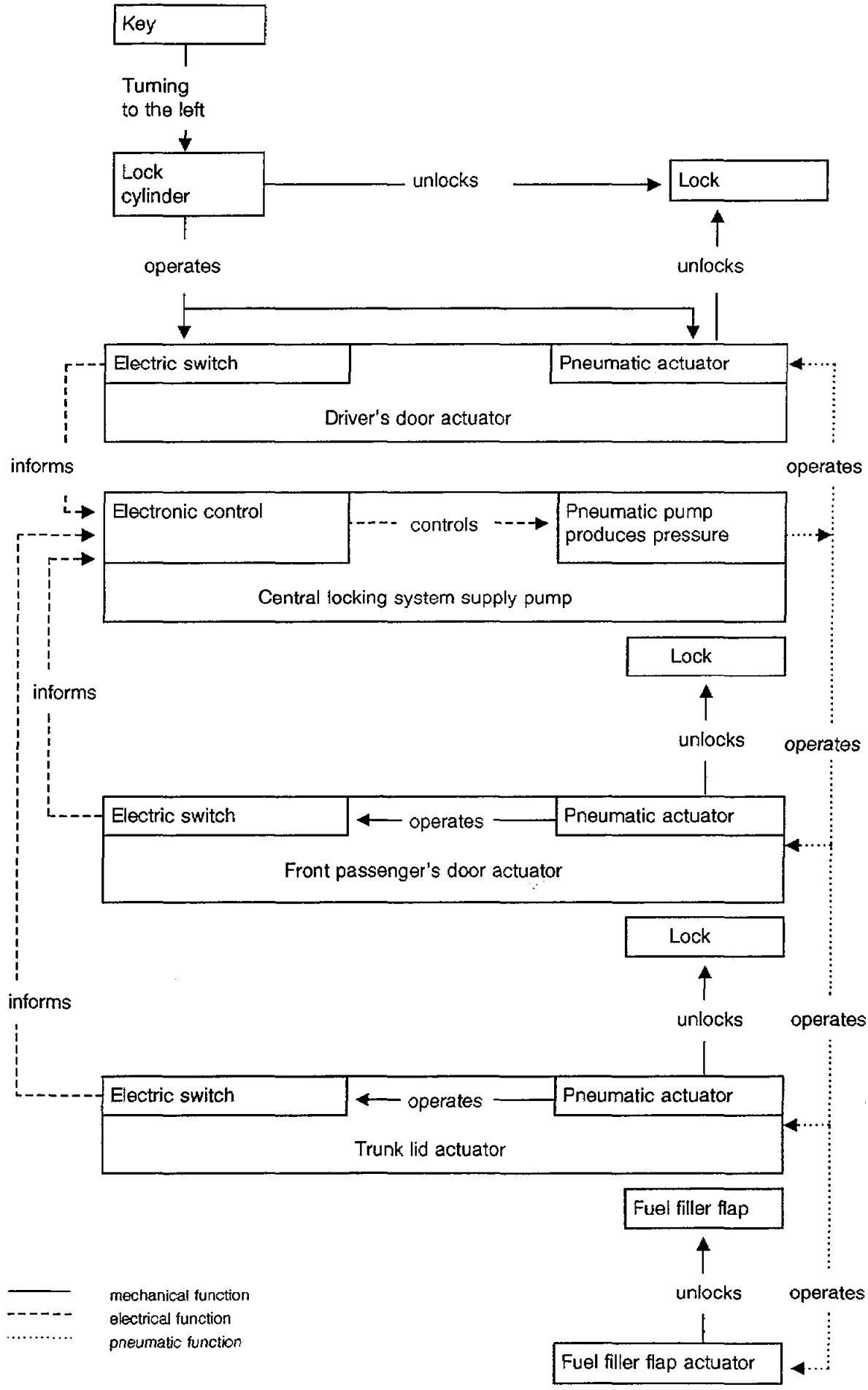

2. Version for (D) only as of 03/94 and vehicles with code 885

As of 03/94 the infrared remote control for the central locking system (IFZ) is a standard feature. The central locking system pump as well as the control unit for the infrared remote control are the same as for model series 202 in terms of the design and function. Since the central locking system actuators are no longer connected electrically, the central locking system, anti-theft warning system and convenience feature can no longer be actuated with the mechanical key. On vehicles with anti-theft warning system an alarm is tripped on vehicles locked with the infrared remote control when they are unlocked with the mechanical key. Moreover, the standard immobilizer can only be activated and deactivated with the infrared remote control for the central locking system.

D. Components

Supply pump (M14/1)
1st version, Sedan up to approx. 04/86, Station Wagon up to approx. 09/88.
The supply pump for multipoint operation has two electrical connections. In view of the modified electronic switching function, this supply pump cannot be interchanged with the supply pump used hitherto (single-door operation).

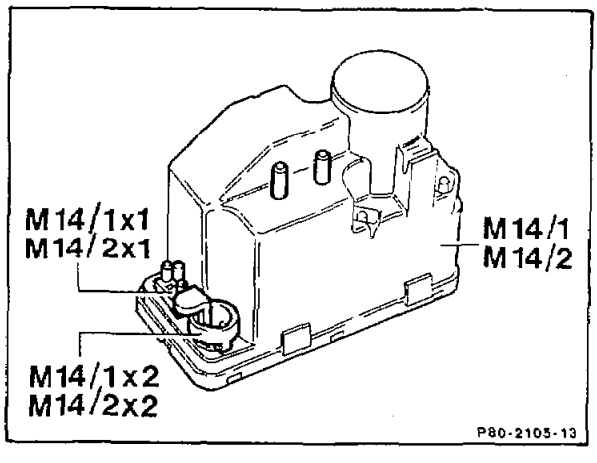

The supply pump is connected to positive (terminal 30) and the ground (terminal 31) through the 2-pin connection (M14/1x1, 3-pin on cars with orthopedic driver's backrest M14/2x1).

The actuators pass a negative control voltage during locking and a positive control voltage during unlocking through the connector (M14/1x2) to the supply pump.
The supply pump produces pressure for unlocking and vacuum for locking (approx. 500 mbar). If there is a severe leakage, the supply pump switches off after 25 – 150 s (safety switching time). The electronic control features several logic functions which avoid incorrect switching operations and faults.

2nd version from approx. 05/86 to approx. 09/88 (not for Station Wagon).
The control of the supply pump is equipped with a "full customer IC". This IC features not only the same functions as hitherto but also a fault current detection which prevents creep currents resulting in the system operating unintentionally. Instead, the control inputs affected are deactivated. The supply pump is recognizable from the light-coloured cover (arrow), hitherto black.

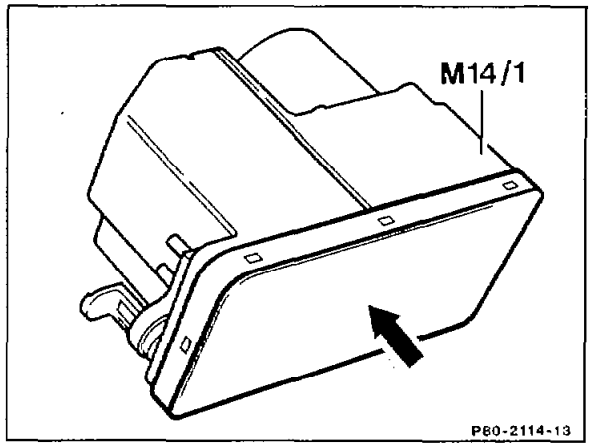

At the same time, the electrical wiring harness has been modified. The ground cable of the actuator for the trunk lid lock (S49) is now connected directly to the main ground point *(refer to wiring diagrams 80-800)*; hitherto to the lighting/central locking system warning buzzer contact (S8/2).
Production breakpoint as from
Vehicle Ident End No.:
A 245572.
The modified supply pump may not be fitted to cars with a lower Vehicle Ident End No. The previous version remains valid for such cars.

3rd version as from 10/88
To enhance the comfort features, the supply pump of the central locking system is replaced by an enhanced-performance version. It can be interchanged with the previous version. The distinguishing feature of pump with black cover for Model 124 Station Wagon and pump with light- coloured cover for all other models remains unchanged.
Production breakpoint as from
Vehicle Ident End No.:
A 875395
F 092086

4th version with infrared remote control as of approx. 09/92.
This supply pump has an additional electrical plug connection (M14/1x3, M14/2x3) for the control by the infrared remote control unit.

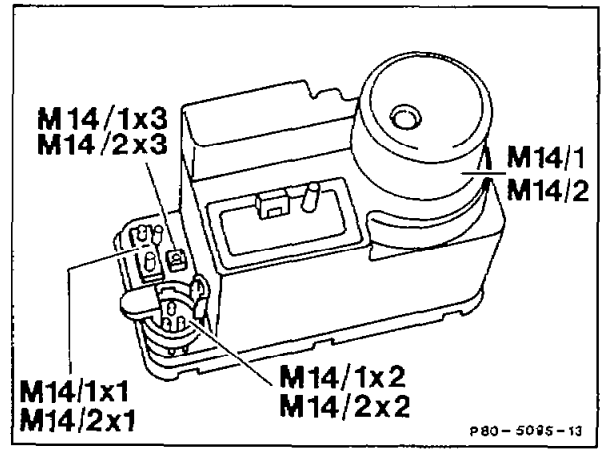

5. Version for (D) only as of 03/94 and vehicles with code 885

With introduction of the immobilizer the pneumatic control unit (PSE) is installed in combination with the control unit for the infrared remote control used on model series 202. See diagnosis manual for diagnosis on pneumatic control unit (PSE) and infrared remote control.

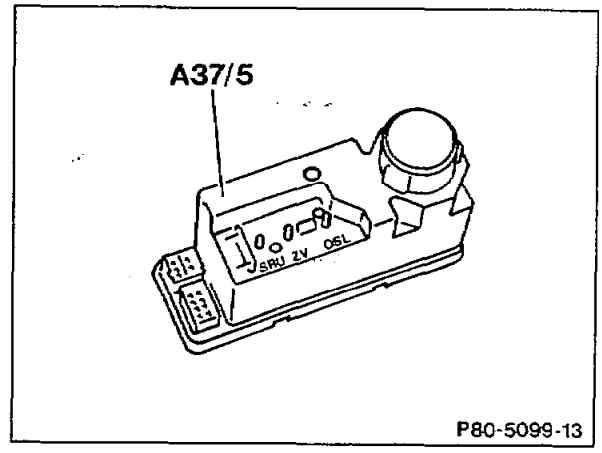

Technical data of supply pump

		from approx. 10.88	up to approx. 09/88
Pressure cutoff point	(mbar)	approx. 650	approx. 500
Switching time	(s)	approx. 1	approx. 3
Safety switching time	(s)	25 – 30	25 – 150
Power consumption	(A)	max. 7.5	max. 3.5
Air admission/release time	(s)	approx. 10	approx. 10

Actuator (S47, S48, S49)

A combined actuator is fitted to both front doors and the trunk lid or tailgate. This actuator has an electrical and a pneumatic connection (arrows)..

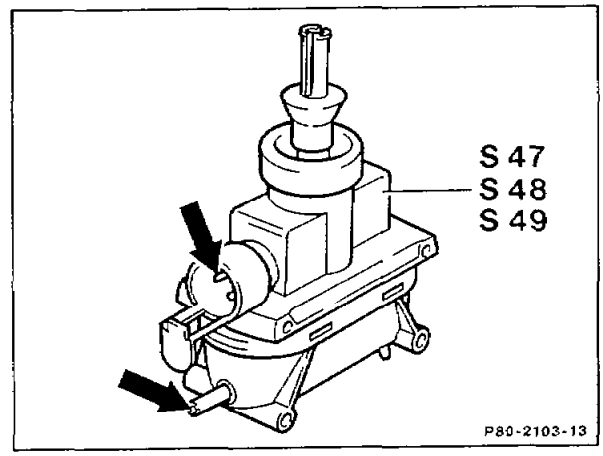

1st version up to approx. 08/90

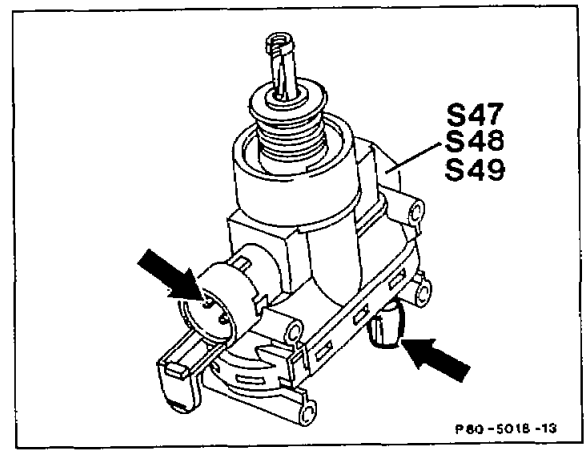

2nd version as of approx. 09/90

The actuators of the front doors and tailgate differ externally from the trunk lid actuator in having different colour coding (refer to table on p. 11). When performing repairs, the actuator must not be confused as a harder cup seal is used on the trunk lid actuator for locating the top and bottom end stop.

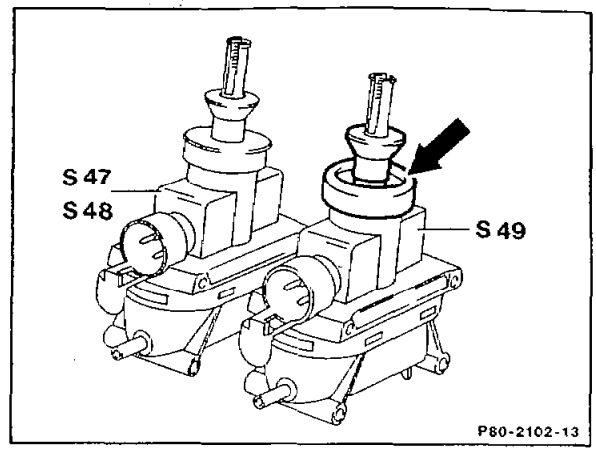

S47 Front left door actuator
S48 Front right door actuator
S49 Trunk lid actuator (tailgate)

Trunk lid lock actuator S49 (coupé and cabriolet)

The electrical pneumatic operation corresponds to the actuator used in the Sedan. The cup seal on the actuating rod is eliminated.

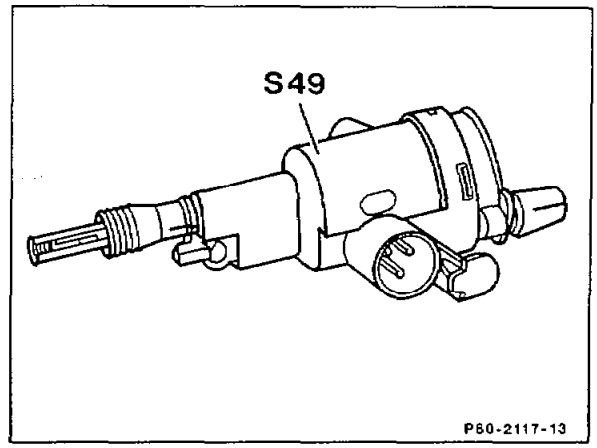

The actuator is clipped to the cover (a) (screwed on for Sedan).

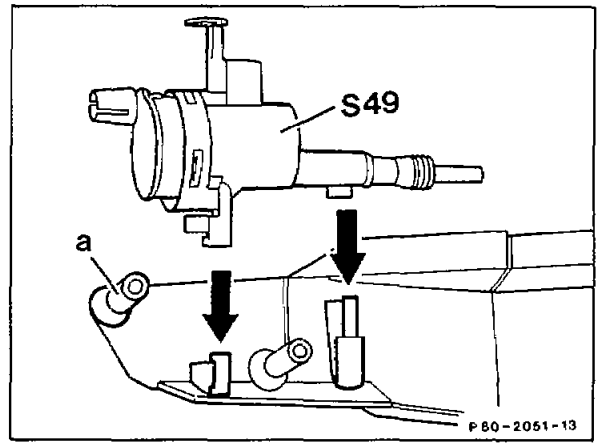

Note

As of 03/94 the actuators are no longer connected electrically on vehicles for (D) and vehicles with code 885 and therefore operate as purely pneumatic elements.

Distinguishing features of actuator (S47, S48, S49)

	Colour			Installation point		
Manufacturer	Housing	Sliding sleeve	Cup seal	Driver's door Tailgate	Trunk lid Sedan	Trunk lid Coupé, Cabriolet
Bosch	black	black	black	•		
	black	yellow	black		•	
Hella	black	black	black	•		
	black	black	red		•	
	white	black	black	•		
	white	black	red		•	
Woco	black	black	black	•		
	black	black	white or red		•	
Woco [1]	black	black	black		•	•
Alfmeier	black	black	–			•

[1] Red shift rod mounting, for vehicles with trunk lid auxiliary locking device only

The electrical and pneumatic operation of all the actuator is identical. Positive and ground are supplied constantly to the electrical switch in the top part of the actuator. The two-way switch passes a positive control voltage for unlocking and a negative control for locking to the supply pump.

The bottom chamber of the element is pressurized for unlocking and a vacuum created for locking.

The electrical and pneumatic parts of the actuator can be separated by a sliding sleeve with detent to enable the lock to also be operated when the actuator is still pressurized or when a vacuum exists.

Sliding sleeve lock (phased in from approx. 12/86)

An integrated support (arrow) prevents the position of the sliding sleeve (a) from being altered. When the connecting rod to the lock is inserted, this overrides the support.
As a result, the element is in the installation position. Positioning faults at the door actuator are then no longer possible.

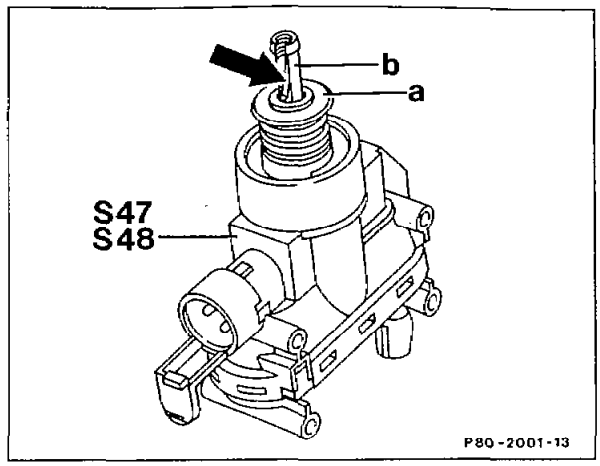

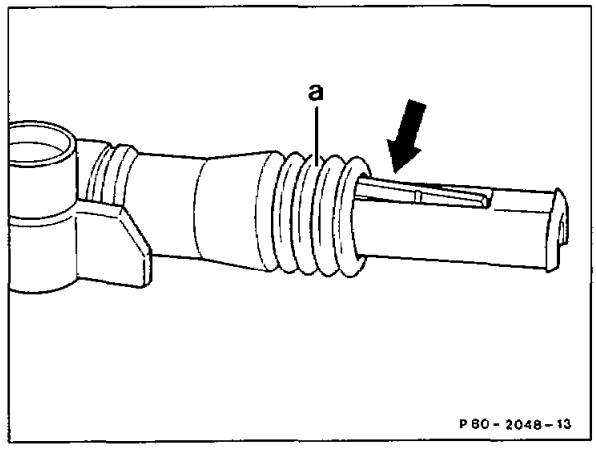

Rear door actuator

The rear door actuator is fitted with a pneumatic connection. The bottom chamber of the actuator is pressurized for unlocking and a vacuum created for locking. The pneumatic line is fixed in place by a clip (arrow) on the underside of the housing.

1st version up to approx. 08/90

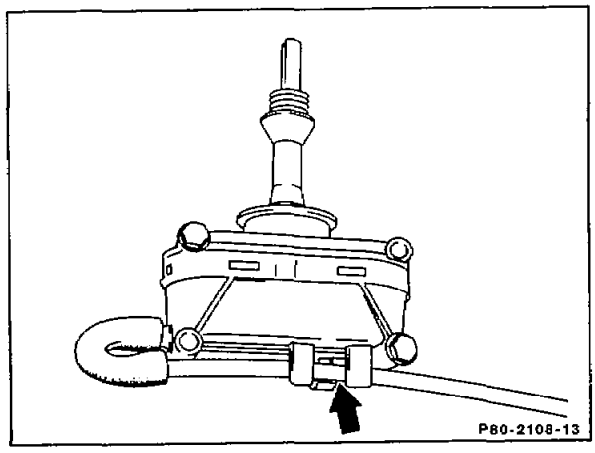

2nd version as of approx. 09/90

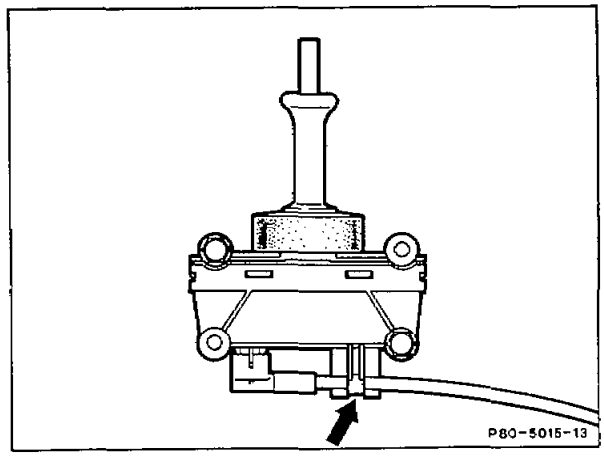

Fuel filler flap actuator

1st version up to approx. 03/85

The designed operation of this actuator corresponds to the rear door actuator, although it fitted with a harder cup seal for positioning the top and bottom end stop.The sliding sleeve can be distinguished by its yellow colour.

2nd version from approx. 04/85 to approx. 03/87 (Sedan only)

Actuator as 1st version but with anti-theft lock (a) and linkage guide (arrow). The anti-theft lock prevents the actuator being unlocked manually via the full filler flap.

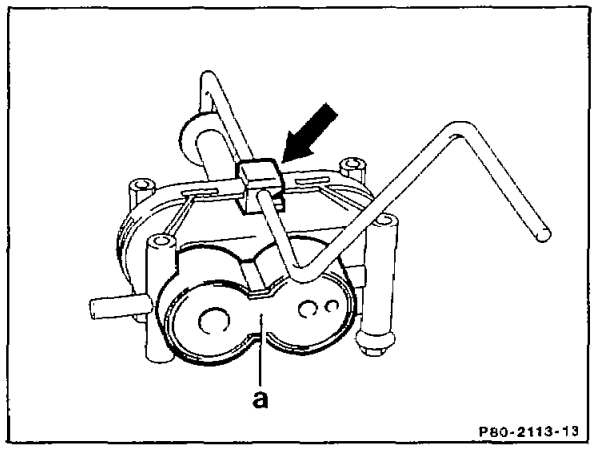

3rd version

Model 124 Sedan from approx. 04/87, A 490369

Model 124 Station Wagon and Coupé from start of production.

Clip-fit element with direct locking linkage, anti-theft lock and manual release button.

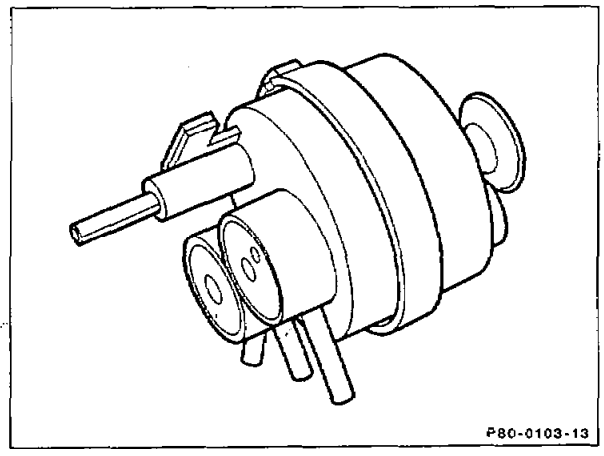

4th version as of approx. 09/90
Clip-fit pneumatic actuator with direct locking linkage, anti-theft device and emergency unlocking button.
A valve in the actuator prevents the locking linkage from being pushed back manually via the fuel filler flap. The guide bush (6) covers the locking linkage and prevents water coming into contact with the linkage which can result in the actuator icing up in winter.

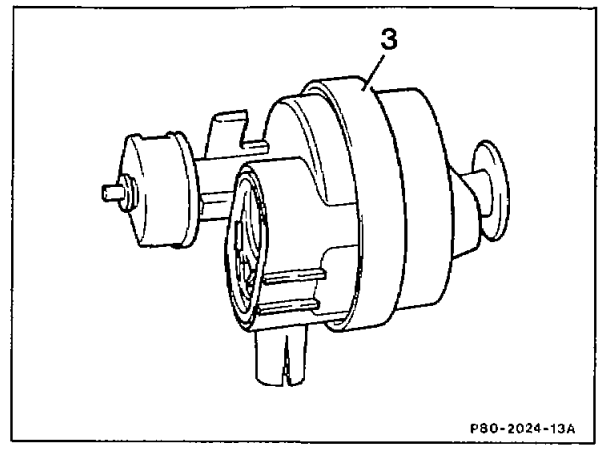

Warning buzzer contact, exterior lamps/central locking system (S8/2), (except vehicles for (D) as of 03/94 and vehicles with code 885)
This switch on the steering lock interrupts the ground cable to the actuator in the right front door (left door on RHD) if the ignition key is in position 1 or 2 in the steering lock. In addition the ground supply to the trunk lid actuator is also interrupted on Model 124 Sedan from approx. 05/85 to approx. 04/86 and on Model 124 Station Wagon from start of production.

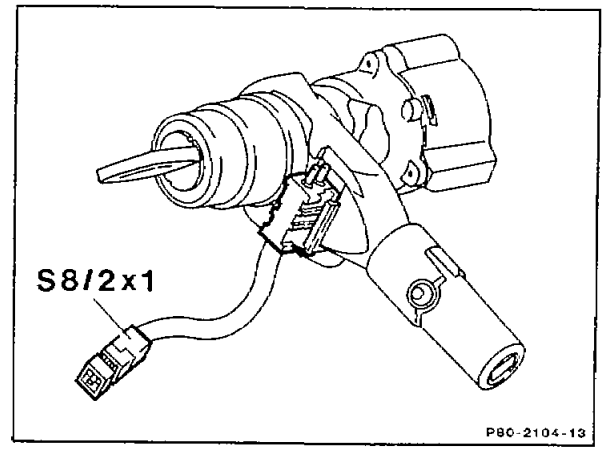

Wiring harness with replaceable connectors (coupé and cabriolet)

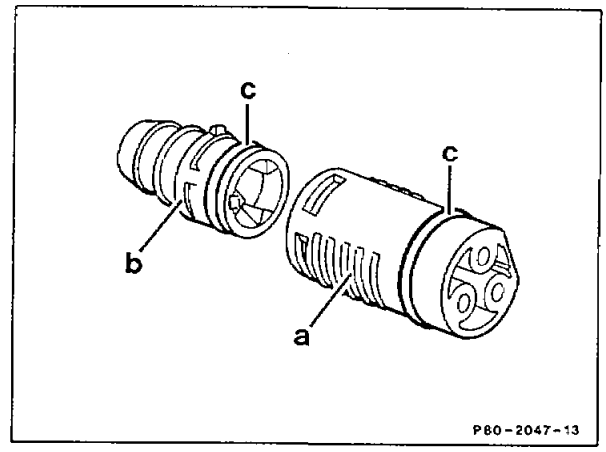

a Front part of connector
b Rear part of connector
c O-ring

Interior central locking system switch (S85) ((D) only as of 03/94 and vehicles with code 885)

Vehicles unlocked with the infrared remote control can be locked and unlocked centrally with a switch in the center console.

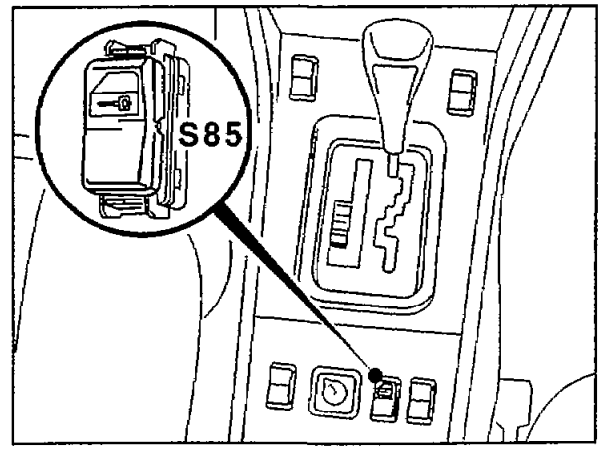

P80-5233-13

Pneumatic lines with quick-fit connections
In September 1988 pneumatic lines were, and will be as of approx. 09/90, fitted with quick-fit connections which run directly from a 6-point distributor at the supply pump to the pneumatic actuators. The distributors in the front left and front right footwell are therefore not fitted.

Cars affected

Model	Vehicle Ident End No. from	to
124	1A 861403 1F 097724 and across the range as of approx. 09/90	1A 866954 1F 098305

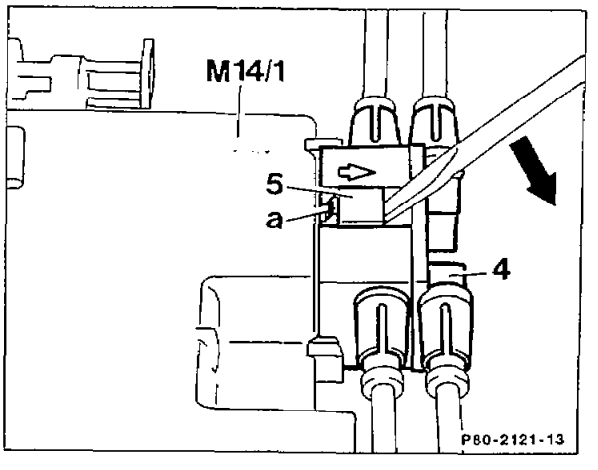

4 6-point distributor
5 Locking device
M14/1 Central system locking supply pump
a Pull-off lock

All pneumatic lines are fitted with a plug at their end which engages in the pneumatic connecting bush of the actuator.

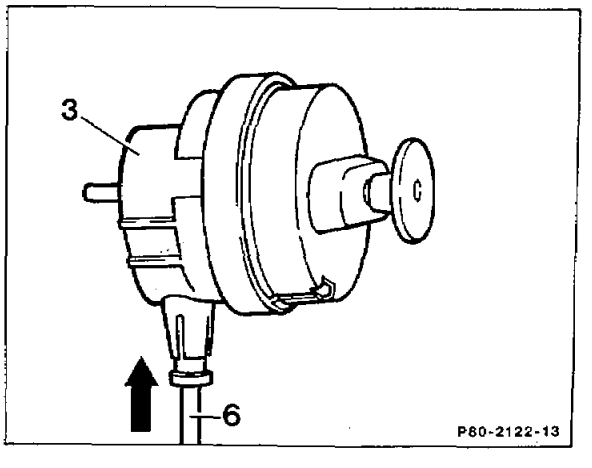

3 Fuel filler flap actuator
6 Pneumatic line

The ends of the pneumatic lines are marked. The markings indicate to which pneumatic actuator the line belongs.

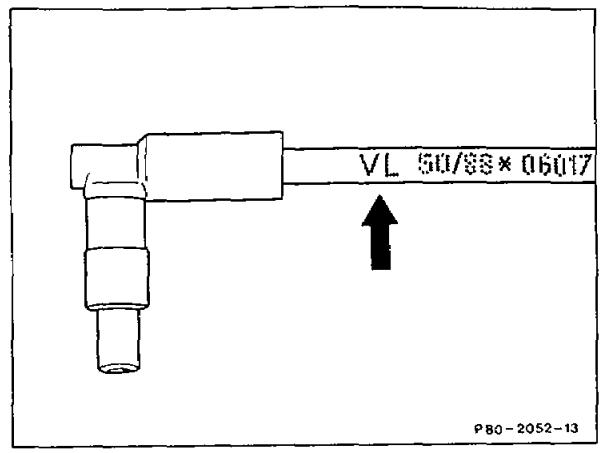

Marking	Actuator
VL	Left front door actuator
VR	Right front door actuator
HL	Left rear door actuator
HR	Right rear door actuator
HD	Trunk lid lock actuator
KE	Fuel filler flap actuator