Contents

1 · General Information and Maintenance

Model Identification

There are three basic models of Winnebago motor homes, the Brave, Indian, and the Chieftan. However there are many variations of these three models.

There is a Winnebago Industries, Inc. identification plate located in the coach near the driver's area. This plate should be displayed in plain sight. The information given on the Winnebago ID plate is the date of manufacture of both the coach and the chassis, the Gross Vehicle Weight Rating (GVWR), the Front and Rear Gross Axle Weight Rating (GAWR), the Vehicle Identification Number (VIN), and the Model Number.

Winnebago identification plate mounted in the coach

Serial Number Identification

VEHICLE

As mentioned above, the VIN is located on the Winnebago ID plate located

Dodge identification plate mounted in the coach

in the driver's area. The VIN is also located on a Dodge ID plate also located in the coach, usually near the door. In addition to all of the information given on the Winnebago ID plate, the Dodge ID plate identifies the chassis model and gives the Truck Order Number (TON).

The VIN is deciphered in the following manner:

The first and second digit identify the chassis model.

The third digit identifies the chassis as a motorhome chassis (body type). The code being "0."

The fourth digit identifies the GVW class.

The fifth digit identifies the engine installed in the chassis.

The sixth digit identifies the year in which the chassis was made.

The seventh digit identifies the plant at which the chassis was assembled.

The final six digits are the assembly plant's building sequence number. All models begin with 000,001.

NOTE: *The Dodge VIN number is also stamped on the outside of the right-side frame rail, ahead of the front wheel. The Winnebago and Dodge VIN's are not the same.*

ENGINE

The engine serial number and parts replacement number on the 318 V8 are located on the front of the engine block, below the left cylinder head.

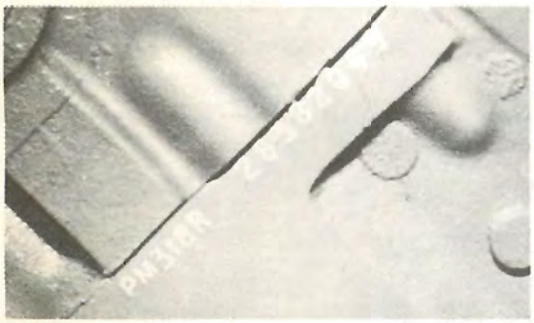

The location of the identification numbers on a 318 V8

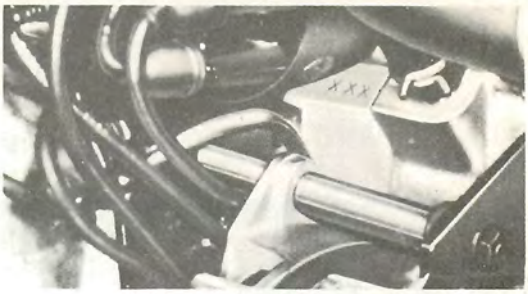

The location of the identification numbers on a 400, 413, and 440 V8

The location of the identification numbers on a pre-1973 413 V8

The serial number and replacement parts number on the 413, and 440 V8 engines is located on the left-side of the engine block, beneath the distributor.

TRANSMISSION

The transmission identification numbers are stamped on a pad provided on the left-side of the case oil pan flange.

Routine Maintenance

AIR CLEANER

The carburetor air cleaner filter element should be cleaned every six months or 8,000 miles, whichever comes first,

1st and 2nd Digit Truck Model	3rd Digit Series Body Type	4th Digit GVW Class	5th Digit Eng. Displacement Cu. In.	6th Digit Model Year	7th Digit Assembly Plant
M3—M300 M4—M375 R3—RM300 R4—RM350 R5—RM400	O—Motor Home Chassis	C—10,001# to 14,000#	A—440-3 G—318-3 N—413-1	3—1973	J—Windsor S—Warren

NOTE: The final six digits indicate the Building Sequence. All models begin with Number 000,001.

Dodge VIN code

and replaced every 24,000 miles under normal operating conditions. Operating the motor home in dusty areas will require that the air filter be changed more frequently.

To service the air cleaner, remove the engine cover and unscrew the wing nut holding the assembly onto the top of the carburetor. Lift off the top of the air cleaner assembly and remove the paper element. Remove the air cleaner outer wrapper (if so equipped) and wash the wrapper in kerosene or similar solvent. Shake or blot the wrapper dry. When a polyurethane sponge-like outer wrapper is used, it should be saturated with SAE 10W-30 engine oil after being washed and blotted dry. Squeeze the polyurethane wrapper tightly in an absorbent towel or cloth to remove excess oil, leaving the wrapper moist.

Clean the paper element by blowing out the dirt gently with compressed air. Direct the air from the inside out, and keep the nozzle at least 2 in. away from the element to avoid damaging it. It is recommended that you do not tap the element to shake dirt particles loose or direct the airflow from the outside in. Also under no circumstances is the paper filter element to be immersed in any type of liquid.

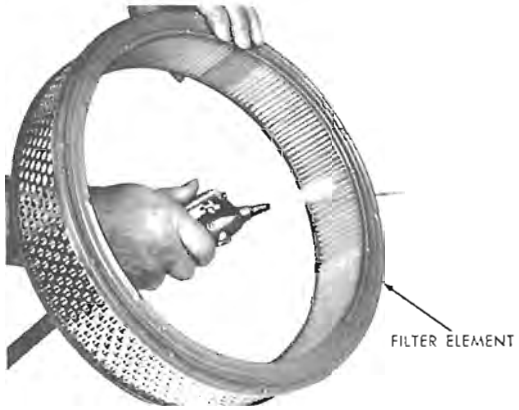

Cleaning a dry paper air cleaner element with compressed air

If the filter element is saturated with oil for more than ½ its circumference, replace the filter element and wrapper assembly and check the operation of the PCV system.

Wash the air cleaner body and cover with cleaning solvent and wipe it dry. Replace the paper element and wrapper (if so equipped) in the air cleaner body and secure it firmly. Replace the air cleaner assembly on the carburetor and


Replace an air cleaner with any damage, such as this one

install the attaching wing nut. Replace the engine cover.

PCV

All of the engines are equipped with a closed crankcase ventilation system. This system consists of a positive crankcase ventilation (PCV) valve mounted on the valve cover with a hose extending from the valve to the base of the carburetor. A closed crankcase inlet air cleaner with a hose connecting it to the carburetor air cleaner housing provides a source of air for the system. The crankcase inlet air cleaner is remotely mounted above the oil fill inlet.

When the engine is running, air is drawn from the carburetor air cleaner to the crankcase inlet air cleaner through the connecting hose. From the crankcase inlet air cleaner, air mixes with vapors in the space beneath the valve cover and the crankcase and is then drawn through the PCV valve in the valve cover, through the connecting hose and into the carburetor base. From there the vapors are drawn through the intake manifold and into combustion chamber where they are burned.

Deposits can accumulate in the valve, hoses and carburetor parts during normal service. All crankcase ventilation system components must be kept clean to maintain efficient operation and longer life. The PCV system should be serviced every 12,000 miles or 12 months, whichever comes first.

After the first 12,000 miles or 12 months inspect the PCV valve to make sure that it is operating freely, clean the crankcase inlet air cleaner and inspect and clean the carburetor air cleaner element. After the next 12,000 miles replace the PCV valve and carburetor air cleaner.

If the motor home is used extensively for short trips with frequent idling, the PCV system will require servicing more frequently.

Inspect the PCV system in the following manner:

1. With the engine operating at idle speed, remove the PCV valve from the rocker cover. If the valve is not plugged, a hissing noise will be heard as air passes through the valve, and a strong vacuum should be felt when you place a finger over the valve inlet.

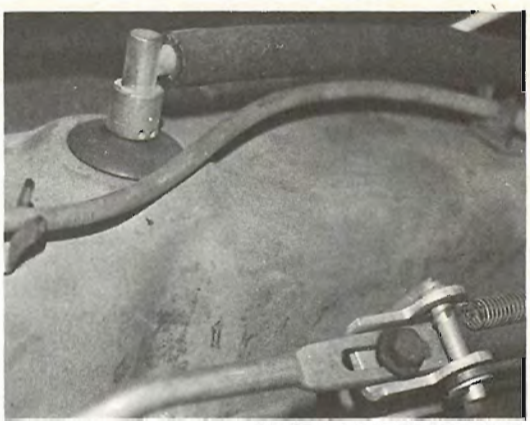

The PCV valve

2. Reinstall the PCV valve, then remove the crankcase inlet air cleaner. Loosely hold a piece of stiff paper over the opening in the valve cover.

After allowing about a minute for the crankcase pressure to drop, the paper should be sucked against the opening in the valve cover.

3. With the engine stopped, remove the PCV valve from the valve cover and shake it. If the valve mechanism is free, a clicking noise will be heard.

If the PCV system meets the tests outlined above, no further service is required. If the PCV valve does not rattle when it is shaken and if you cannot hear a hissing noise as outlined in Step 1 above, then the PCV valve must be replaced.

If the paper is not sucked against the opening in the rocker cover with noticeable force as outlined in Step 2 above, after the PCV valve has been replaced, then the ventilator hoses and the passages in the lower part of the carburetor will have to be cleaned.

1. Clean the carburetor hose in a suitable solvent. Be sure that the solvent used does not harm the rubber hose.

2. Remove the carburetor. Turn a ¼ in. drill through the carburetor lower passages to dislodge solid particles, then blow the passages clean with compressed air. Be careful not to remove any metal. Use a smaller drill as necessary.

NOTE: *It is not necessary to disassemble the carburetor for this service.*

3. Clean the crankcase inlet air filter.

4. Clean the carburetor air cleaner.

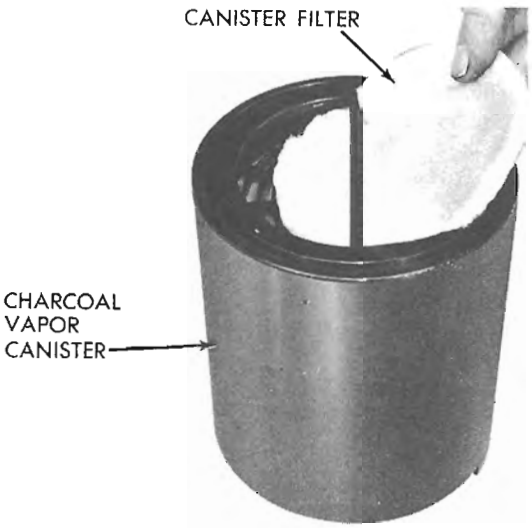

Removing the fuel vapor storage canister filter

EVAPORATIVE EMISSION CANISTER

The fuel vapor storage canister should be inspected and the filter element in the base of the canister replaced with a new element every 12,000 miles or 12 months. The canister is located inside the front of the right-side frame rail. The filter element should be replaced more often if the vehicle is driven under dusty conditions.

FLUID LEVEL CHECKS

Engine Oil

Check the engine oil level every time you fill the gas tank. Add oil only when the level on the oil level dipstick is at or below the "ADD OIL" mark. When you check the oil make sure that the vehicle is on level ground and that you push the dipstick into the tube as far as possible.

The "FULL" mark on the dipstick shows the correct level of the crankcase oil after the engine has been standing for some time. As soon as the engine starts running, the oil level will drop slightly because of the filling of oil passages and channels. A quart of oil should be added to the crankcase when the oil level reaches, or falls below, the "ADD OIL" mark on the dipstick. Never allow the oil level to remain below the "ADD OIL" mark on the dipstick.

Automatic Transmission

The fluid level in an automatic transmission is checked when the transmission is at operating temperature. If the

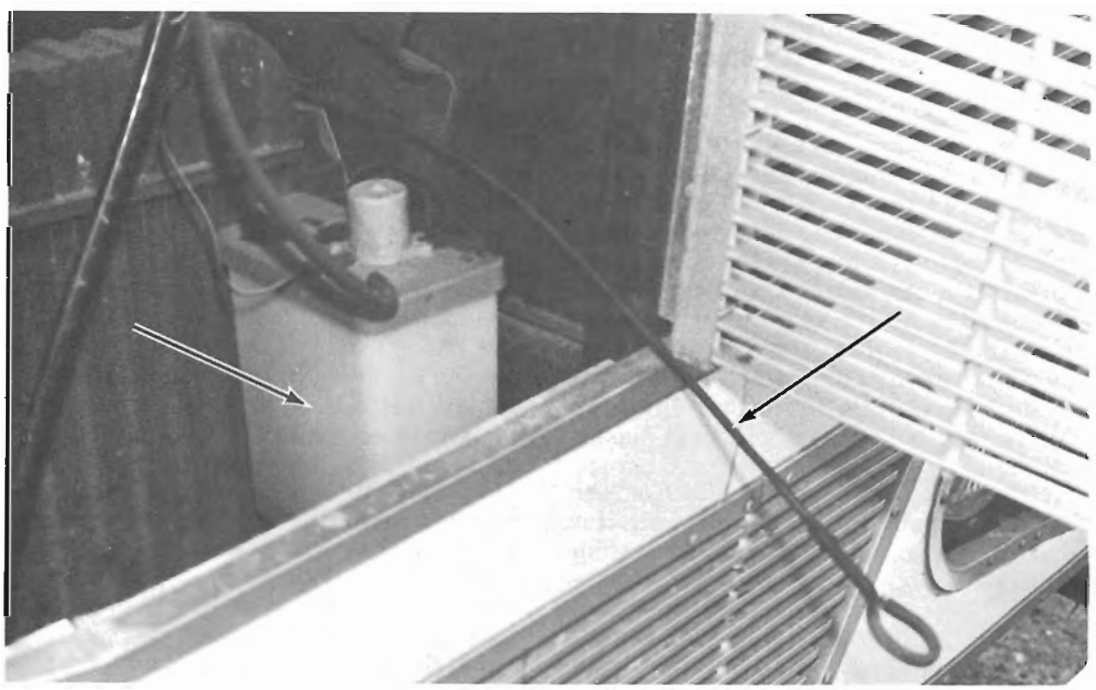

The engine oil dipstick (right arrow) is accessible from outside the front of the vehicle; left arrow indicates windshield washer solution reservoir

vehicle has been sitting and is cold, drive it at highway speeds for at least 20 minutes to warm up the transmission.

1. With the transmission in Park, the engine running at idle speed, the foot brakes applied and the vehicle resting on level ground, move the transmission gear selector through each of the gear positions, including Reverse, allowing time for the transmission to engage. Return the shift selector to the Park position and apply the parking brake. Do not turn off the engine, but leave it running at idle speed.

2. Clean all dirt from around the transmission dipstick cap and the end of the filler tube.

3. Pull the dipstick out of the tube, wipe it off with a clean cloth, and push it back into the tube all the way, making sure that it seats completely.

4. Pull the dipstick out of the tube again and read the level of the fluid on the stick. The level should be between the "ADD" and "FULL" marks. If fluid must be added, add enough fluid through the tube to raise the level up to between the "ADD" and "FULL" marks. Do not overfill the transmission because this will cause foaming and loss of fluid through the vent and malfunctioning of the transmission fluid. Use only DEXRON® transmission fluid.

Brake Master Cylinder

The brake master cylinder is located to the left of the engine, under the engine cover. Before removing the master cylinder reservoir cap, make sure that the vehicle is resting on level ground and clean all dirt away from the top of the master cylinder. Pry off the retaining clip or unscrew the hold-down bolt or cap and remove the cap. The brake fluid level should be within ¼ in. of the top of the reservoir on both single and dual master cylinders.

If the level of the brake fluid is less than half the volume of the reservoir, it is advised that you check the brake system for leaks. Leaks in a hydraulic brake system most commonly occur at the wheel cylinders. With disc brakes, the fluid level can be expected to fall as the brake pads wear.

There is a rubber diaphragm in the top of the master cylinder cap on those caps

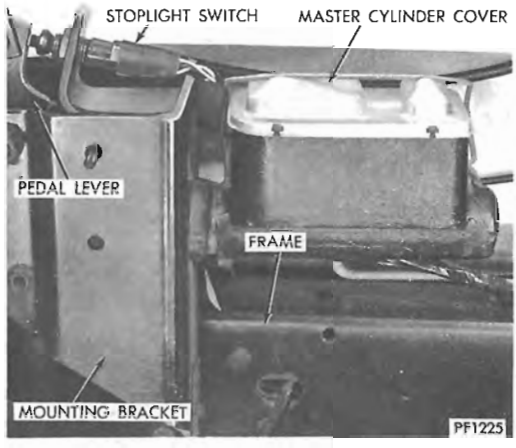

The location of the brake master cylinder

which do not screw on. As the fluid level lowers in the reservoir due to normal brake shoe or pad wear or leakage, the diaphragm takes up the space. This is to prevent the loss of brake fluid out the vented cap and contamination by dirt. After filling the master cylinder to the proper level with brake fluid, but before replacing the cap, fold the rubber diaphragm up into the cap, then replace the cap on the reservoir and tighten the retaining bolt or snap the retaining clip into place.

Coolant

All RM350 and RM400 chassis have a coolant reserve cooling system as standard equipment. The RM375 and RM300 chassis has a "standard" type cooling system without the reserve tank. The coolant reserve system is optional on the RM300 chassis.

The coolant level is checked on the "standard" system by removing the radiator cap on the filler extension and observing the level of the coolant. With the vehicle resting on a level surface, the coolant level should be maintained 1–¼ in. below the bottom of the filler neck. The coolant level should only be checked when the engine is cool; never when it is hot.

CAUTION: *If the radiator cap must be removed while the engine is hot, cover the cap with a thick cloth folded over a few times to insulate your fingers from the heat. The cloth will also protect you from scalding water should the cap blow off. Turn the cap coun-*

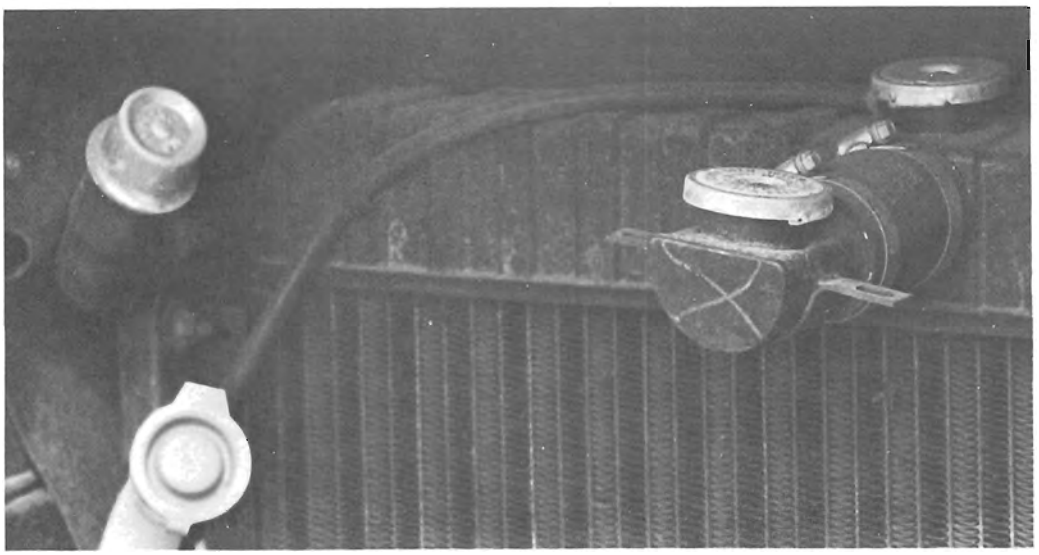

Coolant filler and engine oil filler

terclockwise slowly until pressure can be heard escaping. Allow all pressure to escape from the radiator before completely removing the radiator cap.

When you check the level of the coolant take note of the condition of the fluid. If the solution is dirty or rusty and there is sediment on the inside of the radiator, the coolant should be drained and the system flushed and refilled with new coolant.

For best protection against freezing and overheating, maintain an approximate 50% water and 50% antifreeze mixture in the cooling system. It is recommended that ethylene glycol type antifreeze be installed. This will afford protection against freezing to approximately −34°F. Never mix brands of antifreeze to avoid possible chemical damage to the cooling system.

Avoid using water that is known to have a high alkaline content or is very hard, except in emergency cases. Drain and flush the cooling system as soon as possible after using such water.

Check the front of the radiator core occasionally for bugs, leaves and other foreign material that could restrict the flow of air through the radiator core. Flush out any material from the back side of the radiator with a water hose.

Rear Axle

Clean the area around the fill plug which is located in the housing cover, before removing the plug. The lubricant level should be maintained to the bottom of the fill hole with the axle in its normal running position. If lubricant doesn't appear at the hole when the plug is loosened or removed, additional lubricant should be added. Use hypoid gear lubricant SAE 90 if the ambient temperature is not expected to go below −10°F, SAE 80 in temperatures below −10°F, and SAE 140 in temperatures above 90°F.

Power Steering Reservoir

Position the vehicle on level ground and run the engine until the fluid is at normal operating temperature. Turn the steering wheel all the way to the left and right several times. Position the wheels in the straight-ahead position, then shut off the engine. When the filler cap is removed from the top of the power steering pump, the level should be observed as follows: On the TRW pump with the 3 in. filler neck—2 in. below the top of the filler neck. On the TRW pump with the 6 in. filler neck—at the joint of the filler neck and reservoir. The Saginaw power steering pumps are equipped with a dipstick attached to the cap. The fluid level should be to the level indicated on the dipstick.

Replenish the fluid with only petroleum fluids specially formulated for minimum effect on rubber hoses. Never use gear oil or automatic transmission fluid.

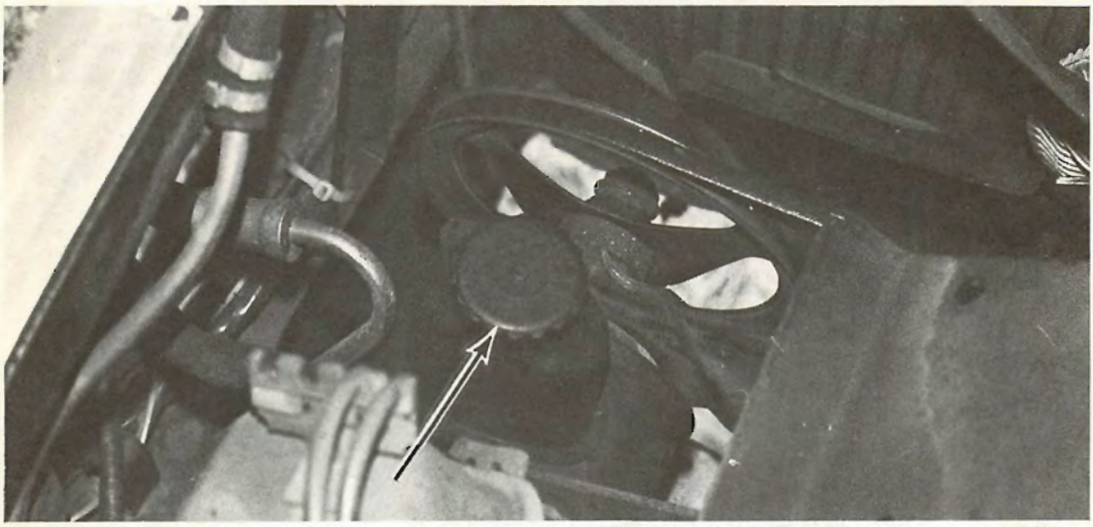

Location of the power steering pump and pump filler cap (arrow) (Saginaw)

Battery

Check the fluid level in the battery about once a month and more often in hot and dry weather. The level should be at the bottom of the filler hole. Electrolyte should at least cover the plates.

Tap water can be used to fill the battery, except in areas where the water is known to have a high mineral or alkali content. Use distilled water in these areas.

Corrosion or accumulated dry battery acid can be removed from the terminals with a solution of baking soda or ammonia and water. Keep the cleaning solution out of the battery cells for it will weaken the electrolyte.

After cleaning the terminals with cleaning solution and a stiff wire brush or battery post cleaning tool, flush them with water. In order to prevent corrosion cut a 3 in. circle of felt with a hole in the middle large enough to fit the felt over the battery posts. Soak the felt in oil and fasten the terminal clamps to the posts

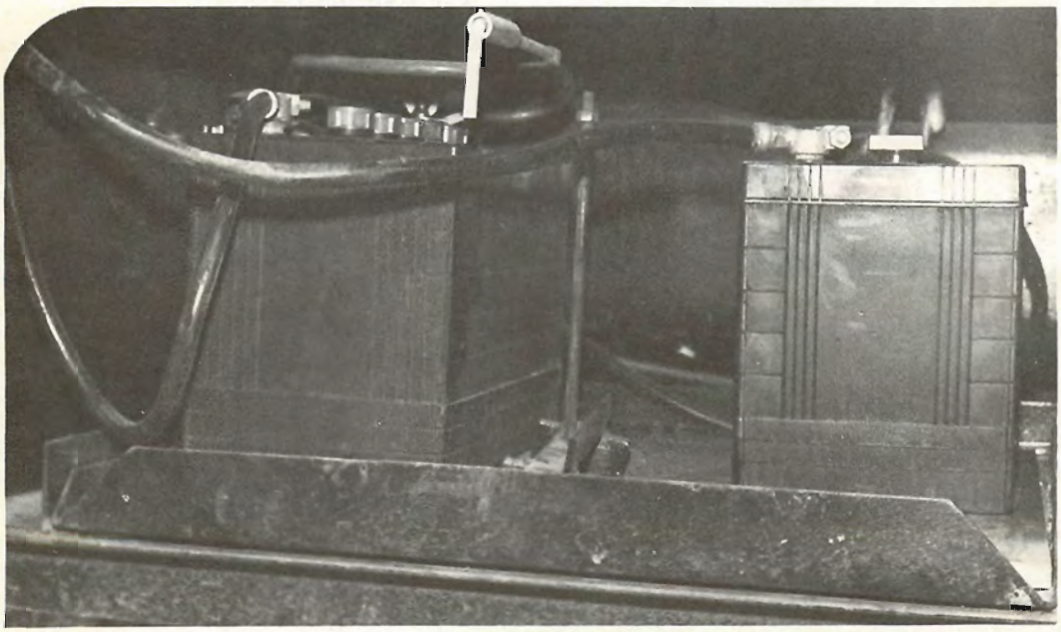

The batteries are located in the battery compartment and are serviced from outside the vehicle

with the felt in place. Make sure that you clean the inside of the terminal clamps before installing them. After the clamp nuts have been tightened, coat the entire terminal with a light grease.

NOTE: *Tighten the clamp nuts to only 3 ft lbs of torque. Do not overtighten for damage to the battery case may occur.*

Keep in mind that in cold weather the efficiency of the battery is reduced. It might be a good idea to have the battery charged every few weeks if the weather stays at very low temperatures for extended periods of time. If you add water to the battery during freezing weather, drive the vehicle for several miles to mix the water with the battery electrolyte.

Capacities

Year	Engine No. Cyl Displacement (cu in.)	Engine Crankcase①	Automatic Transmission②	Drive Axle (pts)	Cooling System with Heater (qts)
All	318 V8	6	19	7	22③
	413 V8	6	19	7	27
	440 V8	6	19	7	29

① Add 1 qt for new filter
② Pts to refill after draining
③ 24 in RM300 and RM350 chassis

TIRES AND WHEELS

Due to the size and weight of a motor home vehicle, the size, weight, and design of the tires and wheels on the vehicle may be unfamiliar to the average person, who up until now has only maintained the family sedan.

Special tools and techniques are required to dismount and mount tires to the rims and in the case of dual rear wheels, mount the wheel/rim assembly onto the vehicle.

It is not recommended that you attempt to dismount a tire from a rim or remount it. This service should be performed by tire service station personnel equipped to handle truck tires.

Also, it is recommended that owners change tires only when no other service facilities are available.

Since spare tires and carriers are optional, your motor home may not have a spare. If you should get a flat tire at the rear, it is possible to drive the vehicle with the flat tire since the tire next to it will support the motor home long enough for you to reach a service station to have the flat tire repaired. If one of the front tires should fail, you can remove one of the outside rear tires and install it on the front, replacing the flat tire, and drive to a service station with one rear tire on one side. In both cases, do not drive above 25 mph with one of the rear tires removed, since driving in excess of this speed may overheat the single rear tire causing a blowout.

Tire Rotation

When all the tires on the vehicle are of the same size and type (ply rating), it is recommended that under normal operation the tires be rotated no later than every second oil change. Inspect the tires at every oil change and should irregular tread wear be evident, rotate the tires at that time. It is recommended that you include the spare tire (if you have one) in the rotation procedure to get the longest possible tire life from all of the tires. Replace the tire that is worn the most with the spare. In following tire rotations, make the tire with the most tread wear the spare.

Inflation pressures should be checked and adjusted once a week and every time the tires are rotated. The tires should also be balanced every time they are rotated.

If the tires show abnormal wear pat-

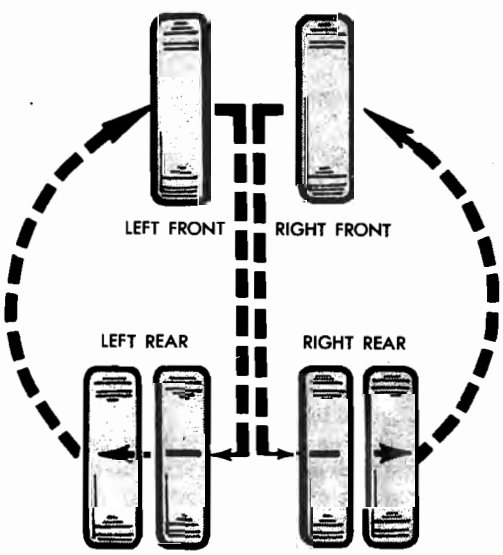

Tire rotation sequence

terns, have the axle alignment and wheel balance checked.

8 Stud Wheels—M300, RM300, and RM350

These wheels have 4 equally-spaced stud holes which are coined outward and 4 which are coined inward. The outer wheel must be installed so the coined stud holes match the coined stud holes of the inner wheel. A locating pin in the hub will assist you in properly orienting the inner and outer wheels. Two types of wheel attaching nuts are used on these wheels: coned nuts, and flanged nuts. Coned nuts (M300 chassis only) are tightened to 200 ft lbs of torque. Flanged nuts, which are more "heavy-duty," are tightened to 325 ft lbs of torque. The tires of both dual wheels must be completely off the ground when tightened to insure wheel centering and maximum wheel clamping. Tighten the wheels in the following manner:

1. Tighten the wheel nuts in the numbered sequence until they are snug. The same sequence is used for coned and flanged nuts.
2. Tighten the nuts again in the same pattern to the final torque specification.
3. Check the wheels after the first 100 miles to make sure that they are tightened to the specified torque and at every oil change thereafter.

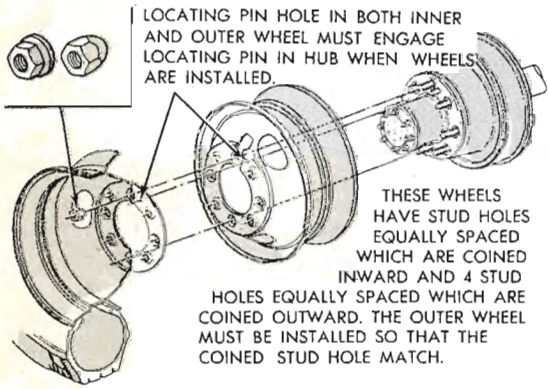

Mounting 8 stud wheels

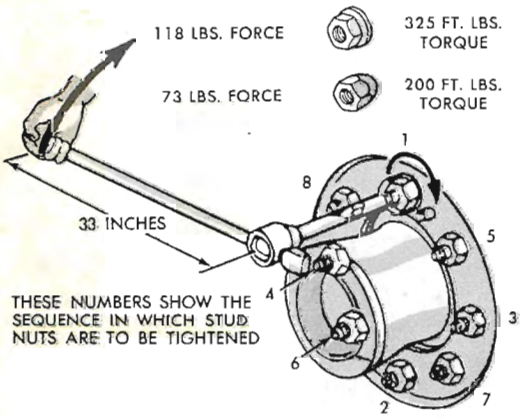

Tightening sequence for 8 stud wheels

5 Stud Wheels—RM375 and RM400

On these wheels there are actually two sets of wheel attaching nuts, one set for the inner wheel and one set for the outer wheel. The inner wheel nut threads onto the center mounting stud and bears against the inner wheel. The outer wheel nut threads onto the inner wheel nut and bears against the outer wheel only. If the inner wheel nut is not tightened to the proper torque, the mounting stud nuts may loosen; then, when the outer nut is tightened, only the outer wheel will be secured. The inner wheel may still be loose enough to move on the mounting studs, causing the stud holes in the inner wheel to wear.

To check the torque on the nuts, loosen the large outer nuts until the outer wheel is loose. Tighten the small inner nuts to 450–500 ft lbs of torque. This tightens the inner wheel only. Next, tighten the large outer nuts to 450–500 ft lbs of torque. Both the inner and outer nuts must be tightened to within the 450–500 ft lbs range. However, to facilitate removal of the wheels, it is recommended that the inner nuts be tightened more than the outer nuts so the inner nuts do not loosen when the outer nuts are removed. Tighten the nuts in a cross pattern.

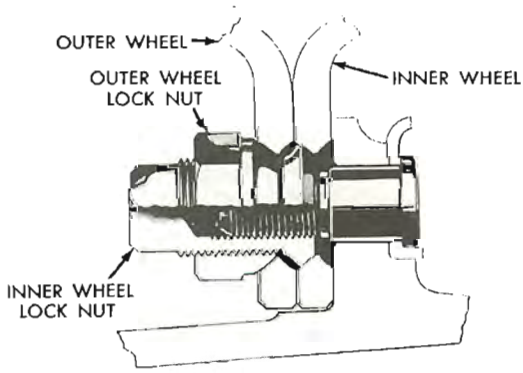

Mounting 5 stud wheels

Tire Inflation Chart

Single tires on M300 and M375 models before Jan. 1, 1973

Tire Size	Tire Type	Ply and Load Range	Max Cap (lbs)	Tire Load Capacity at Various Cold Inflation Pressures (lbs Per Square Inch)								
				35	40	45	50	55	60	65	70	75
7.00-16	Tube	6-C	1800	1560	1680	1800	—	—	—	—	—	—
7.50-16	Tube	8-D	2440	1770	1930	2060	2190	2310	2440	—	—	—
7.50-17	Tube	8-D	2800	—	—	—	2110	2270	2410	2540	2680	2800
8.00-16.5	Tubeless	6-C	1730	1490	1610	1730	—	—	—	—	—	—
8.00-16.5	Tubeless	8-D	2045	1490	1610	1730	1840	1945	2045	—	—	—
8.00-16.5	Tubeless	10-E	2330	1490	1610	1730	1840	1945	2045	2145	2240	2330

Dual tires on M300 and M375 models before Jan. 1, 1973

Tire Size	Tire Type	Ply and Load Range	Max Cap (lbs)	Tire Load Capacity at Various Cold Inflation Pressures (lbs Per Square Inch)								
				35	40	45	50	55	60	65	70	75
7.00-16	Tube	6-C	1580	1365	1475	1580	—	—	—	—	—	—
7.50-16	Tube	8-D	2140	1565	1690	1850	1930	2040	2140	—	—	—
7.50-17	Tube	8-D	2460	—	1850	1990	2110	2230	2350	2460	—	—
8.00-16.5	Tubeless	6-C	1520	1310	1415	1520	—	—	—	—	—	—
8.00-16.5	Tubeless	8-D	1800	1310	1415	1520	1620	1710	1800	—	—	—
8.00-16.5	Tubeless	8-E	2050	1310	1415	1520	1620	1710	1800	1885	1970	2050

Tubeless tires used on all models after Jan. 1, 1973

Tire Size	Ply and Load Range	Max Cap (lbs)	Tire Load Capacity at Various Cold Inflation Pressures (lbs Per Square Inch)						
			30	35	40	45	50	55	60
Used as Singles									
8-17.5	6-C	2075	1640	1790	1940	2075	—	—	—
8-17.5	8-D	2455	1640	1790	1940	2075	2205	2335	2455
Used as Duals									
8-17.5	6-C	1820	1445	1575	1700	1820	—	—	—
8-17.5	8-D	2155	1445	1575	1700	1820	1935	2050	2155
Used as Singles									
8-19.	8-D	2800	2110	2270	2410	2540	2680	2800	
Used as Duals									
8-19.5	8-D	2460	2110	2230	2350	2460	—	—	

NOTE: *For special operating conditions, cold inflation pressures may be increased up to 10 psi (not to exceed 85 psi) above those indicated in the table with no increase in loads. For sustained high-speed driving over 60 mph, cold inflation pressures must be increased 10 psi above those specified by the table for the load being carried (but not to exceed 85 psi). Where the 10 psi pressure adjustment for sustained high-speed is limited by the maximum of 85 psi, speed must be limited to 60 mph. Cold inflation pressure must never exceed 85 psi.*

FUEL FILTER

The fuel filter is located in the fuel line between the fuel pump and the carburetor.

The fuel filter used on 413 engines is a replaceable paper element type. Disassemble, clean the case and replace the element every 10,000 miles or every 6 months, whichever comes first. Replace the filter using new hose clamps. After replacement, run the engine and check the filter for fuel leaks.

The fuel filter used since 1971 is a paper element throwaway type. Remove the fuel filter, discard and replace it with a new one every 24,000 miles, using new hose clamps to secure it in the fuel line.

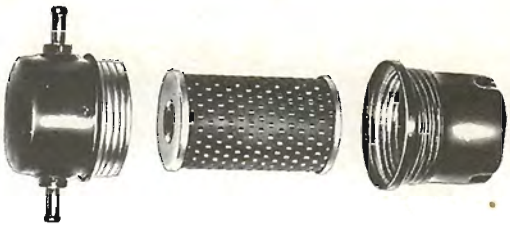

Replaceable element type fuel filter

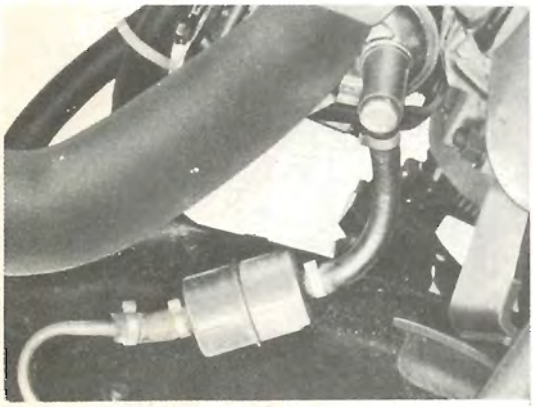

Inline throwaway type fuel filter

Lubrication

OIL AND FUEL RECOMMENDATIONS

All of the engines installed in Winnebago motor homes are designed to operate in normal use on fuel having a minimum octane rating of 91 (Research Method) or an antiknock index minimum numerical value of 2 (Gasoline Classification Method). However, due to the fact

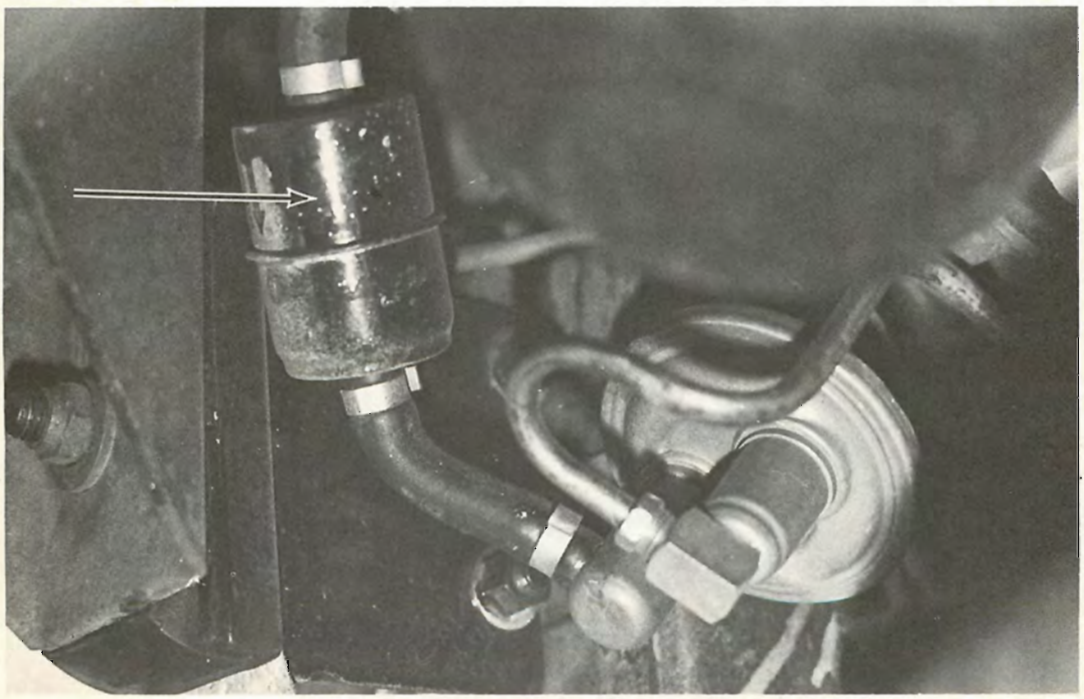

Gain access to the fuel filter (arrow) from under the vehicle

that gasolines vary in actual octane and antiknock properties, adjustments to the engine's ignition system within specifications (retard the timing) or different fuels may be required to avoid predetonation.

Many factors help to determine the proper oil for your motor home. The big question is what viscosity to use and when. The question of viscosity revolves around the lowest anticipated ambient temperature to be encountered before your next oil change. The recommended viscosity for sustained temperatures ranging from −10°F to above 32°F are listed below.

Lowest Sustained Ambient Temperature Anticipated	*Recommended Viscosity Grade of Oil*
Above 32° F	SAE 30, 40, SAE 10W-30, SAE 10W-40, SAE 10W-50, SAE 20W-40, SAE 20W-50
32° F to 10° F	SAE 10W-30, SAE 10W-40, SAE 10W-50, SAE 20W-20
10° F to −10° F	SAE 10W, * SAE 10W-30, SAE 10W-40, SAE 10W-50, SAE 5W-20, SAE 5W-30, SAE 5W-40
Below −10° F	SAE 5W-20, SAE 5W-30, SAE 5W-40

* A sustained speed of 65 mph or higher should not be maintained with SAE 10W oil in the engine because the engine will force oil past the rings and burn it in the combustion chamber. Oil consumption will be higher than normal.

NOTE: *Always use detergent oil. Detergent oil does not clean or loosen deposits, it merely prevents or inhibits the formation of deposits.*

OIL CHANGES

Engine

The engine oil is to be changed every 4,000 miles and the oil filter every other oil change, starting with the first oil change. However, it won't hurt to change the oil 1,000 miles sooner and the oil filter every time the oil is changed. Changing the oil filter at every other oil change still leaves a quart of dirty oil in the filter. In fact Chrysler Corporation recommends that the oil and filter be changed every 2,000 miles if the vehicle is used under abnormal conditions, such as short trips, prolonged and frequent idling and dusty conditions.

Before draining the oil, make sure that the engine is at operating temperature. Hot oil will hold more impurities in suspension and will flow better, allowing the removal of more oil and dirt. To get the engine hot enough, drive the vehicle for 15 minutes at expressway speeds or the equivalent in city driving.

Drain the oil into a suitable receptacle. After the drain plug is loosened, unscrew the plug with your fingers, using a rag to shield your fingers from the heat. Push in on the plug as you unscrew it so that you can feel when all of the screw threads are out of the hole. You can then remove the plug quickly with the minimum amount of oil running down your hand and you won't have to fish for it in the bottom of a pan of hot oil. Be careful of the oil. If it is at operating temperature, it is hot enough to burn you.

Automatic Transmission

In addition to checking the level of the transmission fluid at every oil change and adding fluid to maintain the proper fluid level, the fluid and filter should be changed, and the bands adjusted every 20,000 miles.

The transmission is filled at the factory with a high quality fluid which both transmits power and lubricates; it should last 20,000 miles. In most cases, the need to change the fluid in the automatic transmission under normal use before 20,000 miles will never arise. But since this is a motor home and the transmission most likely will be subjected to more severe operating conditions than a conventional vehicle, the fluid may have to be changed before the recommended 20,000 miles. Also an internal leak in the radiator could develop and contaminate the fluid, necessitating fluid replacement.

The extra load of operating the motor home with a full load of provisions, peo-

ple, water, fuel, and possibly pulling a trailer over adverse terrain, such as over mountains or desert, causes the transmission to create more heat due to increased friction. This extra heat is transferred to the transmission fluid and, if the oil is allowed to become too hot, it will change its chemical composition or become scorched. When this occurs, valve bodies become clogged and the transmission doesn't operate as efficiently as it should. Serious damage to the transmission could result.

You can tell if the transmission fluid is scorched by noting a distinctive "burned" smell and discoloration. Scorched transmission fluid is dark brown or black as opposed to its normal bright, clear red color. Since transmission fluid "cooks" in stages, it may develop forms of sludge or varnish. Pull the dipstick out and place the end on a tissue or paper towel. Particles of sludge can be seen more easily this way. If any of the above conditions do exist, the transmission fluid should be completely drained, the filtering screens cleaned or replaced, the transmission inspected for possible damage and new fluid installed.

To replace the fluid in the Dodge Loadflite automatic transmission, follow the procedure given below:

1. Place a drain container with a large opening under the transmission. A large drain pan is best.

2. Loosen the pan bolts and tap the pan at one corner to break it loose allowing the fluid to drain, then remove the oil pan.

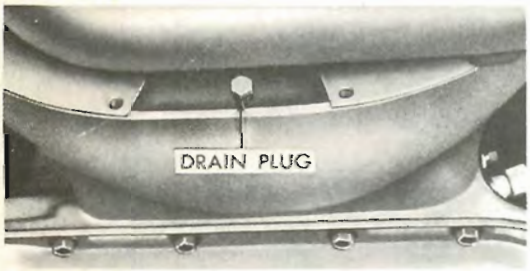

Location of the torque converter drain plug

3. Remove the access plate in the front of the converter and remove the drain plug allowing fluid to drain. Install and tighten the converter drain plug to 110 in. lbs of torque. Install the access plate.

4. Adjust both bands. See Chapter 6, "Automatic Transmission."

5. Install a new filter on the bottom of the valve body, and tighten the retaining screws to 35 in. lbs.

6. Clean the oil pan, and reinstall it using a new gasket. Tighten the oil pan bolts to 150 in. lbs.

7. Pour 6 qts of DEXRON type automatic transmission fluid through the filler tube.

8. Start the engine and allow it to idle for at least 2 minutes. Then, with the brakes applied, move the gear selector lever momentarily to each position, ending in the Neutral position.

9. Add sufficient fluid to bring the level to the "ADD ONE PINT" mark on the dipstick.

10. Recheck the fluid level after the transmission is at normal operating temperature. See "Level Checks." The level should be between the "FULL" mark and "ADD ONE PINT" mark on the dipstick. Make sure that the dipstick is fully seated on the filler tube to prevent dirt from entering.

Rear Axle

The lubricant in the rear axle should be changed every 32,000 miles under normal service or every 20,000 miles under severe service. The lubricant is removed with a suction pump. Refill the axle with the proper lubricant. See "Level Checks." Be sure to clean the area around the drain plug before removing the plug.

OIL FILTER CHANGES

The manufacturer recommends that the oil filter be changed every other oil change. See the "Engine" heading under "Oil Changes."

The oil filter is located on the right-side toward the rear of the engine on the 318 V8. On the 413 and 440 V8s, the oil filter is located on the front of the engine on the left-side.

To remove the filter you may need an oil filter wrench since the filter may have been fitted too tightly and the heat from the engine may have made it even tighter. A filter wrench can be obtained at an auto parts store and is well worth the investment, since it will save you a lot of grief. Loosen the filter with the filter

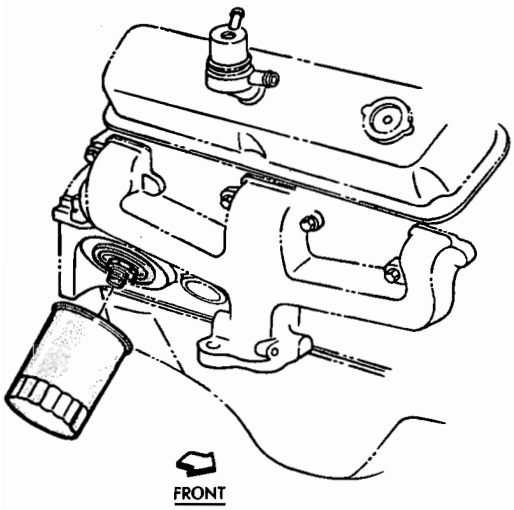

Location of the oil filter on the 318 V8

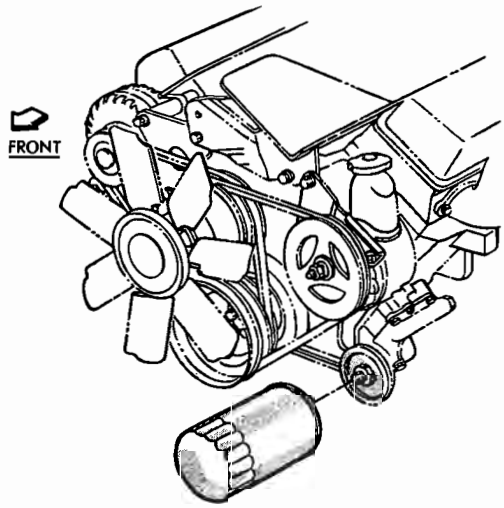

Location of the oil filter on the 413 and 440 V8 engines

wrench. With a rag wrapped around the filter, unscrew the filter from the boss to which it is mounted. Be careful of hot oil that will run down the side of the filter. Make sure that you have a pan under the filter before you start to remove it from the engine; should some of the hot oil happen to get on you, you will have a place to dump the filter in a hurry. Wipe the base of the mounting boss with a clean, dry cloth. When you install the new filter, smear a small amount of oil on the gasket with your finger, just enough to coat the entire surface, where it comes in contact with the mounting plate. When you tighten the filter, rotate it only a half-turn after it comes in contact with the mounting boss.

CHASSIS GREASING

The following chart indicates where the grease fittings and other lubrication points are located on the Dodge motor home chassis. The chassis should be greased every 2,000 miles and more often if the vehicle is operated in dusty areas or under heavy-duty conditions.

WHEEL BEARINGS

Service

FRONT

It is recommended that the wheel bearings be serviced (cleaned, inspected, repacked or replaced) every 24,000 miles.

Before handling the bearings, there are a few things that you should and should not do.

Do the following:

1. Remove all outside dirt from the housing before exposing the bearing.
2. Treat a used bearing as gently as you would a new one.
3. Work with clean tools in clean surroundings.
4. Use clean, dry canvas gloves, or at least clean, dry hands.
5. Clean solvents and flushing fluids are a must.
6. Use clean paper when laying out the bearings to dry.
7. Protect disassembled bearings from rust and dirt. Cover them up.
8. Use clean rags to wipe bearings.
9. Keep the bearings in oil-proof paper when they are to be stored or are not in use.
10. Clean the inside of the housing before replacing the bearing.

Do NOT do the following:

1. Don't work in dirty surroundings.
2. Don't use dirty, chipped, or damaged tools.
3. Try not to work on wooden work benches or use wooden mallets.
4. Don't handle bearings with dirty or moist hands.
5. Do not use gasoline for cleaning; use a safe solvent.
6. Do not spin-dry bearings with compressed air. They will be damaged.
7. Do not spin unclean bearings.

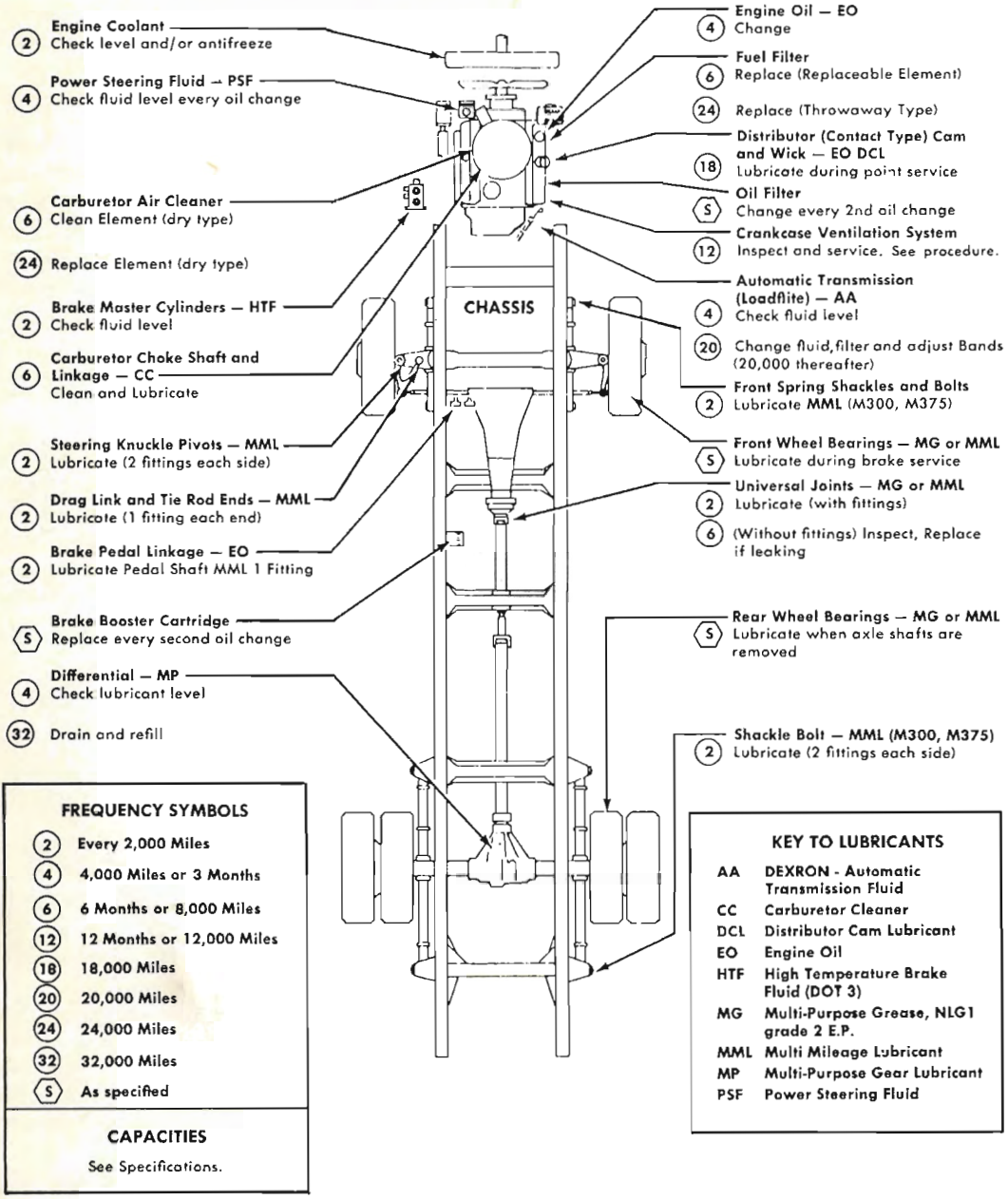

Lubrication and maintenance chart as recommended by the manufacturer

8. Avoid using cotton waste or dirty cloths to wipe bearings.

9. Try not to scratch or nick bearing surfaces.

10. Do not allow the bearing to come in contact with dirt or rust at any time.

To service the front wheel bearings, perform the following steps:

1. Jack the motor home up until the wheel to be serviced is off the ground and can spin freely. It is easier to check all of the bearings at the same time. If the equipment needed is available, raise the front end of the vehicle so that both front wheels are off the ground. Use jackstands or suitable blocks to support the vehicle. Make sure that the vehicle is completely stable before proceeding any further.

2. Remove the lug nuts and remove the wheel/tire assembly from the hub.

3. In the case of front disc brakes, remove the caliper assembly (see

Chapter 9) from the caliper adapter and off the disc brake rotor. Do not disconnect the brake line. Suspend the caliper from a wire hook or loop to avoid strain on the flexible hose.

4. Remove the grease cap with a screwdriver or pliers. If the cap is of the threaded type, you will have to use a large crescent wrench or an equivalent tool to remove the cap.

5. Remove the cotter pin and discard it. Cotter pins should never be reused.

6. Remove the nut lock and nut.

7. Wiggle the hub so that the thrust washer and outer bearing come loose and can be removed. Remove the thrust washer and outer bearing.

8. Remove the hub from the spindle and place it on a work surface, supported by two blocks of wood under the brake drum or rotor.

NOTE: *In the case of front drum brakes, if the hub will not remove easily, back off the brake shoe adjustment screw so that the shoes do not contact the brake drum. You will have to insert a thin screwdriver into the brake adjusting hole and push the adjusting lever away from the adjusting star wheel before backing off the brake adjustment. Be careful not to bend the adjusting lever.*

9. Place a block of wood or a drift pin through the spindle hole and tap out the inner grease seal. Tap lightly to avoid damage to the bearing. When the seal falls out, so will the inner bearing. Discard the seal.

Perform the above procedures to all wheels to be serviced.

10. Place all of the bearings, nuts, nut locks, washers and grease caps in a container of solvent. Use a light soft brush to thoroughly clean each part. Make sure that every bit of dirt and grease is rinsed off, then place each cleaned part on an absorbent cloth or paper and allow them to dry completely.

11. Clean the inside of the hub, including the bearing races, and the spindle. Remove all traces of old lubricant from these components.

12. Inspect the bearings for pitting, flat spots, rust, and rough areas. Check the races in the hub and the spindle for the same defects and rub them clean with a cloth that has been soaked in solvent. If the races show hairline cracks or worn shiny areas, they must be replaced with new parts. The races are installed in the hub with a press fit and are removed by driving them out with a suitable punch or driver. Place the new races squarely onto the hub and place a block of wood over them. Drive the race into place with a hammer, striking the block of wood. Never hit the race with any metal object.

Replacement seals, bearings, and other required parts can be bought at an auto parts store. The old parts should be taken along to be compared with the replacement parts to insure a perfect match.

13. Pack the wheel bearings with grease. There are special devices made for the specific purpose of greasing bearings, but, if one is not available, pack the wheel bearings by hand. Put a large dab of grease in the palm of your hand and push the bearing through it with a sliding motion. The grease must be forced through the side of the bearing and in between each roller. Continue until the grease begins to ooze out the other side and through the gaps between the rollers; the bearing must be completely packed with grease.

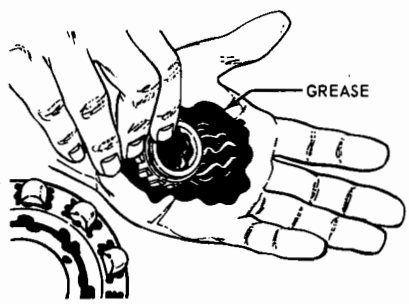

Packing the wheel bearings by hand. Make sure that you get as much grease as possible between the rollers

NOTE: *Sodium base grease is not compatible with lithium base grease. Be careful not to mix the two types. The best way to prevent this is to completely clean all of the old grease from the hub and spindle before installing any new grease.*

14. Turn the hub assembly over so that the inner side faces up, making sure that the race and inner area are clean, and drop the inner wheel bearing into place. Using a hammer and a block of wood, tap the new grease seal in place. Never hit

the seal with the hammer directly. Move the block of wood around the circumference until it is seated properly.

15. Slide the hub assembly onto the spindle, and push it as far as it will go, making sure that it has completely covered the brake shoes. Keep the hub centered on the spindle to prevent damage to the grease seal and the spindle threads.

16. Place the outer wheel bearing in place over the spindle. Press it in until it is snug. Place the washer on the spindle after the bearing. Screw on the spindle nut and turn it down until a slight binding is felt.

17. With a torque wrench, tighten the nut to 50 ft lbs to seat the bearings. Back off the adjusting nut 1/6 to 1/4 of a turn. The nut should not be more than finger-tight. Do not back off the nut less than 1/6 of a turn. Install the nut lock over the nut so that the cotter pin hole in the spindle is aligned with a slot in the nut lock. Install the cotter pin.

18. Bend the longer of the two ends opposite the looped end out and over the end of the spindle. Trim both ends of the cotter pin just enough so that the grease cap will fit, leaving the bent end shaped over the end of the spindle.

19. Install the grease cap and the wheel/tire assembly. The wheel should rotate freely with no noise or noticeable end-play.

20. Install the disc brake caliper if applicable (see Chapter 9).

21. Adjust the brakes.

REAR

1. Jack the rear wheels of the motor home until they are just free of the ground.

2. Remove the axle shaft flange nuts and lockwashers. Rap the axle shaft sharply in the center of the flange with a hammer to free the locating dowels. Remove the tapered dowels and the axle shaft.

3. Remove the outer locknut, lockring, and the inner adjusting nut. Use the special wrench made for the locknut and the adjusting nut or a brass drift and a hammer to turn and unscrew them. Be careful not to damage the threads.

4. The rear wheel/tire and hub assemblies can be removed with a dolly cradle or by sliding them off on an oiled sheet of sheet metal. If a dolly is used, follow the manufacturer's instructions. To use the oiled sheet metal: place an oiled piece of sheet metal 10 in. wide and 24 in. long under the wheels. Lower the vehicle until the wheels just rest on the oiled surface. Slide the dual rear wheel assembly off the hub.

5. The bearings are serviced in the same manner as those in the front hubs.

6. Assemble the bearings in the hub,

Wheel Bearing Failure Chart

General Wear

Cause	*Serviceability*
Wear on races and rollers caused by fine abrasives	Clean all parts and check seals. Install new bearing if old one is rough or noisy.

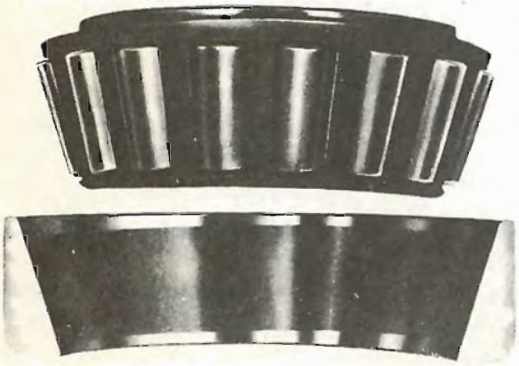

Normal wear pattern. (© Chevrolet Div. G.M. Corp.)

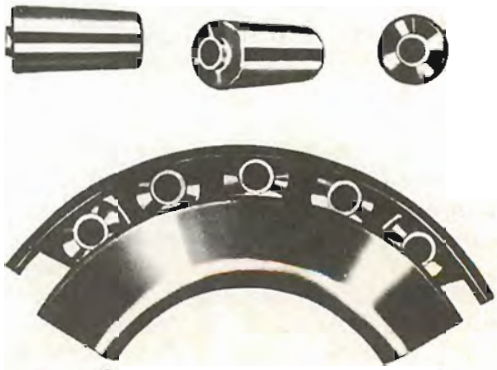

Step wear. (© Chevrolet Div. G.M. Corp.)

Bearing Failure Chart (cont.)

Step Wear

Cause	*Serviceability*
Wear pattern on roller ends caused by fine abrasives	Clean all parts and check seals. Install new bearings if old one is rough or noisy.

Indentations

Cause	*Serviceability*
Surface depressions on races and rollers caused by hard foreign particles	Clean all parts and check seals. Install new bearing if old one is rough or noisy.

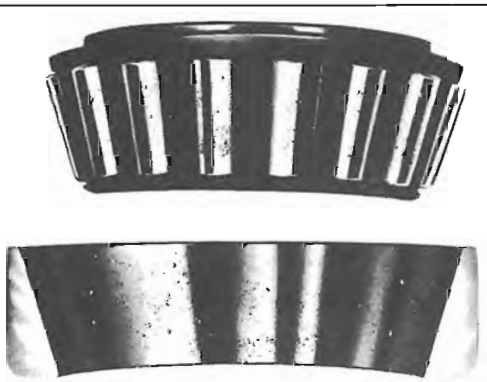

Indentations. (© Chevrolet Div. G.M. Corp.)

Galling. (© Chevrolet Div. G.M. Corp.)

Galling

Cause	*Serviceability*
Metal smears on roller ends due to overheating from improper lubricant or overloading	Install a new bearing. Check seals and use proper lubricant.

Etching

Cause	*Serviceability*
Bearing surfaces appear gray or gray-black with related etching	Install new bearing and check seals. Use proper lubricant.

Etching. (© Chevrolet Div. G.M. Corp.)

Cage wear. (© Chevrolet Div. G.M. Corp.)

Bearing Failure Chart (cont.)

Cage Wear

Cause	*Serviceability*
Wear around outside diameter of cage and rollers caused by foreign material and poor lubrication	Clean all parts, check seals, and install new bearing.

Fatigue Spalling

Cause	*Serviceability*
Flaking of surface metal due to fatigue	Clean all parts and install new bearing.

Fatigue spalling. (© Chevrolet Div. G.M. Corp.)

Heat discoloration. (© Chevrolet Div. G.M. Corp.)

Heat Discoloration

Cause	*Serviceability*
Discoloration from faint yellow to dark blue due to overload or lubricant breakdown. Softening of races or rollers also	Check for softening of parts by drawing a file over suspected area. The file will glide easily over hard metal, but will cut soft metal. If overheating is evident, install new bearings. Check seals and other parts.

Stain Discoloration

Cause	*Serviceability*
Stain discoloration ranging from light brown to black, caused by lubricant breakdown or moisture	Reuse bearings if stains can be removed by light polishing and no overheating exists. Check seals.

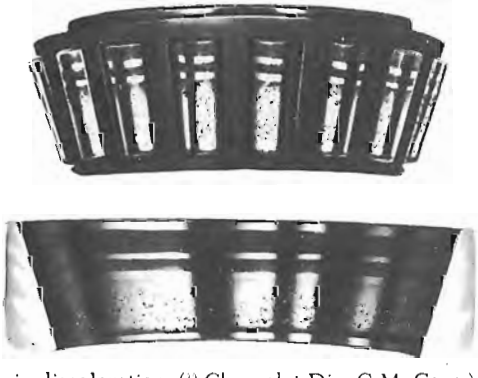

Stain discoloration. (© Chevrolet Div. G.M. Corp.)

Brinelling. (© Chevrolet Div. G.M. Corp.)

Bearing Failure Chart (cont.)

Brinelling

Cause	*Serviceability*
Surface indentations in race caused by rollers under impact load or vibration while the bearing is not rotating	If the old bearing is rough or noisy, install a new bearing.

Bent Cage

Cause	*Serviceability*
Improper handling	Install a new bearing.

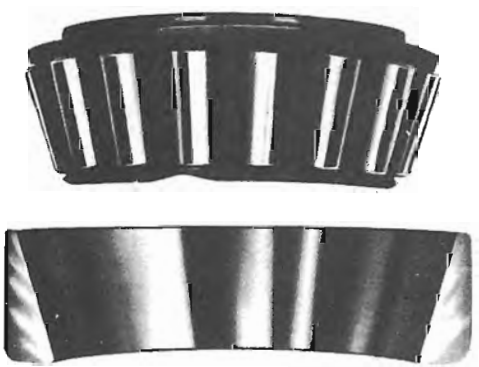

Bent cage. (© Chevrolet Div. G.M. Corp.)

Bent cage. (© Chevrolet Div. G.M. Corp.)

Bent Cage

Cause	*Serviceability*
Improper handling	Install a new bearing.

Misalignment

Cause	*Serviceability*
Outer race misaligned as shown	Install a new bearing and be sure races and bearing are properly seated.

Misalignment. (© Chevrolet Div. G.M. Corp.)

Cracked inner race. (© Chevrolet Div. G.M. Corp.)

Bearing Failure Chart (cont.)

Cracked Inner Race

Cause	*Serviceability*
Crack due to improper fit, cocked bearing, or poor bearing seats	Install a new bearing and be sure it is seated properly.

Frettage

Cause	*Serviceability*
Corrosion due to small movement of parts with no lubrication	Clean parts and check seals. Install a new bearing and be sure of proper lubrication.

Frettage. (© Chevrolet Div. G.M. Corp.)

Smears. (© Chevrolet Div. G.M. Corp.)

Smears

Cause	*Serviceability*
Metal smears due to slippage caused by poor fit, improper lubrication, overloading, or handling damage	Clean parts, install new bearing, and check for proper fit and lubrication.

the hub to the spindle and the axle to the hub in the reverse order of removal, taking note of the following:

7. To adjust the rear wheel bearing to the proper preload, tighten the adjusting nut while rotating the wheel until a slight bind is evident. Back off the adjusting nut 1/6 of a turn so that the wheel will rotate freely without excessive end-play. Install the lockring and jam nut.

NOTE: *Be sure not to turn the adjusting nut when you draw up the locknut against the lockring as the bearing adjustment will be affected.*

8. Clean the flange gasket contact areas on the axle flange and the hub. Install a new flange gasket and slide the axle shaft into the axle housing. You will have to guide the inner end of the axle shaft into the differential spline by feel. Install the tapered dowels, lockwashers and nuts. Tighten 7/16 in. x 20 nuts to 40–70 ft lbs or ½ in. x 20 nuts to 65–105 ft lbs.

Pushing, Towing, and Jump Starting

Jump starting by either pushing or towing the vehicle cannot be accomplished. Use a booster battery or jumper cables

from the battery of another vehicle. Do not use a booster battery, or any other power source with an output which exceeds 12 volts. The negative cable on the booster battery must be attached only to the negative (−) post (or a good ground on the engine), and the positive cable to the positive (+) post. Each post is stamped on top and identified on the battery case. Connecting both batteries in parallel with each other as outlined above will prevent damage to the vehicle's electrical system.

The motor home can be towed forward for short distances with the driveshaft connected as long as it is done below 30 mph and with the transmission in NEUTRAL. If the vehicle has to be towed for more than 15 miles, or if the transmission is not operating properly, disconnect the driveshaft at the rear axle and tie it up, or tow the motor home with the rear end hoisted.

Jacking and Hoisting

It is very important to be careful about running the engine on vehicles equipped with limited slip differentials, while the vehicle is up on a jack. This is because if the drive train is engaged, power is transmitted to the wheel with the best traction and the vehicle will drive itself off the jack, resulting in possible damage or injury.

Before jacking the motor home, seek as level ground as possible and turn off the engine and set the parking brake. Also, block both the front and rear wheel opposite the wheel to be raised. On soft ground use a board or blocks to make sure that the jack has a firm base.

NOTE: *It is possible that you may need a second jack to lift the body up and away from the axle to gain enough clearance to remove the wheel.*

Jack the front of the motor home under the front spring just ahead of the front axle. Jack the rear of the motor home from under the rear axle housing at the spring. Be sure to place jackstands under the axles or frame as a safety precaution.

When raising the vehicle on a hoist, place the adapter pads under the axles or at the longitudinal frame members as close to the axles as possible. Be careful not to touch the shock absorber mounting brackets.

Storage

LESS THAN 30 DAYS

If the vehicle will be inoperative for less than 30 days or will be driven infrequently during this period, do the following:

Coach

The main concern when placing the motor home in storage, no matter for how long, is what lowest environmental temperature is expected. If the temperature is expected to go below freezing, you will have to drain the entire water and sewage system.

1. Open all of the drain valves at the water tank, hot water heater, toilet, the holding tank, and any other place a drain valve might be. Allow all of the water to drain.

2. Close all of the valves and pressurize the system with air. If an outside source of pressurized air is used, be careful not to go above 50 lbs within the system.

Many drain petcocks such as these are located throughout the plumbing system. You should know where they all are

3. Open the drain valve farthest from the water tank and allow the pressure to bleed out. If water is still in the system, repeat the procedure.

4. Open all of the valves and leave them open throughout the storage period.

5. Pour a cup of glycol type antifreeze into the toilet, sink, and shower drains to prevent water from freezing in the traps.

6. Remove the inlet and outlet lines from the water pump and turn the pump by hand to make sure that all water is removed.

Remove any food, cosmetics, or other items from the coach that might be damaged by freezing or might cause damage if their containers break.

Clean the refrigerator and leave the door open.

Chassis

The manufacturer recommends that one quart of special rust preventive oil be added to the fuel tank for every five gallons of gasoline remaining in the tank.

No additional treatment to the chassis will be necessary when the vehicle is returned to storage after having been driven for short distances.

Drain the gasoline from the fuel tank of the auxiliary generator, if applicable.

MORE THAN 30 DAYS

Perform the following steps if the vehicle is to be stored for more than 30 days, but less than 90 days and the engine will not be operated during the storage period:

Coach

Perform all of the steps given for the coach under the "Less Than 30 Days" heading.

Chassis

1. Add one quart of special rust preventive oil to each 5 gallons of gasoline in the fuel tank.

2. Run the engine on this mixture for at least five minutes at an engine speed of 1000 rpm.

3. Drain the fuel tank and continue to operate the engine until the carburetor runs dry. The purpose of this is to prevent the carburetor from becoming contaminated with the gum that usually forms in gasoline after prolonged exposure to oxygen in the atmosphere.

4. Remove the spark plugs and pour two ounces of rust preventive oil into each cylinder through the spark plug hole. Crank the engine over several times with the starter to distribute the oil on the cylinder walls. Replace the spark plugs and tighten them to 30 ft lbs.

5. Remove the valve covers and coat the rocker arms, rocker arm shafts, valve springs, pushrods and valve stems with rust preventive oil. Use a clean paint spray gun with *dry* air for best results.

6. Check the cooling system for leaks and adequate protection for low temperatures likely to be encountered during the storage period.

OVER 90 DAYS

If the vehicle is to be stored for more than 90 days, perform the following procedures:

Coach

Perform the steps given for the coach under the "Less Than 30 Days" heading.

Chassis

There are two ways to protect the chassis during a period of storage lasting over 90 days. The first method is to perform all of the steps given under the "More Than 30 Days" heading and then at least once every 30 days, operate the vehicle at highway speed for at least one hour or more.

The second method is as follows:

1. Perform all of the steps given under the "More Than 30 Days" heading, except Step 6.

2. Drain the cooling system and tag the vehicle accordingly on the steering wheel so that it will not be started until the coolant is replaced.

3. Place the vehicle on blocks or jackstands to take the weight off the tires and suspension components. Inflate the tires to the recommended pressure. The tires then can remain on the vehicle or be removed and stored in a cool, dry place away from any electric motors which are operated frequently. Ozone gas, which is a product of electrolysis, decomposes rubber compounds. Clean all oil and grease from the tires and remove any

foreign objects that may be embedded in the tread. Make sure that all of the valve caps are in place.

4. Disconnect the battery cables and coat the cable terminals and the battery posts with light grease. Remove the battery from the vehicle. Do not store the battery on the ground or a concrete basement floor. Instead, place it on wood blocks or a work bench so that the battery does not establish a ground and drain itself of all electrical power. A battery is capable of establishing a ground through its casing. If a battery is allowed to go completely dead, it will not accept a charge and will not return to its original power rating. The battery should be charged at intervals throughout the storage period to insure a full charge when it is placed back in service. You need not worry about the battery freezing unless extreme cold is expected since a fully charged new battery with a specific gravity of 1275–1290 will not freeze until −90°F. The average in-service battery with a specific gravity of 1200–1250 will not be affected until −20°F. A dead battery (specific gravity 1100) will freeze at +15°F.

Safety Check

Not every owner of a motor home has the immediate ability to spot every problem that could arise with the vehicle. This ability, however, can be cultivated. What you have to do is become familiar with the various systems and the way your motor home looks, handles, sounds, and operates under various conditions so that you will be able to detect any abnormality and act accordingly before serious damage occurs. In order to achieve the necessary familiarization, you must inspect the vehicle regularly. Thus, a pre-operation inspection of the motor home is a good habit to get into. The following check list below is offered as an inspection guideline, which you can build upon as necessary. You should establish a definite sequence of inspection to avoid missing an important check. Check the vehicle before you leave on your trip and each morning, before the day's run, thereafter.

OUTSIDE WALK-AROUND INSPECTION

Tires and Wheels

Check the tires for excessive wear, nails, cuts and sidewall damage. Abnormal wear patterns on the tread indicates misalignment. Check the tire pressures with your own accurate tire gauge rather than rely on those sometimes inaccurate service station gauges used as part of the air line. Make sure that the wheel nuts are tight and the wheels themselves are not bent or cracked. Look for cracks around the wheel nut holes and any welded joints.

Glass and Mirrors

Check for broken, scratched, dirty or otherwise damaged glass that could cause injury or obscure your vision. Make sure that all of your mirrors are aimed properly for you and are clean. Check to see that they are securely mounted and adjusted.

Lights

Check the aim of the headlights. Check all the other exterior lights front and rear: parking lights, turn signals, four-way flashers, marker lights (don't forget the side marker lights), license plate lights, taillights, brake lights, and back-up lights. Have someone operate the controls while you observe their operation. Clean off all dirty lenses.

Windshield and Windshield Wipers

Check if the windshield is clean. Remove any accumulation of dirt, road oil and bugs. Make sure that the wipers operate along with the washers. Also check and make sure that the wiper blades are in good shape and securely mounted within the wiper arms.

Engine Compartment

With the engine off, open the engine cover or front access hood and check the following:

Check the fluid level in each cell of the battery. The electrolyte should not be below the split ring in the filler hole.

See if there is a sufficient amount of windshield washer solution in the reservoir. Add to it as necessary.

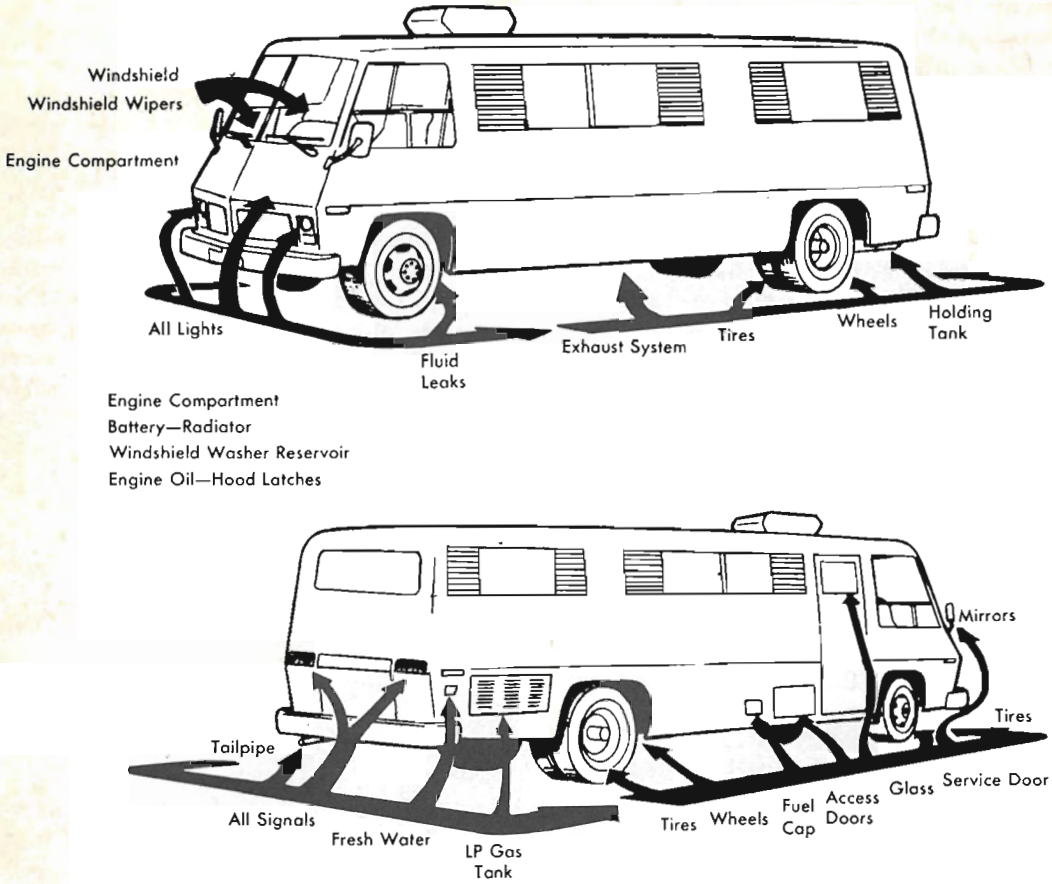

Outside walk-around inspection (© Chevrolet Div. G.M. Corp.)

Check the engine oil level.

Check the level of the coolant in the radiator.

Check for fluid leaks: fuel, water, oil, brake fluid, power steering fluid, and air conditioning refrigerant. Check fluid lines and hose connection points. If you smell gasoline fumes or notice any other fluid leaks, the cause should be determined and corrected without delay.

When you close the engine cover or hood, make sure that it closes firmly. Lift up on the hood to make sure that it's secure after closing.

While you are standing at the front of the vehicle, bend down and check for brake fluid leaks on the inside of the front wheels. If you see fluid running down the side of the tires, it is advised that you not drive the vehicle any further, but call for assistance.

Exhaust System

Check the exhaust system before you begin your trip. Check the entire exhaust system and nearby body areas for broken, damaged, missing or mispositioned parts, open seams, holes, loose connections or other damage or deterioration which could permit exhaust fumes to enter the passenger compartment. Dust or water present in the passenger compartment may be an indication of a problem in one of these areas. Any defects you find should be corrected immediately. Any resonators and pipes behind the muffler should be replaced when the muffler is replaced to protect and insure the continued integrity of the system.

Holding Tank

Drain and flush the holding tank. Traveling with material in the holding tank means that you are hauling extra weight.

Fresh Water Tank

If you are going to travel through an area where the quality of the water is doubtful, fill the water tank at a source known to be of good quality. Otherwise

travel with enough water in the tank to take care of the day's traveling needs and no more. At the end of the day you can fill the tank with enough water to supply you through the time you remain parked. The less water in the tank, the less weight you haul.

LP Gas

Before you leave on your trip, turn on the LP gas supply. Do not activate any of the gas appliances. Inspect the entire system, sniffing as you go. If you detect a strong order of gas, apply a solution of soap and water to all the joints in the area of the suspected leak. A leak will produce bubbles.

NOTE: *Never, under any circumstances, use a match to try and detect a leak.*

It is advised that you travel with the LPG system turned off at the tank. This is a safety precaution. In some states it is mandatory.

Fuel Cap, Lines and Tank

Inspect the fuel tank filler cap. Be certain that it seals properly. Make sure that it is securely fastened. Check the tank and lines for leaks and damage which could cause leaks.

Suspension

Stand away from the vehicle after it has been loaded and check the overall posture. Leaning to one side may indicate broken springs.

Access Doors

Check all access doors, filler openings, the sewer connection and the spare tire compartment and make sure that they are all properly stowed, closed and locked.

Any items stored on the exterior of the motor home should be securely fastened and should not obstruct vision, vents, or hinder clearance.

INSIDE INSPECTION

After you have checked the outside of the motor home, thoroughly inspect the inside.

Lock the entrance door from the inside, and check to make certain that it is fully closed and secured so that it can't open while under way. All doors inside the vehicle should be closed and secured properly. This includes the refrigerator door. Check to make sure that all of the dome hatches are closed and securely latched. Heavy items such as canned goods, pots and pans, etc., should be stored down low in cabinets below waist level. Heavy objects stored in high cabinets present a hazard in that they could force the cabinet doors open during a sudden stop or hard cornering.

Driver's Seat and Safety Belts

Adjust the seat so that you can easily and comfortably reach all of the pedals and controls. You must be able to operate them through their full travel. Adjust the mirrors to suit your average driving position.

Check the condition of the safety belts and insure that they are securely anchored. Adjust them to suit your frame while sitting up straight in the driver's seat. They should be snug but not tight, and above all, not hanging loose.

Instruments and Controls

Operate the horn to make sure that it works.

Check the operation of the windshield wipers and washers. Notice the direction of the stream of washer solvent and the amount.

Make sure that the automatic transmission shift selector accurately indicates the gear position selected.

Check the neutral start switch by placing the transmission selector in each of the drive ranges (including Reverse) and trying to start the engine.

CAUTION: *Before trying to start the engine, make sure that there is sufficient clear space in front of and behind the vehicle. Apply the parking brake, foot brakes and do not press down on the accelerator. Be prepared to turn off the ignition switch immediately if the engine should try to start.*

The starter should only operate in the Park or Neutral positions.

While the engine is running, the ammeter should show a positive reading. The needle should be pointing just to the Charge side of center after a few minutes of operation without any accessories or lights on.

The temperature gauge should read somewhere between the Hot and Cold marks. The gauge will only start to register after the engine warms up after sev-

eral minutes of operation. If the indicator needle ever reaches the extreme Hot end of the gauge, the engine should be shut off immediately and the problem investigated and corrected. Conversely, if the temperature gauge needle never gets off the cold position or indicates the engine temperature is not getting as hot as normal, this condition should be corrected.

The oil pressure gauge should give a reading as soon as the engine is started, and should remain around the center of the gauge. If it doesn't perform in this manner, shut the engine off and investigate.

The fuel gauge should indicate the fuel level in the tank. Failure to do so when the ignition switch is turned to the On position indicates trouble with the gauge, sending unit, or the connections in between.

Dodge motor home chassis are equipped with a dual braking system. If a leak occurs in either system, a warning light on the dash glows continually when the engine is running. If the light continues to glow after the brake pedal has been pressed down firmly, a malfunction in one half of the braking system is implied. As a check on the condition of the bulb, the light should glow during the starting of the engine. The brake system warning light should not be used as a substitute for visually inspecting the level of brake fluid in the master cylinder.

Open the engine compartment cover and check the condition and tension of the drive belts. Also check the level of the automatic transmission fluid.

ROAD INSPECTION

No matter how closely you inspect your motor home before you start out on a trip, there are defects that will not make themselves known until the vehicle is driven. Here are a few hints on what to look for:

When you press on the brake pedal, the vehicle should stop in a straight line without swerving or pulling to one side. The brakes should not grab, lock, or make excessive noise. You should take note of any change in brake pedal pressure or any unusual behavior. If the brake warning light should come on while you are cruising down the highway, pull off the road at the next safe spot remembering that it might take you a longer distance to completely stop, greater pedal effort may be required, and the pedal travel may be greater. Try out the brakes before starting again. If you deem them acceptable, continue on to the nearest service area for repairs; otherwise, have the vehicle towed to a service area.

While driving along, be alert for any unusual noises, vibrations, or lack of normal response from the engine. Be sure to have any abnormalities looked after. Remember never to race the engine immediately after starting or while it is still cold. Give the oil a chance to sufficiently lubricate all the moving parts.

With the transmission engaged, the motor home should start out smoothly when you depress the accelerator pedal. Any unusual noises or abnormal shifting should be investigated as soon as possible.

Observe the ease and responsiveness of the power steering. A jerking sensation usually indicates a loose power steering belt. Be aware of any excessive play when going around turns and over bumps.

While driving, stay alert for any excessive sag or bouncing and bottoming when going over bumps or in and out of driveways. This could indicate broken springs or faulty shock absorbers. Also you should be able to quickly sense the thumping of a flat or underinflated tire and any other abnormal noise or handling characteristics.

2 · Tune-Up and Troubleshooting

Tune-Up Specifications

Year	Engine No. Cyl Displacement (cu in.)	Type of Spark Plugs ②	Distributor Point Dwell (deg)	Distributor Point Gap (in.)	Ignition Timing (deg)	Intake Valve Opens (deg)	Fuel Pump Pressure (psi)	Compression Pressure (psi)	Idle Speed/ Auto Trans
1968–1972	8-318	F-10	33	0.017	5B	10	5–7	110	600①
	8-413	N-6	30	0.016	5B	12	7–8.5	130	500
1973	8-318	F-10	Electronic		3B	10	5–7	110	700
	8-413	N-6	Electronic		5B	12	7–8.5	130	500
	8-440	BL-9Y	Electronic		8B	18	6–7.5	130	750
1974	8-318 8-413 8-440	See engine decal for tune-up specifications							

① 700 rpm in 1972
② For all years, the spark plug gap is 0.035 in.

Electronic—Electronic Ignition System
B—Before Top Dead Center (BTDC)

Tune-Up Procedures

SPARK PLUGS

Spark plugs ignite the air-fuel mixture in the cylinder as the piston reaches the top of the compression stroke. The controlled explosion which results forces the piston down, turning the crankshaft and the rest of the drive train.

The average life of a spark plug is 12,000 miles. This is, however, dependent on a number of factors: the mechanical condition of the engine; the type of fuel; driving conditions; and the driver of the vehicle.

When you remove the spark plugs, check their condition. They are a good indicator of the condition of the engine. It is a good idea to remove the spark plugs at regular intervals such as every 3,000 or

4,000 miles, so that you can keep an eye on the mechanical state of your engine.

A small deposit of light tan or gray material on a spark plug that has been used for any length of time is considered normal. Any other color, or abnormal amount of deposits, indicate that there is something amiss in the engine.

The gap between the center electrode and the side or ground electrode can be expected to increase not more than 0.001 in. every 1,000 miles under normal conditions.

When a spark plug is functioning normally, or more accurately, when the plug is installed in an engine that is functioning properly, the plugs can be taken out, cleaned, regapped, and reinstalled without doing the engine any harm.

When, and if, a plug fouls and begins to misfire, you will have to investigate, correct the cause of the fouling, and either clean or replace the plug.

There are several reasons why a spark plug will foul and you can learn which is at fault by just looking at the plug. A few of the most common reasons for plug fouling, and a description of the fouled plug's appearance, is listed in the "Troubleshooting" Section, which also offers solutions to the problems.

DISTRIBUTOR WIRING SEQUENCE AND FIRING ORDERS

Removal

Due to the construction of the coach on the chassis, it is easier to remove and install the spark plugs from under the vehicle. Remove the engine cover to provide the maximum amount of light in the area. Also, you should have a drop light to further assist you in seeing what you are doing. An access plate will have to be removed to gain access to the spark plugs on the left-side.

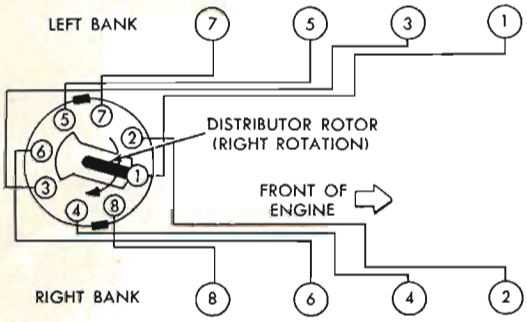

Firing order for the 413 and 440 V8s

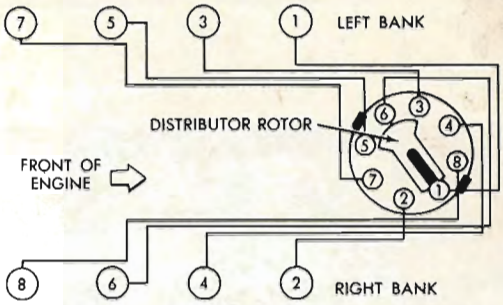

Firing order for the 318 V8

1. Number the wires so that you won't cross them when you replace them.

2. Remove the wire from the end of the spark plug by grasping the wire by the rubber boot. If the boot sticks to the plug, remove it by twisting and pulling at the same time. Do not pull the wire itself or you will most certainly damage the delicate carbon core.

3. Use a 13/16 in. spark plug socket to loosen all of the plugs about two turns.

4. If compressed air is available, blow off the area around the spark plug holes. Otherwise, use a rag or a brush to clean the area. Be careful not to allow any foreign material to drop into the spark plug holes.

5. Remove the plugs by unscrewing them the rest of the way out of the engine.

Inspection

Check the plugs for deposits and wear. If they are going to be reinstalled, clean the plugs thoroughly. Remember that any kind of deposit will decrease the efficiency of the plug. Plugs can be cleaned on a spark plug cleaning machine, which can be found in service stations, or you can do an acceptable job of cleaning with a stiff brush.

Check the gap of the spark plugs before installing them. The ground electrode must be parallel to the center electrode and the specified size wire gauge should pass through the gap with a slight drag. If the electrodes are worn, it is possible to file them level.

Installation

1. Insert the plugs in the spark plug holes and tighten them hand-tight. Take care not to cross-thread them.

The spark plugs must be reached from under the vehicle

2. Tighten the plugs to the torque specified in the "Tune-Up" Section at the end of this Chapter.

3. Install the spark plug wires on their plugs. Make sure that each wire is firmly connected to each plug.

BREAKER POINTS

The points function as a circuit breaker for the primary circuit of the ignition system. The ignition coil must boost the 12 volts of electrical pressure supplied by the battery to as much as 25,000 volts in order to fire the spark plugs. To do this, the coil depends on the points and the condenser to make a clean break in the primary circuit.

The coil has both primary and secondary circuits. When the ignition is turned on, the battery supplies voltage through the coil and on to the points. The points are grounded to the engine, completing the primary circuit. As the current passes through the coil, a magnetic field is created in the iron center core of the coil. As the cam in the distributor turns, the points open and the primary circuit is interrupted. The magnetic field in the primary circuit of the coil collapses and cuts through the secondary circuit windings around the iron core. Because of the scientific phenomenon called "electromagnetic induction," the battery voltage is increased to a level sufficient to fire the spark plugs.

When the points open, the electrical charge in the primary circuit jumps the gap created between the two open contacts of the points. If this electrical charge were not transferred elsewhere, the metal contacts of the points would melt and the gap between the points would start to change rapidly. If this gap is not maintained, the points will not break the primary circuit. If the primary circuit is not broken, the secondary circuit will not have enough voltage to fire the spark plugs.

The function of the condenser is to absorb excessive voltage from the points when they open and thus prevent the points from becoming pitted or burned.

It is interesting to note that the above cycle must be completed by the ignition system every time a spark plug fires. In a V8 engine, all of the spark plugs fire once for every two revolutions of the crankshaft. That means that in one revolution, four spark plugs fire. So, when the engine is at an idle speed of 800 rpm, the points are opening and closing 3,200 times a minute. Just think how many times they are opening and closing at 60 mph!

There are two ways to check the

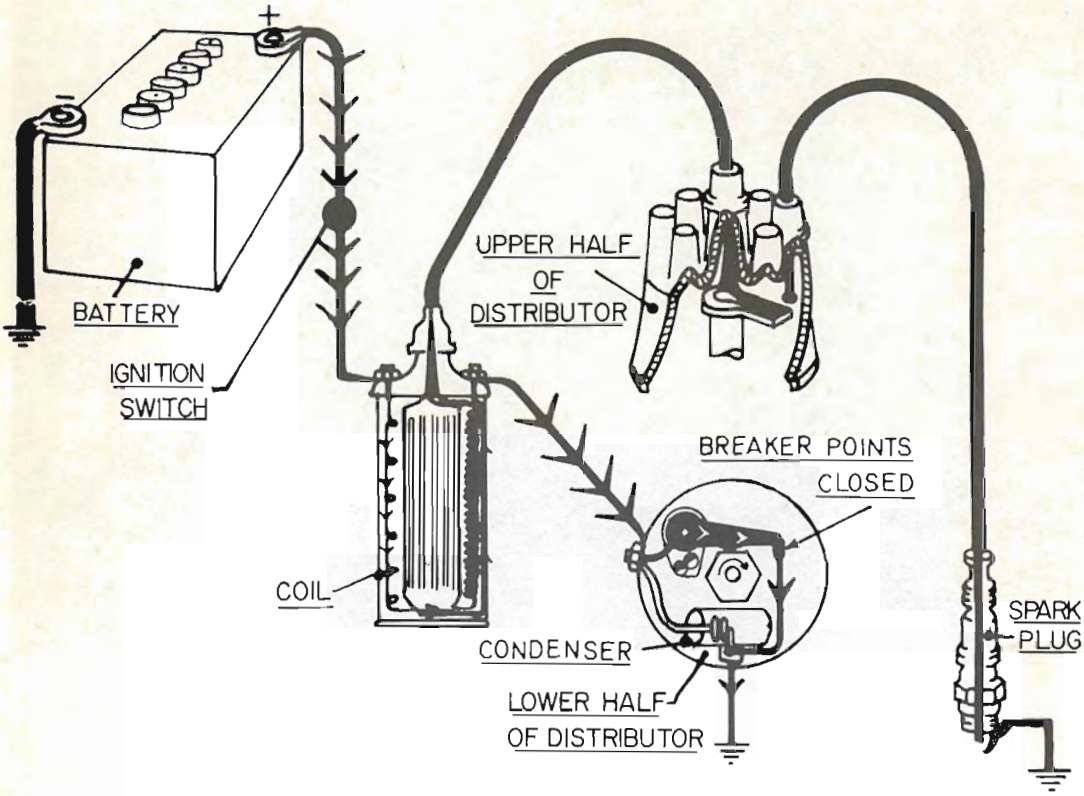

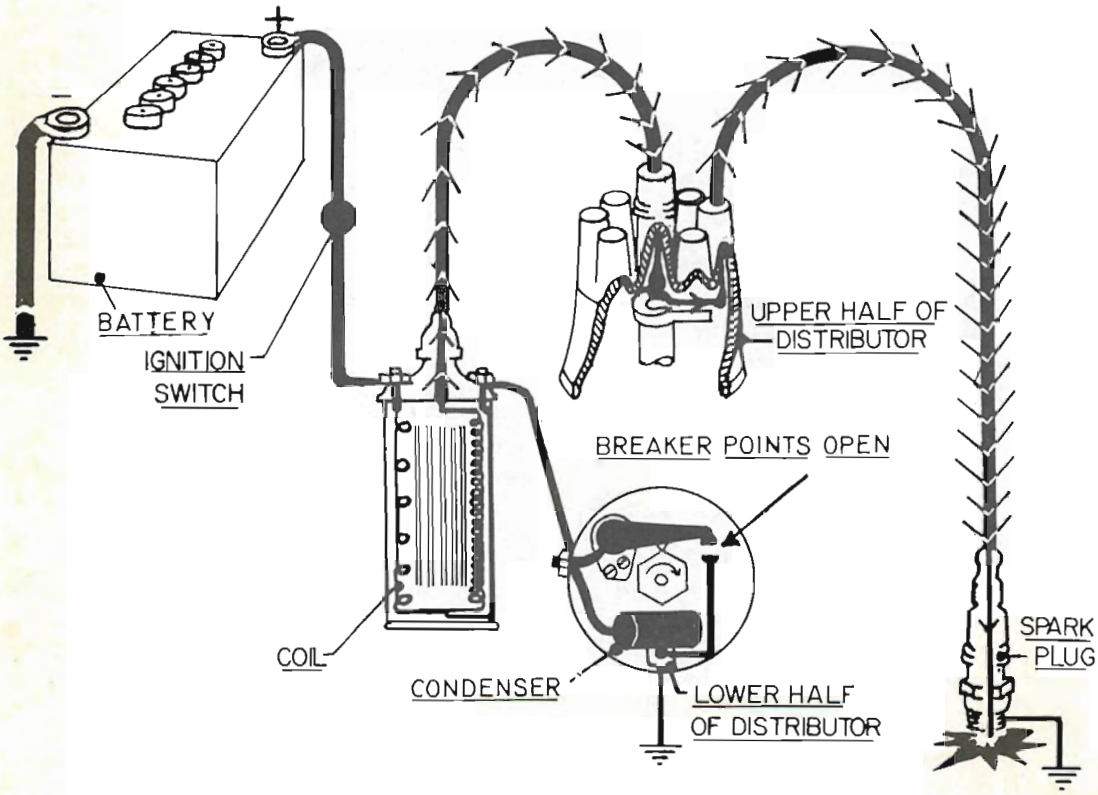

Top, diagram of the primary ignition circuit; *Bottom*, diagram of the secondary ignition circuit

breaker point gap: It can be done with a feeler gauge or a dwell meter. Either way you set the points; you are basically adjusting the amount of time that the points remain open. The time is measured in degrees of distributor rotation. When you measure the gap between the breaker points with a feeler gauge, you are setting the maximum amount to which the points will open when the rubbing block on the points is on a high point of the distributor cam. When you adjust the points with a dwell meter, you are adjusting the number of degrees in which the points will remain closed before they start to open as a high point of the distributor cam approaches the rubbing block of the points.

When you replace a set of points, always replace the condenser at the same time.

When you change the point gap or dwell, you will also have changed the ignition timing. So, if the point gap or dwell is changed, the ignition timing must be adjusted also. A change of point gap or dwell affects timing; but a change of ignition timing does not affect the gap or dwell of the points.

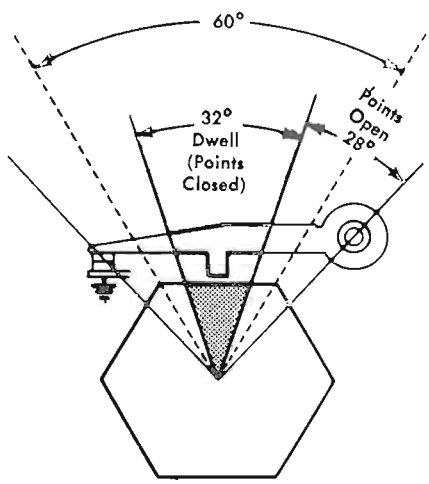

Diagram of point dwell

Inspection of the Points

1. Remove the engine compartment cover and disconnect the high-tension wire from the top of the distributor and the coil.

2. Remove the distributor cap by prying off the spring clips on the sides of the cap.

3. Remove the rotor from the distributor shaft by pulling it straight up. Examine the condition of the rotor. If it is cracked or the metal tip is excessively worn or burned, it should be replaced.

4. Pry open the contacts of the points with a screwdriver and check the condition of the contacts. If they are excessively worn, burned or pitted, they should be replaced.

5. If the points are in good condition, adjust them and replace the rotor and the distributor cap. If the points need to be replaced, follow the replacement procedure given below.

Breaker point contact material transfer

Replacement of the Breaker Points and Condenser

1. Remove the coil high-tension wire from top of the distributor cap. Remove the distributor cap from the distributor and place it out of the way. Remove the rotor from the distributor shaft.

2. Loosen the screw which holds the condenser lead to the body of the breaker points and remove the condenser lead from the points.

3. Remove the screw which holds and grounds the condenser to the distributor body. Remove the condenser from the distributor and discard it.

4. Remove the points assembly attaching screws and adjustment lockscrews. A screwdriver with a holding mechanism will come in handy here, so that you don't drop a screw into the distributor and have to remove the entire distributor to retrieve it.

5. Remove the points by lifting them straight up and off the locating dowel on the plate. Wipe off the cam and apply new cam lubricant. Discard the old set of points.

6. Slip the new set of points onto the locating dowel and install the screws

which hold the assembly onto the plate. Do not tighten them all the way.

7. Attach the new condenser to the plate with the ground screw.

8. Attach the condenser lead to the points at the proper place.

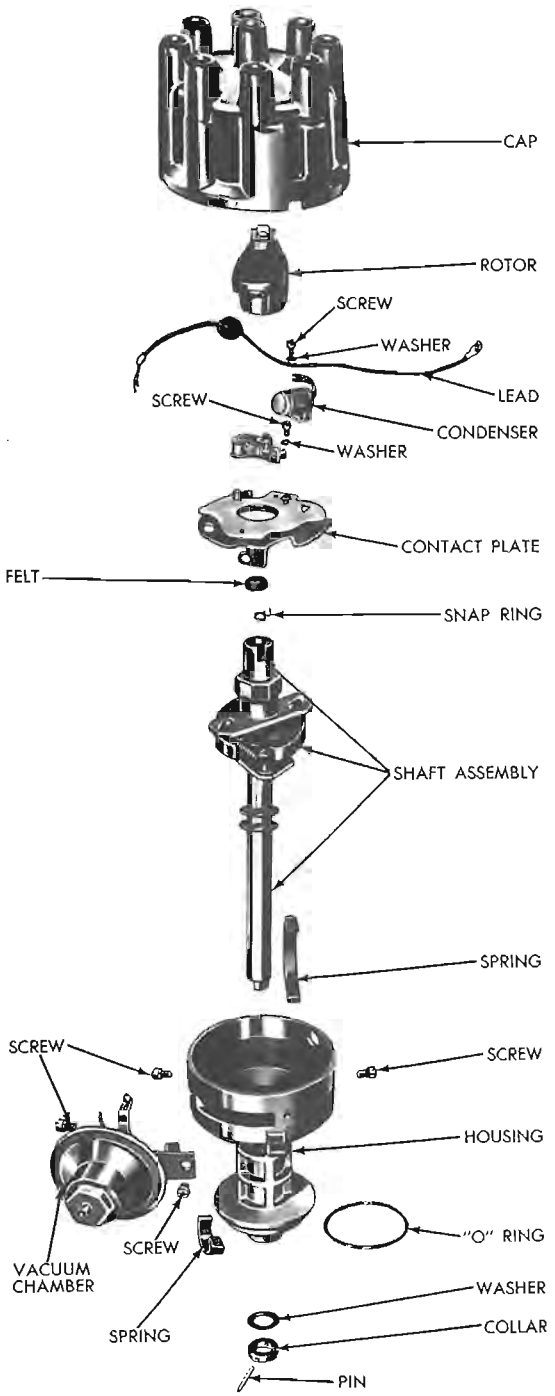

An exploded view of the distributor used in all non-electronic ignition 318, 413, and 440 V8s

9. Apply a small amount of cam lubricant to the shaft where the rubbing block of the points touches.

Adjustment of the Breaker Points with a Feeler Gauge

1. If the contact points of the assembly are not parallel, bend the stationary contact so that they make contact across the entire surface of the contacts. Bend only the stationary bracket part of the point assembly; not the moveable contact.

2. Turn the engine until the rubbing block of the points is on one of the high points of the distributor cam. You can do this by either turning the ignition switch to the start position and releasing it quickly ("bumping" the engine) or by using a wrench on the bolt which holds the crankshaft pulley to the crankshaft.

3. Place the correct size feeler gauge between the contacts. Make sure that it is parallel with the contact surfaces.

4. With your free hand, insert a screwdriver into the notch provided for adjustment or into the eccentric adjusting screw, then twist the screwdriver to either increase or decrease the gap to the proper setting.

5. Tighten the adjustment lockscrew and recheck the contact gap to make sure that it didn't change when the lockscrew was tightened.

6. Replace the rotor and distributor cap, and the high-tension wire which connects the top of the distributor and the coil. Make sure that the rotor is firmly seated all the way onto the distributor shaft and that the tab of the rotor is aligned with notch in the shaft. Align the tab in the base of the distributor cap with the notch in the distributor body. Make sure that the cap is firmly seated on the distributor and that the retainer springs are in place. Make sure that the end of the high-tension wire is firmly placed in the top of the distributor and the coil.

Adjustment of the Breaker Points with a Dwell Meter

1. Adjust the points with a feeler gauge as previously described.

2. Connect the dwell meter to the ignition circuit as according to the manufacturer's instructions. One lead of the meter is connected to a ground and the other lead is connected to the distributor

post on the coil. An adapter is usually provided for this purpose.

3. If the dwell meter has a set line on it, adjust the meter to zero the indicator.

4. Start the engine.

NOTE: *Be careful when working on any vehicle while the engine is running. Make sure that the transmission is in Park and that the parking brake is applied. Keep hands, clothing, tools and the wires of the test instruments clear of the rotating fan blades.*

5. Observe the reading on the dwell meter. If the reading is within the specified range, turn off the engine and remove the dwell meter.

6. If the reading is above the specified range, the breaker point gap is too small. If the reading is below the specified range, the gap is too large. In either case, the engine must be stopped and the gap adjusted in the manner previously covered.

After making the adjustment, start the engine and check the reading on the dwell meter. When the correct reading is obtained, disconnect the dwell meter.

7. Check the adjustment of the ignition timing.

IGNITION TIMING

Ignition timing is the measurement, in degrees of crankshaft rotation, of the point at which the spark plugs fire in each of the cylinders. It is measured in degrees before or after Top Dead Center (TDC) of the compression stroke. Ignition timing is controlled by turning the distributor body in the engine.

Ideally, the air/fuel mixture in the cylinder will be ignited by the spark plug just as the piston passes TDC of the compression stroke. If this happens, the piston will be beginning its downward motion of the power stroke just as the compressed and ignited air/fuel mixture starts to expand. The expansion of the air/fuel mixture then forces the piston down on the power stroke and turns the crankshaft.

Because it takes a fraction of a second for the spark plug to ignite the mixture in the cylinder, the spark plug must fire a little before the piston reaches TDC. Otherwise, the mixture will not be completely ignited as the piston passes TDC and the full power of the explosion will not be used by the engine.

The timing measurement is given in degrees of crankshaft rotation before the piston reaches TDC (BTDC). If the setting for the ignition timing is 5° BTDC, the spark plugs must fire 5° before each piston reaches TDC. This only holds true, however, when the engine is at idle speed.

As the engine speed increases, the pistons go faster. The spark plugs have to ignite the mixture even sooner if it is to be completely ignited when the piston reaches TDC. To do this, the distributor has a means to advance the timing of the

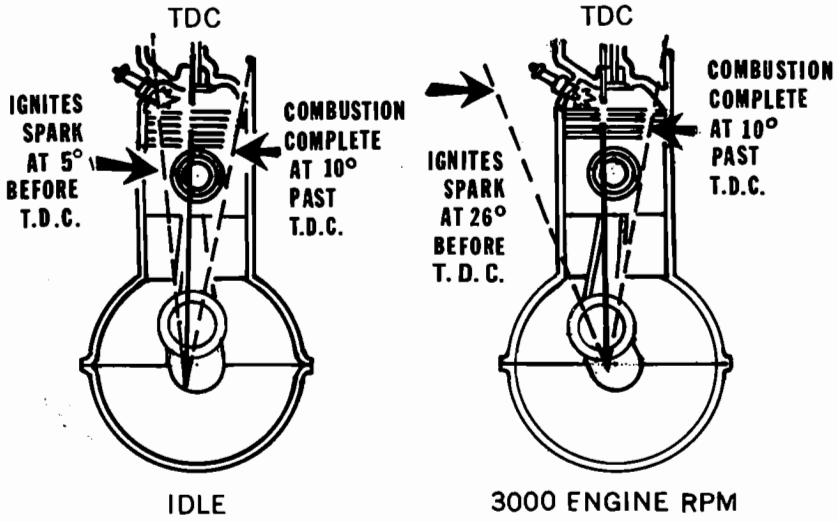

Diagram of ignition spark timing at idle and at operating speed of 3000 rpm

spark as the engine speed increases. This is accomplished by centrifugal weights within the distributor and a vacuum diaphragm, mounted on the side of the distributor. It is necessary to disconnect the vacuum line from the diaphragm when the ignition timing is being set.

If the ignition is set too far advanced, before TDC (BTDC), the ignition and expansion of the mixture in the cylinder will occur too soon and tend to force the piston down while it is still traveling up. This causes engine ping. If the ignition spark is set too far retarded, after TDC (ATDC), the piston will have already passed TDC and started on its way down when the mixture is ignited. This will cause the piston to be forced down for only a portion of its travel. This will result in poor engine performance and lack of power.

The timing is best checked with a timing light. This device is connected in series with the No. 1 spark plug. The current which fires the spark plug also causes the timing light to flash.

On all of the engines installed in Dodge chassis, there is a timing mark on the crankshaft vibration damper on the front of the engine and a scale of degrees on the timing chain/gear case cover. On the 318 V8 the scale is located on the left-side and on the 413 and 440 V8s the scale is located on the right-side (passenger side).

On all 1974 chassis with 318 and 440 V8s timing mark settings are located on the transmission case along with an access hole to view the marks on the torque converter.

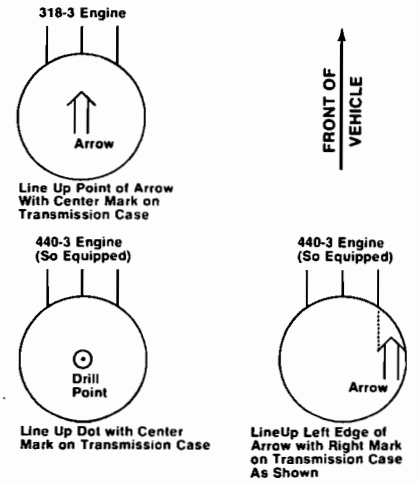

The timing marks on 1974 models equipped with 318 and 440 V8s

When the engine is running, the timing light is aimed at the marks on the engine and crankshaft pulley, or in the case of 1974 models, at the marks as viewed through the access hole in the transmission case.

Ignition Timing Adjustment

1. Remove the engine cover and locate the timing marks on the crankshaft vibration damper and timing chain cover.
2. Clean off the timing marks, so that you can see them.
3. Use chalk or white paint to color the marks on the damper and the proper graduation on the scale which will indicate the correct timing when both marks are aligned.
4. Attach a tachometer to the engine.
5. Attach a timing light to the engine, according to the manufacturer's instructions. If the timing light has 3 wires, one, usually green or blue, is attached to the No. 1 spark plug with an adapter. The other wires are connected to the battery. The red wire goes to the positive side of the battery and the black wire is connected to the negative terminal of the battery.
6. Disconnect the vacuum line to the distributor at the distributor and plug the vacuum line. A golf tee does a fine job.
7. Check to make sure that all of the wires clear the fan and then start the engine.
8. Adjust the idle to the correct setting.
9. Aim the timing light at the timing marks. If the marks which you put on the pulley and the engine are aligned when the light flashes, the timing is correct. Turn off the engine and remove the tachometer and the timing light. If the marks are not in alignment, proceed with the following steps.
10. Turn off the engine.
11. Loosen the distributor lockbolt just enough so that the distributor can be turned with a little effort.
12. Start the engine. Keep the wires of the timing light clear of the fan.
13. With the timing light aimed at the pulley and the marks on the engine, turn the distributor in the direction of rotor ro-

tation to retard the spark, and in the opposite direction of rotor rotation to advance the spark. Align the marks on the pulley and the engine with the flashes of the timing light.

14. When the marks are aligned, tighten the distributor lockbolt and recheck the timing with the timing light to make sure that the distributor did not move when you tightened the lockbolt.

15. Turn off the engine and remove the timing light.

CARBURETOR

This Section contains only tune-up adjustment procedures for carburetors. Descriptions, adjustments, and overhaul procedures for carburetors can be found in the "Fuel System" Section of Chapter 4.

When the engine in your Winnebago is running, the air-fuel mixture from the carburetor is being drawn into the engine by a partial vacuum which is created by the movement of the pistons downward on the intake stroke. The amount of air-fuel mixture that enters into the engine is controlled by the throttle plate(s) in the bottom of the carburetor. When the engine is not running the throttle plate(s) is closed, completely blocking off the bottom of the carburetor from the inside of the engine. The throttle plates are connected by the throttle linkage to the accelerator pedal in the passenger compartment. When you depress the pedal, you open the throttle plates in the carburetor to admit more air-fuel mixture to the engine.

When the engine is not running, the throttle plates are closed. When the engine is idling, it is necessary to have the throttle plates open slightly. To prevent having to hold your foot on the pedal when the engine is idling, an idle speed adjusting screw was added to the carburetor linkage.

The idle adjusting screw contacts a lever (throttle lever) on the outside of the carburetor. When the screw is turned, it either opens or closes the throttle plates of the carburetor, raising or lowering the idle speed of the engine. This screw is called the curb idle adjusting screw.

Curb Idle Speed Adjustment

1. Start the engine and run it until it reaches operating temperature.

2. If it hasn't already been done, check and adjust the ignition timing. After you have checked the timing, turn off the engine.

3. Attach a tachometer to the engine.

4. With the air cleaner in place, air conditioning off, the automatic transmission in Neutral, and the parking brake set, start the engine and check the idle speed on the tachometer.

5. If the reading on the tachometer is correct, turn off the engine and remove

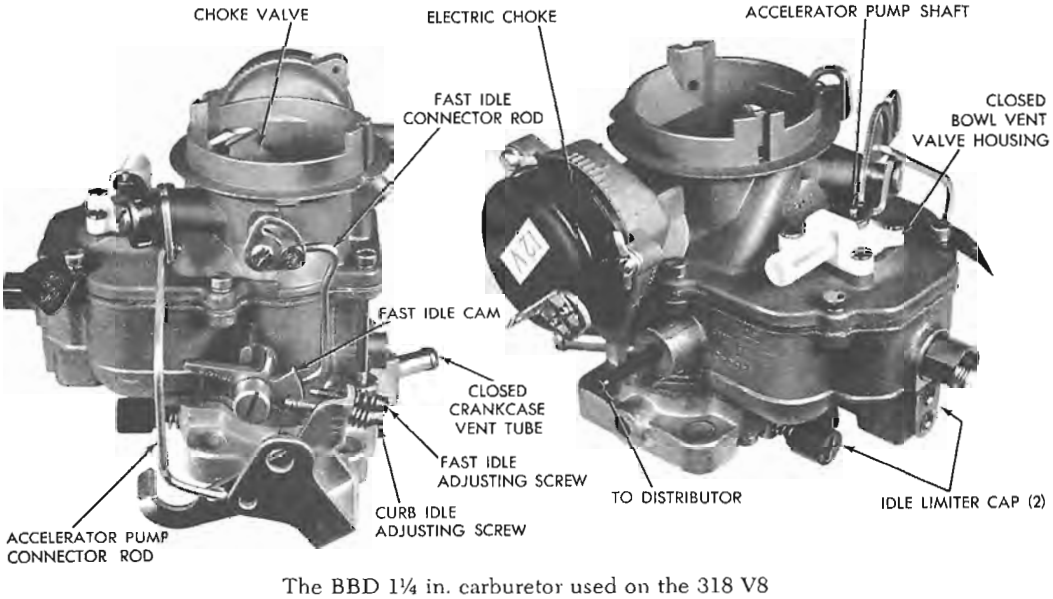

The BBD 1¼ in. carburetor used on the 318 V8

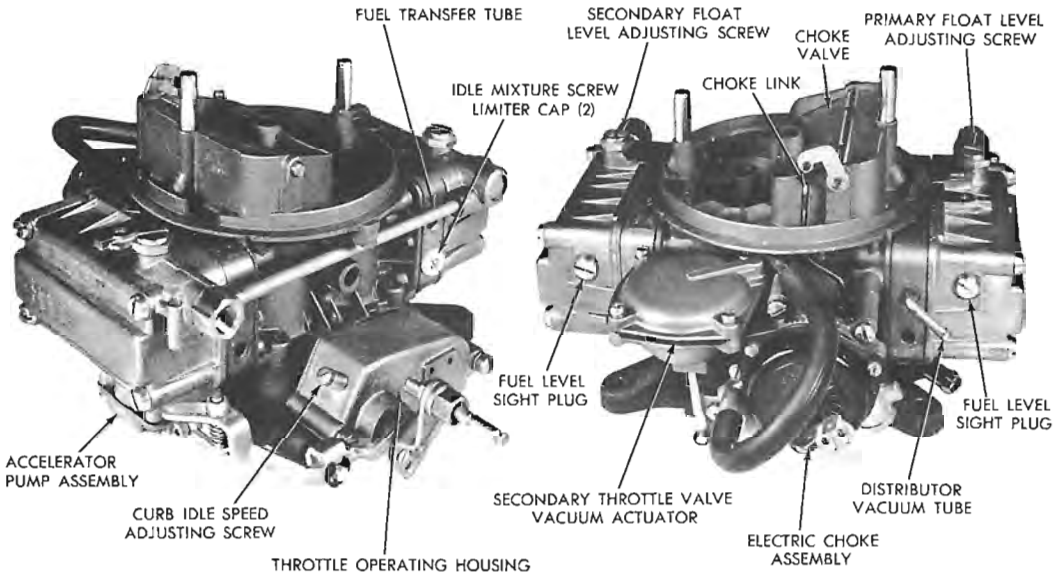

The Holley model series 4150C carburetor used on 413 V8s

the tachometer. If it is not correct, proceed to the following Step.

6. Turn the curb idle adjusting screw on the throttle shaft lever of the carburetor with a screwdriver—clockwise to increase the idle speed, and counterclockwise to decrease it.

Mixture Adjustment

There are two ways in which the carburetor idle mixture adjustment can be made; with an exhaust gas analyzer and without one.

Since the institution and enforcement of Federal antipollution standards and the resulting exhaust emission control equipment installed on automotive engines, one of the steps taken was to install limiter caps on the idle mixture adjustment screws. These limiter caps allow the adjustment screw to be turned only approximately one turn in either direction and no more. By preventing the adjusting screws from turning more than one turn, the limiter caps guard against an incorrect mixture adjustment being made.

With an Exhaust Gas Analyzer

1. Check, and as necessary, adjust the curb idle speed as outlined above. Keep the tachometer connected to the engine.

2. Insert the probe of the exhaust gas analyzer in the tailpipe as far as possible. The probe must be inserted at least 2 ft. On vehicles equipped with dual exhausts, insert the probe in the left-side tailpipe, which is the side opposite the heat valve. If a garage exhaust system is used to conduct the exhaust gases out of the building, a plenum chamber must be used to reduce the vacuum of the exhaust system to ½ in. of water column or less.

3. Connect the analyzer, warm it up and calibrate it according to the manufacturer's instructions.

4. Adjust each screw 1/16 of a turn richer (counterclockwise) and wait 30 seconds before reading the meter.

NOTE: *When adjusting the mixture screws to obtain the air/fuel ratio specified for that particular engine/transmission combination, do not turn the mixture screw more than 1/16 of a turn at a time. The exhaust gas analyzer is so sensitive that the ratio must be changed by very small increments if accurate readings are to be obtained. The meters read in air/fuel ratio so that a higher reading indicates a leaner mixture.*

5. As necessary, repeat Step 4 until the meter indicates a definite increase in richness (lower reading). This step is very important because the meter reverses its readings and indicates a richer mixture as the carburetor is leaned out if the carburetor is set too lean.

6. When it has been determined that the meter is indicating a lower reading (richer mixture) when the idle mixture adjusting screws are turned in the richer (counterclockwise) direction, proceed to adjust the carburetor to obtain a 14.2:1 air/fuel ratio by turning the screws counterclockwise (richer) to lower the meter reading and clockwise (leaner) to increase the meter reading. You should be able to obtain a satisfactory reading within the limitations of the limiter caps; if not, refer to the procedure given below for adjusting the idle mixture without the use of an exhaust gas analyzer.

7. If the idle speed changed during the

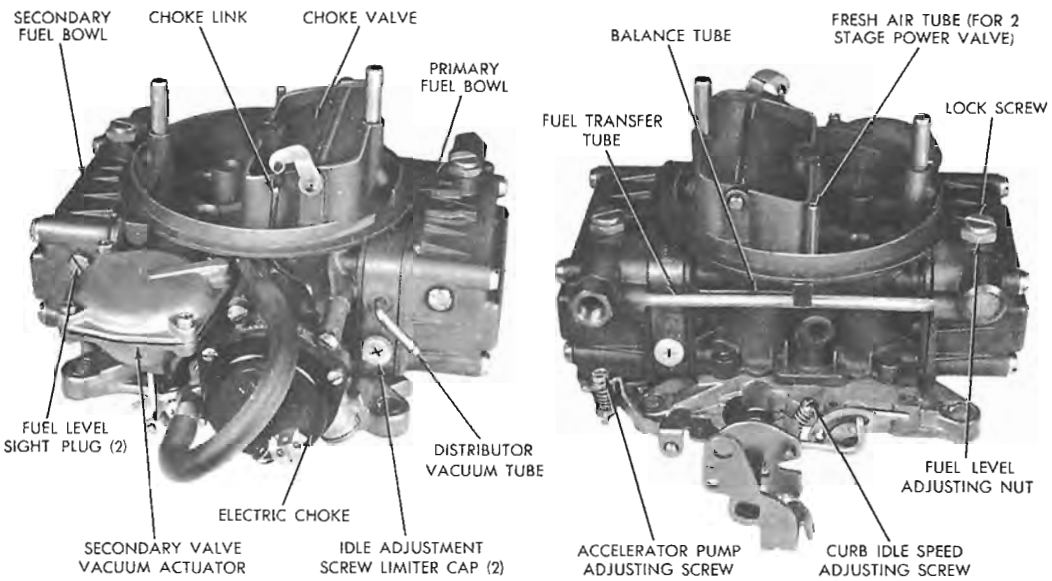

The Holley model series 4160C carburetor used on 413 V8s

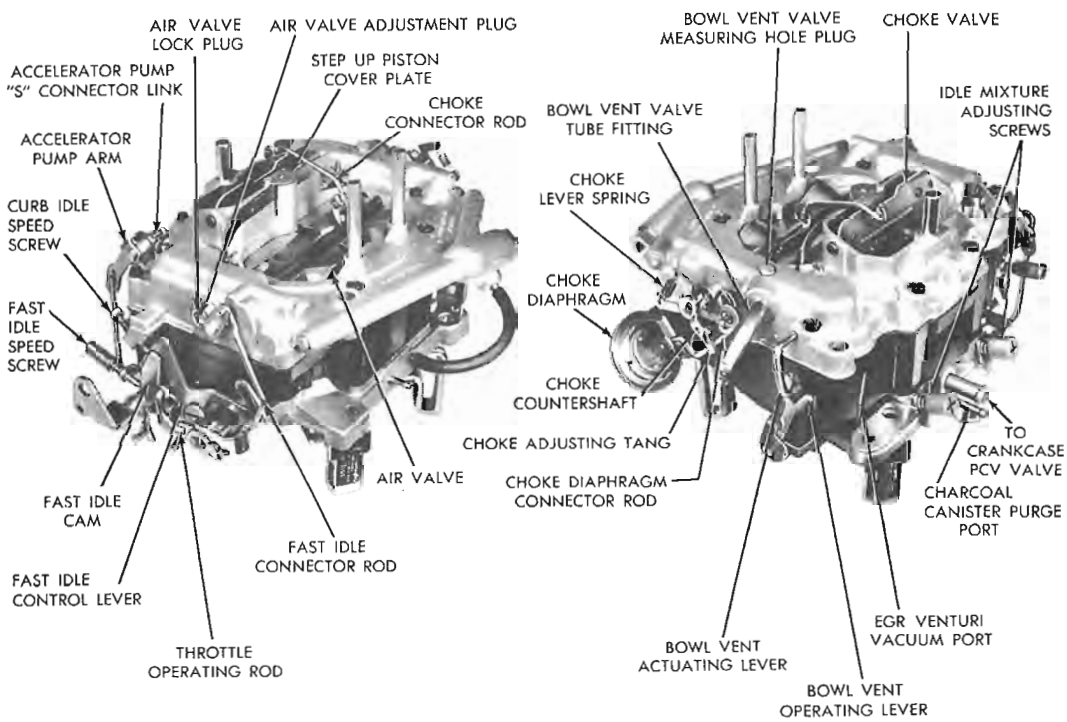

The Carter Thermo-Quad carburetor used on the 440 V8s

adjustment of the idle mixture, adjust the curb idle to the proper speed and check and adjust as necessary, the idle mixture to retain the 14.2:1 air/fuel ratio.

Without an Exhaust Gas Analyzer

Before adjusting the idle mixture without the aid of an exhaust gas analyzer, check and, as necessary, adjust the curb idle speed. Leave the tachometer connected to the engine.

It is recommended that you make the adjustment with the limiter caps in place, performing Step 4 of the procedure given below. However, if a satisfactory idle cannot be obtained with the limiter caps in place, remove them with a pair of pliers and start with Step 1.

1. Turn the idle mixture adjustment screws in until they lightly seat. Do not tighten them as damage could result.
2. Turn the screws out (counterclockwise) 1½ turns as a starting point.
3. Start the engine.
4. One at a time, turn the adjusting screws out until the engine starts to lose speed due to an overrich mixture; then turn the screw in (clockwise) past the original point until the engine again starts to lose speed due to an overly lean mixture. Turn the screw back out to a point in the middle of the two extremes and where the engine idles best.
5. Replace the limiter caps if they were removed. Position them in such a way so that the screws can be turned an equal distance in each direction.

After adjusting the idle mixture in the manner above, you would be wise to have the engine checked with an exhaust gas analyzer as a precautionary measure.

Engine Tune-Up

Engine tune-up is a procedure performed to restore engine performance, deteriorated due to normal wear and loss of adjustment. The three major areas considered in a routine tune-up are compression, ignition, and carburetion, although valve adjustment may be included.

A tune-up is performed in three steps: *analysis*, in which it is determined whether normal wear is responsible for performance loss, and which parts require replacement or service; *parts replacement or service*; and *adjustment*, in which engine adjustments are returned to original specifications. Since the advent of emission control equipment, precision adjustment has become increasingly critical, in order to maintain pollutant emission levels.

Analysis

The procedures below are used to indicate where adjustments, parts service or replacement are necessary within the realm of a normal tune-up. If, following these tests, all systems appear to be functioning properly, proceed to the Troubleshooting Section for further diagnosis.

—Remove all spark plugs, noting the cylinder in which they were installed. Remove the air cleaner, and position the throttle and choke in the full open position. Disconnect the coil high tension lead from the coil and the distributor cap. Insert a compression gauge into the spark plug port of each cylinder, in succession, and crank the engine with the starter to obtain the highest possible reading. Record the readings, and compare the highest to the lowest on the compression pressure limit chart. If the difference exceeds the limits on the chart, or if all readings are excessively low, proceed to a wet compression check (see Troubleshooting Section).

Maxi. Press. Lbs. Sq. In.	*Min. Press. Lbs. Sq. In.*	*Max. Press. Lbs. Sq. In.*	*Min. Press. Lbs. Sq. In.*
134	101	188	141
136	102	190	142
138	104	192	144
140	105	194	145
142	107	196	147
146	110	198	148
148	111	200	150
150	113	202	151
152	114	204	153
154	115	206	154
156	117	208	156
158	118	210	157
160	120	212	158
162	121	214	160
164	123	216	162
166	124	218	163
168	126	220	165
170	127	222	166
172	129	224	168
174	131	226	169
176	132	228	171
178	133	230	172
180	135	232	174
182	136	234	175
184	138	236	177
186	140	238	178

Compression pressure limits

—Evaluate the spark plugs according to the spark plug chart in the Troubleshooting Section, and proceed as indicated in the chart.

—Remove the distributor cap, and inspect it inside and out for cracks and/or carbon tracks, and inside for excessive wear or burning of the rotor contacts. If any of these faults are evident, the cap must be replaced.

—Check the breaker points for burning, pitting or wear, and the contact heel resting on the distributor cam for excessive wear. If defects are noted, replace the entire breaker point set.

—Remove and inspect the rotor. If the contacts are burned or worn, or if the rotor is excessively loose on the distributor shaft (where applicable), the rotor must be replaced.

—Inspect the spark plug leads and the coil high tension lead for cracks or brittleness. If any of the wires appear defective, the entire set should be replaced.

—Check the air filter to ensure that it is functioning properly.

Parts Replacement and Service

The determination of whether to replace or service parts is at the mechanic's discretion; however, it is suggested that any parts in questionable condition be replaced rather than reused.

—Clean and regap, or replace, the spark plugs as needed. Lightly coat the threads with engine oil and install the plugs. CAUTION: *Do not over-torque taper-seat spark plugs, or plugs being installed in aluminum cylinder heads.*

SPARK PLUG TORQUE

Thread size	*Cast-Iron Heads*	*Aluminum Heads*
10 mm.	14	11
14 mm.	30	27
18 mm.	34*	32
7/8 in.—18	37	35

* 17 ft. lbs. for tapered plugs using no gaskets.

—If the distributor cap is to be reused, clean the inside with a dry rag, and remove corrosion from the rotor contact points with fine emery cloth. Remove the spark plug wires one by one, and clean the wire ends and the inside of the towers. If the boots are loose, they should be replaced.

If the cap is to be replaced, transfer the wires one by one, cleaning the wire ends and replacing the boots if necessary.

—If the original points are to remain in service, clean them lightly with emery cloth, lubricate the contact heel with grease specifically designed for this purpose. Rotate the crankshaft until the heel rests on a high point of the distributor cam, and adjust the point gap to specifications.

When replacing the points, remove the original points and condenser, and wipe out the inside of the distributor housing with a clean, dry rag. Lightly lubricate the contact heel and pivot point, and install the points and condenser. Rotate the crankshaft until the heel rests on a high point of the distributor cam, and adjust the point gap to specifications. NOTE: *Always replace the condenser when changing the points.*

—If the rotor is to be reused, clean the contacts with solvent. Do not alter the spring tension of the rotor center contact. Install the rotor and the distributor cap.

—Replace the coil high tension lead and/or the spark plug leads as necessary.

—Clean the carburetor using a spray solvent (e.g., Gumout Spray). Remove the varnish from the throttle bores, and clean the linkage. Disconnect and plug the fuel line, and run the engine until it runs out of fuel. Partially fill the float chamber with solvent, and reconnect the fuel line. In extreme cases, the jets can be pressure flushed by inserting a rubber plug into the float vent, running the spray nozzle through it, and spraying the solvent until it squirts out of the venturi fuel dump.

—Clean and tighten all wiring connections in the primary electrical circuit.

Additional Services

The following services *should* be performed in conjunction with a routine tune-up to ensure efficient performance.

—Inspect the battery and fill to the proper level with distilled water. Remove the cable clamps, clean clamps and posts thoroughly, coat the posts lightly with petroleum jelly, reinstall and tighten.

—Inspect all belts, replace and/or adjust as necessary.

—Test the PCV valve (if so equipped), and clean or replace as indicated. Clean all crankcase ventilation hoses, or replace if cracked or hardened.

—Adjust the valves (if necessary) to manufacturer's specifications.

Adjustments

—Connect a dwell-tachometer between the distributor primary lead and ground. Remove the distributor cap and rotor (unless equipped with Delco externally adjustable distributor). With the ignition off, crank the engine with a remote starter switch and measure the point dwell angle. Adjust the dwell angle to specifications. NOTE: *Increasing the gap decreases the dwell angle and vice-versa.* Install the rotor and distributor cap.

—Connect a timing light according to the manufacturer's specifications. Identify the proper timing marks with chalk or paint. NOTE: *Luminescent (day-glo) paint is excellent for this purpose.* Start the engine, and run it until it reaches operating temperature. Disconnect and plug any distributor vacuum lines, and adjust idle to the speed required to adjust timing, according to specifications. Loosen the distributor clamp and adjust timing to specifications by rotating the distributor in the engine. NOTE: *To advance timing, rotate distributor opposite normal direction of rotor rotation, and vice-versa.*

—Synchronize the throttles and mixture of multiple carburetors (if so equipped) according to procedures given in the individual car sections.

—Adjust the idle speed, mixture, and idle quality, as specified in the car sections. Final idle adjustments should be made with the air cleaner installed. CAUTION: *Due to strict emission control requirements on 1969 and later models, special test equipment (CO meter, SUN Tester) may be necessary to properly adjust idle mixture to specifications.*

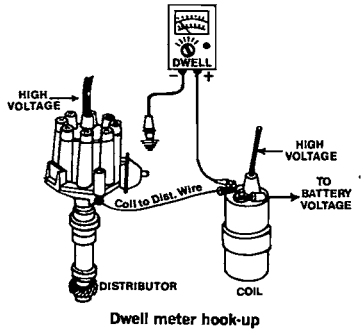

Dwell meter hook-up

Trouble-shooting

The following section is designed to aid in the rapid diagnosis of engine problems. The systematic format is used to diagnose problems ranging from engine starting difficulties to the need for engine overhaul. It is assumed that the user is equipped with basic hand tools and test equipment (tach-dwell meter, timing light, voltmeter, and ohmmeter).

Troubleshooting is divided into two sections. The first, *General Diagnosis*, is used to locate the problem area. In the second, *Specific Diagnosis*, the problem is systematically evaluated.

General Diagnosis

PROBLEM: Symptom	*Begin diagnosis at Section Two, Number ——*
Engine won't start:	
Starter doesn't turn	1.1, 2.1
Starter turns, engine doesn't	2.1
Starter turns engine very slowly	1.1, 2.4
Starter turns engine normally	3.1, 4.1
Starter turns engine very quickly	6.1
Engine fires intermittently	4.1
Engine fires consistently	5.1, 6.1
Engine runs poorly:	
Hard starting	3.1, 4.1, 5.1, 8.1
Rough idle	4.1, 5.1, 8.1
Stalling	3.1, 4.1, 5.1, 8.1
Engine dies at high speeds	4.1, 5.1
Hesitation (on acceleration from standing stop)	5.1, 8.1
Poor pickup	4.1, 5.1, 8.1
Lack of power	3.1, 4.1, 5.1, 8.1
Backfire through the carburetor	4.1, 8.1, 9.1
Backfire through the exhaust	4.1, 8.1, 9.1
Blue exhaust gases	6.1, 7.1
Black exhaust gases	5.1
Running on (after the ignition is shut off)	3.1, 8.1
Susceptible to moisture	4.1
Engine misfires under load	4.1, 7.1, 8.4, 9.1
Engine misfires at speed	4.1, 8.4
Engine misfires at idle	3.1, 4.1, 5.1, 7.1, 8.4

PROBLEM: Symptom	*Probable Cause*
Engine noises: ①	
Metallic grind while starting	Starter drive not engaging completely
Constant grind or rumble	*Starter drive not releasing, worn main bearings
Constant knock	Worn connecting rod bearings
Knock under load	Fuel octane too low, worn connecting rod bearings
Double knock	Loose piston pin
Metallic tap	*Collapsed or sticky valve lifter, excessive valve clearance, excessive end play in a rotating shaft
Scrape	*Fan belt contacting a stationary surface
Tick while starting	S.U. electric fuel pump (normal), starter brushes
Constant tick	*Generator brushes, shreaded fan belt
Squeal	*Improperly tensioned fan belt
Hiss or roar	*Steam escaping through a leak in the cooling system or the radiator overflow vent
Whistle	*Vacuum leak
Wheeze	Loose or cracked spark plug

①—It is extremely difficult to evaluate vehicle noises. While the above are general definitions of engine noises, those starred (*) should be considered as possibly originating elsewhere in the car. To aid diagnosis, the following list considers other potential sources of these sounds.

Metallic grind:
Throwout bearing; transmission gears, bearings, or synchronizers; differential bearings, gears; something metallic in contact with brake drum or disc.

Metallic tap:
U-joints; fan-to-radiator (or shroud) contact.

Scrape:
Brake shoe or pad dragging; tire to body contact; suspension contacting undercarriage or exhaust; something non-metallic contacting brake shoe or drum.

Tick:
Transmission gears; differential gears; lack of radio suppression; resonant vibration of body panels; windshield wiper motor or transmission; heater motor and blower.

Squeal:
Brake shoe or pad not fully releasing; tires (excessive wear, uneven wear, improper inflation); front or rear wheel alignment (most commonly due to improper toe-in).

Hiss or whistle:
Wind leaks (body or window); heater motor and blower fan.

Roar:
Wheel bearings; wind leaks (body and window).

Specific Diagnosis

This section is arranged so that following each test, instructions are given to proceed to another, until a problem is diagnosed.

INDEX

Group		Topic
1	*	Battery
2	*	Cranking system
3	*	Primary electrical system
4	*	Secondary electrical system
5	*	Fuel system
6	*	Engine compression
7	**	Engine vacuum
8	**	Secondary electrical system
9	**	Valve train
10	**	Exhaust system
11	**	Cooling system
12	**	Engine lubrication

*—The engine need not be running.
**—The engine must be running.

SAMPLE SECTION

Test and Procedure	Results and Indications	Proceed to
4.1—Check for spark: Hold each spark plug wire approximately 1/4" from ground with gloves or a heavy, dry rag. Crank the engine and observe the spark.	If no spark is evident:	4.2
	If spark is good in some cases:	4.3
	If spark is good in all cases:	4.6

DIAGNOSIS

1.1—Inspect the battery visually for case condition (corrosion, cracks) and water level.	If case is cracked, replace battery:	1.4
	If the case is intact, remove corrosion with a solution of baking soda and water (CAUTION: *do not get the solution into the battery*), and fill with water:	1.2
1.2—Check the battery cable connections: Insert a screwdriver between the battery post and the cable clamp. Turn the headlights on high beam, and observe them as the screwdriver is gently twisted to ensure good metal to metal contact.	If the lights brighten, remove and clean the clamp and post; coat the post with petroleum jelly, install and tighten the clamp:	1.4
	If no improvement is noted:	1.3

Testing battery cable connections using a screwdriver

1.3—Test the state of charge of the battery using an individual cell tester or hydrometer.

Spec. Grav. Reading	Charged Condition
1.260-1.280	Fully Charged
1.230-1.250	Three Quarter Charged
1.200-1.220	One Half Charged
1.170-1.190	One Quarter Charged
1.140-1.160	Just About Flat
1.110-1.130	All The Way Down

State of battery charge

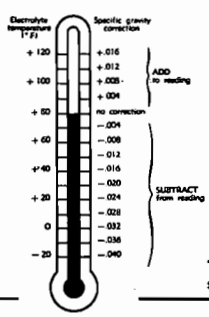

The effect of temperature on the specific gravity of battery electrolyte

If indicated, charge the battery. NOTE: *If no obvious reason exists for the low state of charge (i.e., battery age, prolonged storage), the charging system should be tested:* 1.4

Test and Procedure	*Results and Indications*	*Proceed to*
1.4—Visually inspect battery cables for cracking, bad connection to ground, or bad connection to starter.	If necessary, tighten connections or replace the cables:	2.1

Tests in Group 2 are performed with coil high tension lead disconnected to prevent accidental starting.

2.1—Test the starter motor and solenoid: Connect a jumper from the battery post of the solenoid (or relay) to the starter post of the solenoid (or relay).	If starter turns the engine normally:	2.2
	If the starter buzzes, or turns the engine very slowly:	2.4
	If no response, replace the solenoid (or relay).	3.1
	If the starter turns, but the engine doesn't, ensure that the flywheel ring gear is intact. If the gear is undamaged, replace the starter drive.	3.1
2.2—Determine whether ignition override switches are functioning properly (clutch start switch, neutral safety switch), by connecting a jumper across the switch(es), and turning the ignition switch to "start".	If starter operates, adjust or replace switch:	3.1
	If the starter doesn't operate:	2.3
2.3—Check the ignition switch "start" position: Connect a 12V test lamp between the starter post of the solenoid (or relay) and ground. Turn the ignition switch to the "start" position, and jiggle the key.	If the lamp doesn't light when the switch is turned, check the ignition switch for loose connections, cracked insulation, or broken wires. Repair or replace as necessary:	3.1
	If the lamp flickers when the key is jiggled, replace the ignition switch.	3.3
2.4—Remove and bench test the starter, according to specifications in the car section.	If the starter does not meet specifications, repair or replace as needed:	3.1
	If the starter is operating properly:	2.5
2.5—Determine whether the engine can turn freely: Remove the spark plugs, and check for water in the cylinders. Check for water on the dipstick, or oil in the radiator. Attempt to turn the engine using an 18" flex drive and socket on the crankshaft pulley nut or bolt.	If the engine will turn freely only with the spark plugs out, and hydrostatic lock (water in the cylinders) is ruled out, check valve timing:	9.2
	If engine will not turn freely, and it is known that the clutch and transmission are free, the engine must be disassembled for further evaluation:	Next Chapter

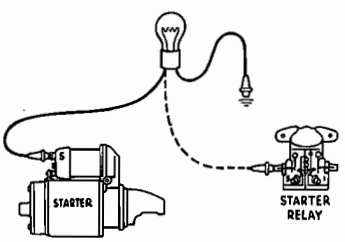

Checking the ignition switch "start" position

Tests and Procedures	*Results and Indications*	*Proceed to*
3.1—Check the ignition switch "on" position: Connect a jumper wire between the distributor side of the coil and ground, and a 12V test lamp between the switch side of the coil and ground. Remove the high tension lead from the coil. Turn the ignition switch on and jiggle the key.	If the lamp lights:	3.2
	If the lamp flickers when the key is jiggled, replace the ignition switch:	3.3
	If the lamp doesn't light, check for loose or open connections. If none are found, remove the ignition switch and check for continuity. If the switch is faulty, replace it:	3.3
3.2—Check the ballast resistor or resistance wire for an open circuit, using an ohmmeter.	Replace the resistor or the resistance wire if the resistance is zero.	3.3
3.3—Visually inspect the breaker points for burning, pitting, or excessive wear. Gray coloring of the point contact surfaces is normal. Rotate the crankshaft until the contact heel rests on a high point of the distributor cam, and adjust the point gap to specifications.	If the breaker points are intact, clean the contact surfaces with fine emery cloth, and adjust the point gap to specifications. If pitted or worn, replace the points and condenser, and adjust the gap to specifications: NOTE: *Always lubricate the distributor cam according to manufacturer's recommendations when servicing the breaker points.*	3.4
3.4—Connect a dwell meter between the distributor primary lead and ground. Crank the engine and observe the point dwell angle.	If necessary, adjust the point dwell angle: NOTE: *Increasing the point gap decreases the dwell angle, and vice-versa.*	3.6
	If dwell meter shows little or no reading:	3.5
3.5—Check the condenser for short: Connect an ohmmeter across the condenser body and the pigtail lead.	If any reading other than infinite resistance is noted, replace the condenser:	3.6

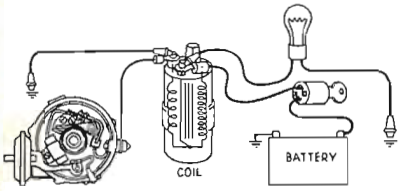

Checking the ignition switch "on" position

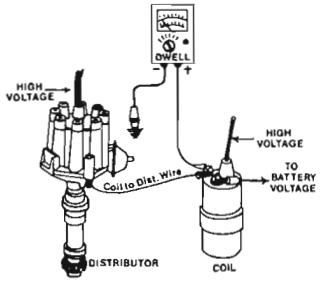

Dwell meter hook-up

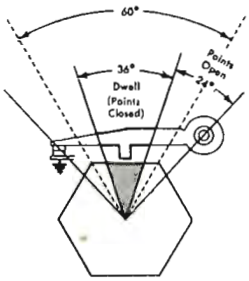

Dwell angle

Checking the condenser for short

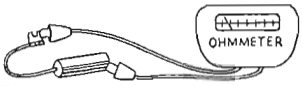

Test and Procedure	*Results and Indications*	*Proceed to*
3.6—Test the coil primary resistance: Connect an ohmmeter across the coil primary terminals, and read the resistance on the low scale. Note whether an external ballast resistor or resistance wire is utilized.	Coils utilizing ballast resistors or resistance wires should have approximately 1.0Ω resistance; coils with internal resistors should have approximately 4.0Ω resistance. If values far from the above are noted, replace the coil:	4.1
4.1—Check for spark: Hold each spark plug wire approximately ¼″ from ground with gloves or a heavy, dry rag. Crank the engine, and observe the spark.	If no spark is evident:	4.2
	If spark is good in some cylinders:	4.3
	If spark is good in all cylinders:	4.6
4.2—Check for spark at the coil high tension lead: Remove the coil high tension lead from the distributor and position it approximately ¼″ from ground. Crank the engine and observe spark. CAUTION: *This test should not be performed on cars equipped with transistorized ignition.*	If the spark is good and consistent:	4.3
	If the spark is good but intermittent, test the primary electrical system starting at 3.3:	3.3
	If the spark is weak or non-existent, replace the coil high tension lead, clean and tighten all connections and retest. If no improvement is noted:	4.4
4.3—Visually inspect the distributor cap and rotor for burned or corroded contacts, cracks, carbon tracks, or moisture. Also check the fit of the rotor on the distributor shaft (where applicable).	If moisture is present, dry thoroughly, and retest per 4.1:	4.1
	If burned or excessively corroded contacts, cracks, or carbon tracks are noted, replace the defective part(s) and retest per 4.1:	4.1
	If the rotor and cap appear intact, or are only slightly corroded, clean the contacts thoroughly (including the cap towers and spark plug wire ends) and retest per 4.1:	
	If the spark is good in all cases:	4.6
	If the spark is poor in all cases:	4.5
4.4—Check the coil secondary resistance: Connect an ohmmeter across the distributor side of the coil and the coil tower. Read the resistance on the high scale of the ohmmeter.	The resistance of a satisfactory coil should be between 4KΩ and 10KΩ. If the resistance is considerably higher (i.e., 40KΩ) replace the coil, and retest per 4.1: NOTE: *This does not apply to high performance coils.*	4.1

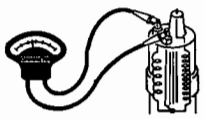

Testing the coil primary resistance

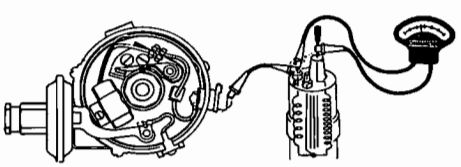

Testing the coil secondary resistance

Test and Procedure	*Results and Indications*	*Proceed to*
4.5—Visually inspect the spark plug wires for cracking or brittleness. Ensure that no two wires are positioned so as to cause induction firing (adjacent and parallel). Remove each wire, one by one, and check resistance with an ohmmeter.	Replace any cracked or brittle wires. If any of the wires are defective, replace the entire set. Replace any wires with excessive resistance (over 8000Ω per foot for suppression wire), and separate any wires that might cause induction firing.	4.6
4.6—Remove the spark plugs, noting the cylinders from which they were removed, and evaluate according to the chart below.	See below.	See below.

	Condition	*Cause*	*Remedy*	*Proceed to*
	Electrodes eroded, light brown deposits.	Normal wear. Normal wear is indicated by approximately .001″ wear per 1000 miles.	Clean and regap the spark plug if wear is not excessive: Replace the spark plug if excessively worn:	4.7
	Carbon fouling (black, dry, fluffy deposits).	If present on one or two plugs:		
		Faulty high tension lead(s).	Test the high tension leads:	4.5
		Burnt or sticking valve(s).	Check the valve train: (Clean and regap the plugs in either case.)	9.1
		If present on most or all plugs: Overly rich fuel mixture, due to restricted air filter, improper carburetor adjustment, improper choke or heat riser adjustment or operation.	Check the fuel system:	5.1
	Oil fouling (wet black deposits)	Worn engine components. NOTE: *Oil fouling may occur in new or recently rebuilt engines until broken in.*	Check engine vacuum and compression:	6.1
			Replace with new spark plug	
	Lead fouling (gray, black, tan, or yellow deposits, which appear glazed or cinder-like).	Combustion by-products.	Clean and regap the plugs: (Use plugs of a different heat range if the problem recurs.)	4.7

	Condition	*Cause*	*Remedy*	*Proceed to*
	Gap bridging (deposits lodged between the electrodes).	Incomplete combustion, or transfer of deposits from the combustion chamber.	Replace the spark plugs:	4.7
	Overheating (burnt electrodes, and extremely white insulator with small black spots).	Ignition timing advanced too far.	Adjust timing to specifications:	8.2
		Overly lean fuel mixture.	Check the fuel system:	5.1
		Spark plugs not seated properly.	Clean spark plug seat and install a new gasket washer: (Replace the spark plugs in all cases.)	4.7
	Fused spot deposits on the insulator.	Combustion chamber blow-by.	Clean and regap the spark plugs:	4.7
	Pre-ignition (melted or severely burned electrodes, blistered or cracked insulators, or metallic deposits on the insulator).	Incorrect spark plug heat range.	Replace with plugs of the proper heat range:	4.7
		Ignition timing advanced too far.	Adjust timing to specifications:	8.2
		Spark plugs not being cooled efficiently.	Clean the spark plug seat, and check the cooling system:	11.1
		Fuel mixture too lean.	Check the fuel system:	5.1
		Poor compression.	Check compression:	6.1
		Fuel grade too low.	Use higher octane fuel:	4.7

Test and Procedure	*Results and Indications*	*Proceed to*
4.7—Determine the static ignition timing: Using the flywheel or crankshaft pulley timing marks as a guide, locate top dead center on the *compression* stroke of the No. 1 cylinder. Remove the distributor cap.	Adjust the distributor so that the rotor points toward the No. 1 tower in the distributor cap, and the points are just opening:	4.8
4.8—Check coil polarity: Connect a voltmeter negative lead to the coil high tension lead, and the positive lead to ground (NOTE: *reverse the hook-up for positive ground cars*). Crank the engine momentarily.  Checking coil polarity	If the voltmeter reads up-scale, the polarity is correct:	5.1
	If the voltmeter reads down-scale, reverse the coil polarity (switch the primary leads):	5.1

Test and Procedure	*Results and Indications*	*Proceed to*
5.1—Determine that the air filter is functioning efficiently: Hold paper elements up to a strong light, and attempt to see light through the filter.	Clean permanent air filters in gasoline (or manufacturer's recommendation), and allow to dry. Replace paper elements through which light cannot be seen:	5.2
5.2—Determine whether a flooding condition exists: Flooding is identified by a strong gasoline odor, and excessive gasoline present in the throttle bore(s) of the carburetor.	If flooding is not evident:	5.3
	If flooding is evident, permit the gasoline to dry for a few moments and restart. If flooding doesn't recur:	5.6
	If flooding is persistant:	5.5
5.3—Check that fuel is reaching the carburetor: Detach the fuel line at the carburetor inlet. Hold the end of the line in a cup (not styrofoam), and crank the engine.	If fuel flows smoothly:	5.6
	If fuel doesn't flow (NOTE: *Make sure that there is fuel in the tank*), or flows erratically:	5.4
5.4—Test the fuel pump: Disconnect all fuel lines from the fuel pump. Hold a finger over the input fitting, crank the engine (with electric pump, turn the ignition or pump on); and feel for suction.	If suction is evident, blow out the fuel line to the tank with low pressure compressed air until bubbling is heard from the fuel filler neck. Also blow out the carburetor fuel line (both ends disconnected):	5.6
	If no suction is evident, replace or repair the fuel pump:	5.6
	NOTE: *Repeated oil fouling of the spark plugs, or a no-start condition, could be the result of a ruptured vacuum booster pump diaphragm, through which oil or gasoline is being drawn into the intake manifold (where applicable).*	
5.5—Check the needle and seat: Tap the carburetor in the area of the needle and seat.	If flooding stops, a gasoline additive (e.g., Gumout) will often cure the problem:	5.6
	If flooding continues, check the fuel pump for excessive pressure at the carburetor (according to specifications). If the pressure is normal, the needle and seat must be removed and checked, and/or the float level adjusted:	5.6
5.6—Test the accelerator pump by looking into the throttle bores while operating the throttle.	If the accelerator pump appears to be operating normally:	5.7
	If the accelerator pump is not operating, the pump must be reconditioned. Where possible, service the pump with the carburetor(s) installed on the engine. If necessary, remove the carburetor. Prior to removal:	5.7
5.7—Determine whether the carburetor main fuel system is functioning: Spray a commercial starting fluid into the carburetor while attempting to start the engine.	If the engine starts, runs for a few seconds, and dies:	5.8
	If the engine doesn't start:	6.1

Test and Procedures	*Results and Indications*	*Proceed to*
5.8—Uncommon fuel system malfunctions: See below:	If the problem is solved:	6.1
	If the problem remains, remove and recondition the carburetor.	

Condition	*Indication*	*Test*	*Usual Weather Conditions*	*Remedy*
Vapor lock	Car will not restart shortly after running.	Cool the components of the fuel system until the engine starts.	Hot to very hot	Ensure that the exhaust manifold heat control valve is operating. Check with the vehicle manufacturer for the recommended solution to vapor lock on the model in question.
Carburetor icing	Car will not idle, stalls at low speeds.	Visually inspect the throttle plate area of the throttle bores for frost.	High humidity, 32-40° F.	Ensure that the exhaust manifold heat control valve is operating, and that the intake manifold heat riser is not blocked.
Water in the fuel	Engine sputters and stalls; may not start.	Pump a small amount of fuel into a glass jar. Allow to stand, and inspect for droplets or a layer of water.	High humidity, extreme temperature changes.	For droplets, use one or two cans of commercial gas dryer (Dry Gas) For a layer of water, the tank must be drained, and the fuel lines blown out with compressed air.

Test and Procedure	*Results and Indications*	*Proceed to*
6.1—Test engine compression: Remove all spark plugs. Insert a compression gauge into a spark plug port, crank the engine to obtain the maximum reading, and record.	If compression is within limits on all cylinders:	7.1
	If gauge reading is extremely low on all cylinders:	6.2
	If gauge reading is low on one or two cylinders: (If gauge readings are identical and low on two or more adjacent cylinders, the head gasket must be replaced.)	6.2

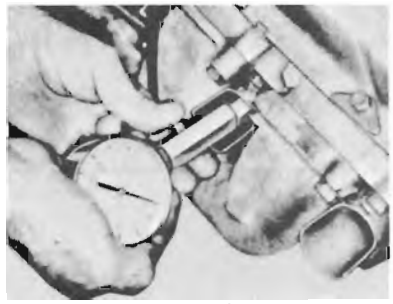

Testing compression
(© Chevrolet Div. G.M. Corp.)

Maxi. Press. Lbs. Sq. In.	*Min. Press. Lbs. Sq. In.*	*Maxi. Press. Lbs. Sq. In.*	*Min. Press. Lbs. Sq. In.*	*Max. Press. Lbs. Sq. In.*	*Min. Press. Lbs. Sq. In.*	*Max. Press. Lbs. Sq. In.*	*Min. Press. Lbs. Sq. In.*
134	101	162	121	188	141	214	160
136	102	164	123	190	142	216	162
138	104	166	124	192	144	218	163
140	105	168	126	194	145	220	165
142	107	170	127	196	147	222	166
146	110	172	129	198	148	224	168
148	111	174	131	200	150	226	169
150	113	176	132	202	151	228	171
152	114	178	133	204	153	230	172
154	115	180	135	206	154	232	174
156	117	182	136	208	156	234	175
158	118	184	138	210	157	236	177
160	120	186	140	212	158	238	178

Compression pressure limits
(© Buick Div. G.M. Corp.)

Test and Procedure	*Results and Indications*	*Proceed to*
6.2—Test engine compression (wet): Squirt approximately 30 cc. of engine oil into each cylinder, and retest per 6.1.	If the readings improve, worn or cracked rings or broken pistons are indicated: If the readings do not improve, burned or excessively carboned valves or a jumped timing chain are indicated: NOTE: *A jumped timing chain is often indicated by difficult cranking.*	Next Chapter 7.1
7.1—Perform a vacuum check of the engine: Attach a vacuum gauge to the intake manifold beyond the throttle plate. Start the engine, and observe the action of the needle over the range of engine speeds.	See below.	See below

	Reading	*Indications*	*Proceed to*
	Steady, from 17-22 in. Hg.	Normal.	8.1
	Low and steady.	Late ignition or valve timing, or low compression:	6.1
	Very low	Vacuum leak:	7.2
	Needle fluctuates as engine speed increases.	Ignition miss, blown cylinder head gasket, leaking valve or weak valve spring:	6.1, 8.3
	Gradual drop in reading at idle.	Excessive back pressure in the exhaust system:	10.1
	Intermittent fluctuation at idle.	Ignition miss, sticking valve:	8.3, 9.1
	Drifting needle.	Improper idle mixture adjustment, carburetors not synchronized (where applicable), or minor intake leak. Synchronize the carburetors, adjust the idle, and retest. If the condition persists:	7.2
	High and steady.	Early ignition timing:	8.2

Test and Procedure	*Results and Indications*	*Proceed to*
7.2—Attach a vacuum gauge per 7.1, and test for an intake manifold leak. Squirt a small amount of oil around the intake manifold gaskets, carburetor gaskets, plugs and fittings. Observe the action of the vacuum gauge.	If the reading improves, replace the indicated gasket, or seal the indicated fitting or plug:	8.1
	If the reading remains low:	7.3
7.3—Test all vacuum hoses and accessories for leaks as described in 7.2. Also check the carburetor body (dashpots, automatic choke mechanism, throttle shafts) for leaks in the same manner.	If the reading improves, service or replace the offending part(s):	8.1
	If the reading remains low:	6.1
8.1—Check the point dwell angle: Connect a dwell meter between the distributor primary wire and ground. Start the engine, and observe the dwell angle from idle to 3000 rpm.	If necessary, adjust the dwell angle. NOTE: *Increasing the point gap reduces the dwell angle and vice-versa.* If the dwell angle moves outside specifications as engine speed increases, the distributor should be removed and checked for cam accuracy, shaft endplay and concentricity, bushing wear, and adequate point arm tension (NOTE: *Most of these items may be checked with the distributor installed in the engine, using an oscilloscope*):	8.2
8.2—Connect a timing light (per manufacturer's recommendation) and check the dynamic ignition timing. Disconnect and plug the vacuum hose(s) to the distributor if specified, start the engine, and observe the timing marks at the specified engine speed.	If the timing is not correct, adjust to specifications by rotating the distributor in the engine: (Advance timing by rotating distributor opposite normal direction of rotor rotation, retard timing by rotating distributor in same direction as rotor rotation.)	8.3
8.3—Check the operation of the distributor advance mechanism(s): To test the mechanical advance, disconnect all but the mechanical advance, and observe the timing marks with a timing light as the engine speed is increased from idle. If the mark moves smoothly, without hesitation, it may be assumed that the mechanical advance is functioning properly. To test vacuum advance and/or retard systems, alternately crimp and release the vacuum line, and observe the timing mark for movement. If movement is noted, the system is operating.	If the systems are functioning:	8.4
	If the systems are not functioning, remove the distributor, and test on a distributor tester:	8.4
8.4—Locate an ignition miss: With the engine running, remove each spark plug wire, one by one, until one is found that doesn't cause the engine to roughen and slow down.	When the missing cylinder is identified:	4.1

Test and Procedure	*Results and Indications*	*Proceed to*
9.1—Evaluate the valve train: Remove the valve cover, and ensure that the valves are adjusted to specifications. A mechanic's stethoscope may be used to aid in the diagnosis of the valve train. By pushing the probe on or near push rods or rockers, valve noise often can be isolated. A timing light also may be used to diagnose valve problems. Connect the light according to manufacturer's recommendations, and start the engine. Vary the firing moment of the light by increasing the engine speed (and therefore the ignition advance), and moving the trigger from cylinder to cylinder. Observe the movement of each valve.	See below	See below

Observation	*Probable Cause*	*Remedy*	*Proceed to*
Metallic tap heard through the stethoscope.	Sticking hydraulic lifter or excessive valve clearance.	Adjust valve. If tap persists, remove and replace the lifter:	10.1
Metallic tap through the stethoscope, able to push the rocker arm (lifter side) down by hand.	Collapsed valve lifter.	Remove and replace the lifter:	10.1
Erratic, irregular motion of the valve stem.*	Sticking valve, burned valve.	Recondition the valve and/or valve guide:	Next Chapter
Eccentric motion of the pushrod at the rocker arm.*	Bent pushrod.	Replace the pushrod:	10.1
Valve retainer bounces as the valve closes.*	Weak valve spring or damper.	Remove and test the spring and damper. Replace if necessary:	10.1

*—When observed with a timing light.

Test and Procedure	*Results and Indications*	*Proceed to*
9.2—Check the valve timing: Locate top dead center of the No. 1 piston, and install a degree wheel or tape on the crankshaft pulley or damper with zero corresponding to an index mark on the engine. Rotate the crankshaft in its direction of rotation, and observe the opening of the No. 1 cylinder intake valve. The opening should correspond with the correct mark on the degree wheel according to specifications.	If the timing is not correct, the timing cover must be removed for further investigation:	

Test and Procedure	*Results and Indications*	*Proceed to*
10.1—Determine whether the exhaust manifold heat control valve is operating: Operate the valve by hand to determine whether it is free to move. If the valve is free, run the engine to operating temperature and observe the action of the valve, to ensure that it is opening.	If the valve sticks, spray it with a suitable solvent, open and close the valve to free it, and retest.	
	If the valve functions properly:	10.2
	If the valve does not free, or does not operate, replace the valve:	10.2
10.2—Ensure that there are no exhaust restrictions: Visually inspect the exhaust system for kinks, dents, or crushing. Also note that gasses are flowing freely from the tailpipe at all engine speeds, indicating no restriction in the muffler or resonator.	Replace any damaged portion of the system:	11.1
11.1—Visually inspect the fan belt for glazing, cracks, and fraying, and replace if necessary. Tighten the belt so that the longest span has approximately ½" play at its midpoint under thumb pressure.	Replace or tighten the fan belt as necessary:	11.2
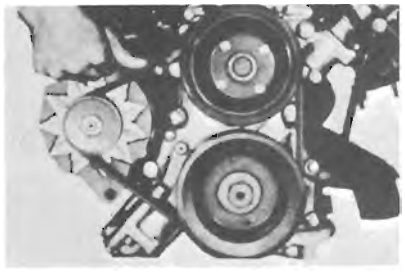 Checking the fan belt tension (© Nissan Motor Co. Ltd.)		
11.2—Check the fluid level of the cooling system.	If full or slightly low, fill as necessary:	11.5
	If extremely low:	11.3
11.3—Visually inspect the external portions of the cooling system (radiator, radiator hoses, thermostat elbow, water pump seals, heater hoses, etc.) for leaks. If none are found, pressurize the cooling system to 14-15 psi.	If cooling system holds the pressure:	11.5
	If cooling system loses pressure rapidly, reinspect external parts of the system for leaks under pressure. If none are found, check dipstick for coolant in crankcase. If no coolant is present, but pressure loss continues:	11.4
	If coolant is evident in crankcase, remove cylinder head(s), and check gasket(s). If gaskets are intact, block and cylinder head(s) should be checked for cracks or holes.	
	If the gasket(s) is blown, replace, and purge the crankcase of coolant:	12.6
	NOTE: *Occasionally, due to atmospheric and driving conditions, condensation of water can occur in the crankcase. This causes the oil to appear milky white. To remedy, run the engine until hot, and change the oil and oil filter.*	

Test and Procedure	*Results and Indication*	*Proceed to*
11.4—Check for combustion leaks into the cooling system: Pressurize the cooling system as above. Start the engine, and observe the pressure gauge. If the needle fluctuates, remove each spark plug wire, one by one, noting which cylinder(s) reduce or eliminate the fluctuation.  Radiator pressure tester (© American Motors Corp.)	Cylinders which reduce or eliminate the fluctuation, when the spark plug wire is removed, are leaking into the cooling system. Replace the head gasket on the affected cylinder bank(s).	
11.5—Check the radiator pressure cap: Attach a radiator pressure tester to the radiator cap (wet the seal prior to installation). Quickly pump up the pressure, noting the point at which the cap releases.  Testing the radiator pressure cap (© American Motors Corp.)	If the cap releases within ± 1 psi of the specified rating, it is operating properly:	11.6
	If the cap releases at more than ± 1 psi of the specified rating, it should be replaced:	11.6
11.6—Test the thermostat: Start the engine cold, remove the radiator cap, and insert a thermometer into the radiator. Allow the engine to idle. After a short while, there will be a sudden, rapid increase in coolant temperature. The temperature at which this sharp rise stops is the thermostat opening temperature.	If the thermostat opens at or about the specified temperature:	11.7
	If the temperature doesn't increase: (If the temperature increases slowly and gradually, replace the thermostat.)	11.7
11.7—Check the water pump: Remove the thermostat elbow and the thermostat, disconnect the coil high tension lead (to prevent starting), and crank the engine momentarily.	If coolant flows, replace the thermostat and retest per 11.6:	11.6
	If coolant doesn't flow, reverse flush the cooling system to alleviate any blockage that might exist. If system is not blocked, and coolant will not flow, recondition the water pump.	—
12.1—Check the oil pressure gauge or warning light: If the gauge shows low pressure, or the light is on, for no obvious reason, remove the oil pressure sender. Install an accurate oil pressure gauge and run the engine momentarily.	If oil pressure builds normally, run engine for a few moments to determine that it is functioning normally, and replace the sender.	—
	If the pressure remains low:	12.2
	If the pressure surges:	12.3
	If the oil pressure is zero:	12.3

Test and Procedure	*Results and Indications*	*Proceed to*
12.2—Visually inspect the oil: If the oil is watery or very thin, milky, or foamy, replace the oil and oil filter.	If the oil is normal:	12.3
	If after replacing oil the pressure remains low:	12.3
	If after replacing oil the pressure becomes normal:	—
12.3—Inspect the oil pressure relief valve and spring, to ensure that it is not sticking or stuck. Remove and thoroughly clean the valve, spring, and the valve body.	If the oil pressure improves:	—
	If no improvement is noted:	12.4
12.4—Check to ensure that the oil pump is not cavitating (sucking air instead of oil): See that the crankcase is neither over nor underfull, and that the pickup in the sump is in the proper position and free from sludge.	Fill or drain the crankcase to the proper capacity, and clean the pickup screen in solvent if necessary. If no improvement is noted:	12.5
12.5—Inspect the oil pump drive and the oil pump:	If the pump drive or the oil pump appear to be defective, service as necessary and retest per 12.1:	12.1
	If the pump drive and pump appear to be operating normally, the engine should be disassembled to determine where blockage exists:	Next Chapter
12.6—Purge the engine of ethylene glycol coolant: Completely drain the crankcase and the oil filter. Obtain a commercial butyl cellosolve base solvent, designated for this purpose, and follow the instructions precisely. Following this, install a new oil filter and refill the crankcase with the proper weight oil. The next oil and filter change should follow shortly thereafter (1000 miles).		

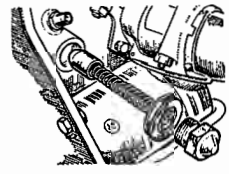

Oil pressure relief valve
(© British Leyland Motors)

3 · Engine and Engine Rebuilding

Engine Electrical

DISTRIBUTOR

Removal

1. Remove the coil wire from the distributor cap terminal.
2. Remove the distributor cap.
3. Disconnect the vacuum advance line at the distributor.
4. Note the position of the rotor and scribe a mark on the distributor body, indicating its position. Scribe two more marks, one on the body of the distributor and another on the engine block, indicating the position of the distributor body in relation to the engine block. All of the scribe marks should be made in line with each other, starting with the metal tip of the rotor and ending with the mark on the engine block. These marks are to be used as guides when installing the distributor in the correctly timed engine (not disturbed).
5. Remove the retaining bolt and lockwasher which hold the distributor in the engine.
6. Lift the distributor out of the engine block.

Installation (Engine Not Disturbed)

1. Insert the distributor shaft into the engine. Align the marks on the distributor body with the metal tip of the rotor and the mark made on the engine block. Make sure that the vacuum advance diaphragm is pointed in the same direction as it was pointed originally. This will be done automatically if the marks on the engine and the distributor are aligned properly.
2. Install the distributor clamp and lockbolt. Leave the screw loose enough so that you can turn the distributor with your hand.
3. Connect the distributor primary wire and install the distributor cap. Secure the distributor cap with the spring clips.
4. Install the spark plug wires. Make certain that the wires are pressed all the way into the top of the distributor cap and firmly onto the spark plugs.
5. Adjust the point cam dwell and set the ignition timing. Refer to the "Tune-Up" Section of Chapter 2.

Installation (Engine Disturbed)

If the engine has been disturbed, (i.e., crankshaft turned) while the distributor has been removed, or the alignment marks were not drawn, it will be necessary to initially time the engine. Follow the procedure below.

1. Place the No. 1 piston at TDC of the compression stroke. To determine this, remove the spark plug from the No. 1 cylinder and the high-tension coil wire from

the distributor cap. Place your thumb over the spark plug hole while the engine is cranked. You will feel air being forced out of the cylinder as the piston comes up on its compression stroke. As soon as you feel this, stop cranking the engine. The final positioning adjustment for the No. 1 piston is to align the TDC timing mark with the 0° mark on the scale on the timing case cover.

2. Lightly oil the distributor housing where the distributor mounts on the cylinder block.

3. Install the distributor so that the rotor, which is mounted on the shaft in its normal position, points toward the No. 1 spark plug terminal of the distributor cap. To facilitate this operation, place the distributor cap on the distributor body in its normal position and make a mark on the body of the distributor just below the No. 1 spark plug terminal tower. Make sure that the metal tip of the rotor is pointing toward the mark when the distributor is installed.

4. When the distributor shaft has reached the bottom of the hole, move the rotor back and forth slightly until the distributor shaft slides down into place. All the distributors have a tab on the end of their driveshafts which fits into a slot in the top of the oil pump driveshaft and the distributor will only go in in two ways. With the No. 1 piston on TDC of its compression stroke, the slot in the top of the oil pump driveshaft on the 318 V8 is in line with the front intake manifold attaching bolt on the left-side of the engine. On the 413 and 440 V8s, the slot in the shaft should be parallel with the centerline of the crankshaft.

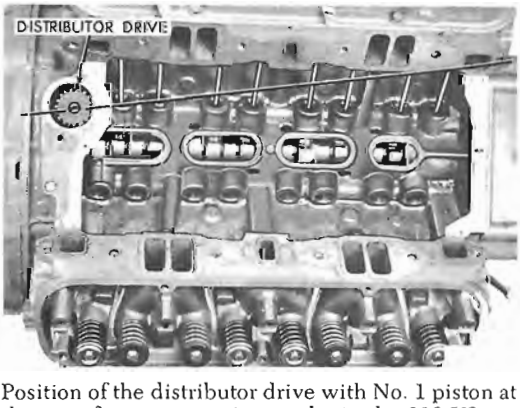

Position of the distributor drive with No. 1 piston at the top of its compression stroke in the 318 V8

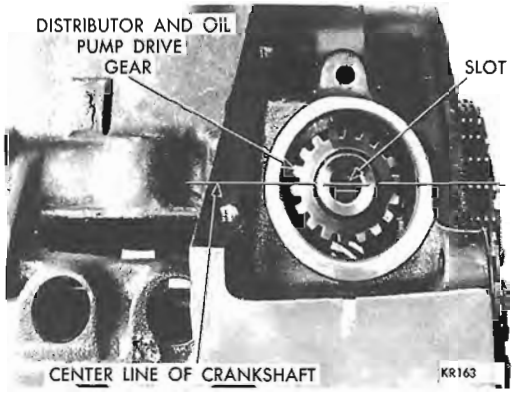

Position of the distributor drive with No. 1 piston at the top of its compression stroke in the 413 and 440 V8s

5. When the distributor is correctly installed, the breaker point contacts should be in such a position that they are just ready to break contact with each other. This is accomplished by rotating the distributor body after it has been installed in the engine.

6. Install the spark plug into the No. 1 cylinder spark plug hole and continue from Step 3 of the distributor installation procedure for engines that have not been disturbed.

ALTERNATOR

Four alternators have been used on Dodge motor home chassis since 1968. They are as follows: a grounded rotor alternator with an electro-mechanical voltage regulator with an output of 46 or 60 amperes used on 1969 and prior chassis; and two versions of an isolated field alternator with an electronic voltage regulator, both with an output of 60 amperes, used since 1970.

A plus or minus 3 amp tolerance in the

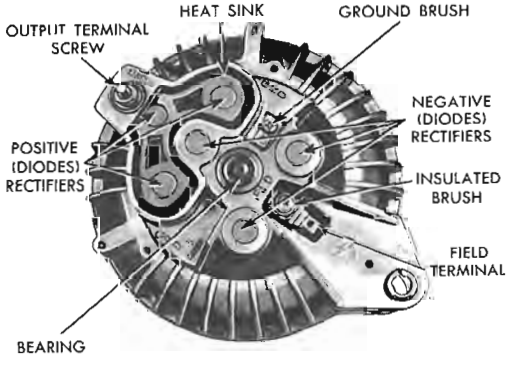

The grounded rotor type alternator

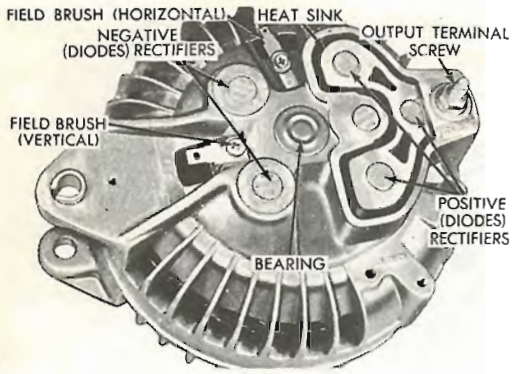

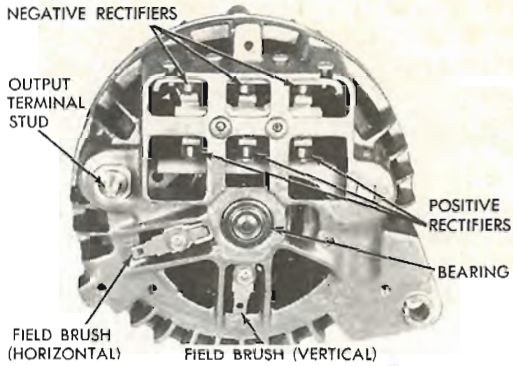

Left, the isolated field type alternator used prior to September 1, 1971; *Right,* the isolated field type alternator used after September 1, 1971

current output rating should be provided to allow for variation in temperature. Current output is measured at 1250 engine rpm and 15 volts at the alternator. If the output is measured at the battery, current output will be about 5 amps less than mentioned above.

The alternator is fundamentally an AC generator, with 6 built-in silicon rectifiers, that convert AC current into DC current. DC current, available at the "output" or "BAT" terminal, is used to charge the battery and power the rest of the electrical system. The alternator charging system is a negative (−) ground system which consists of an alternator, regulator, a charge indicator, storage battery and wiring connecting the components.

Alternator Precautions

To prevent damage to the alternator and regulator, the following precautionary measures must be taken when working with the electrical system.

1. Never reverse the battery connections. Always check the battery polarity visually. This should be done before any connections are made to be sure that all of the connections correspond to the battery ground polarity of the motor home.
2. Booster batteries for starting must be connected properly. Make sure that the positive cable of the booster battery is connected to the positive terminal of the battery that is getting the boost. The same applies to the negative cables.
3. Disconnect the battery cables before using a fast charger; the charger has a tendency to force current through the diodes in the opposite direction for which they were designed. This burns out the diodes.
4. Never use a fast charger as a booster for starting the vehicle.
5. Never disconnect the voltage regular while the engine is running.
6. Do not ground the alternator output terminal.
7. Do not operate the alternator on an open circuit with the field energized.
8. Do not attempt to polarize an alternator.

Removal and Installation

1. Remove the engine cover.
2. Disconnect the positive battery cable.

NOTE: *It may be easier to gain access to the mounting bolts from under the vehicle.*

3. Disconnect the alternator output lead from the BAT terminal, field lead from the FLD terminal and the alternator ground wire.
4. Loosen the alternator mounting bracket, remove the mounting screws and lift the alternator out of the motor home.
5. Install the alternator in the reverse order of removal.

Belt Tension Adjustment

The alternator is driven by a belt located around the crankshaft pulley and the water pump/fan pulley. If the belt is sufficiently loose, it will slip and the alternator will not be able to produce its rated current output. Also, if the other of the two belts (power steering belt) is loose, the water pump will not operate efficiently and the engine could overheat.

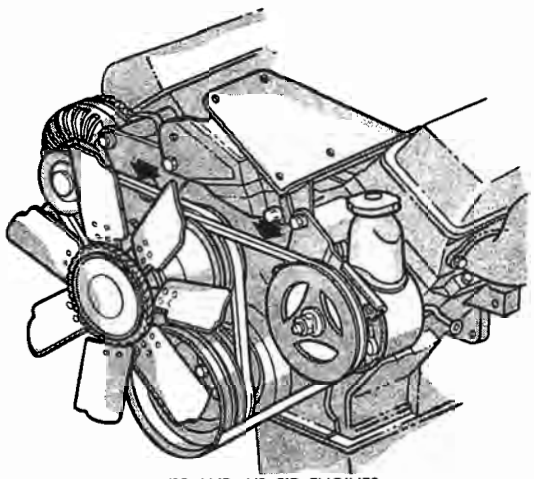

413 AND 440 CID ENGINES

Drive belt tension check (arrows)

Check the belt tension by measuring the deflection of the belts at the midpoint between the water pump pulley and the driven accessory under a 10 lb push or pull. The deflection of the belts should be ¼–5/16 in.

To adjust the alternator drive belts, loosen all the mounting bolts on the alternator. Carefully use a bar to apply tension on the alternator housing and belts.

CAUTION: *Do not apply pressure to either of the ends of the alternator housing, as the metal there is cast aluminum and could break. Apply tension only to the center section of the alternator housing at the stator support.*

Tighten the mounting bolts and check the belt tension.

NOTE: *To adjust the power steering pump drive belt, use a ½ in. drive ratchet with an extension, inserted into the square hole provided in the pump housing brackets.*

REGULATOR

The electro-mechanical alternator regulator installed on motor homes made prior to 1970 regulates the charging system's rate of charge and compensates for seasonal temperature changes. A set of contact points within the regulator actually open and close at varying high rates of speed, depending on the needs of the system, opening and closing the field circuit of the alternator, thus regulating the amount of current received by the battery. The rate at which the contact points open and close is adjustable.

On motor homes made in 1970 and later, an electronic voltage regulator is used which requires no adjustment after it is set internally at the factory.

NOTE: *The components of the charging systems on motor home chassis made in 1969 and prior years are completely incompatible with those on motor home chassis made in 1970 and later. They must not be interchanged.*

Removal and Installation

1. Disconnect the positive terminal of the battery.
2. Disconnect all of the electrical leads at the regulator. Label them as removed,

Alternator and Regulator Specifications

		Alternator		Regulator					
				Field Relay			Regulator		
Year	Model	Field Current Draw (amps)	Output @ 6500 Alternator rpm (amps)	Air Gap (in.)	Point Gap (in.)	Volts to Close	Air Gap (in.)	Point Gap (in.)	Volts at 1250 rpm
1969 and Prior	Chrysler	2.38–2.75	46 or 60	—	—	—	0.32–0.42	0.014 ± 0.004	12
1969 to Sept. 1, 1971	Chrysler	2.38–2.75	60 ± 3	Electronic					
After Sept. 1, 1971	Chrysler	2.50–3.10	60 ± 3	Electronic					

so that you can replace them in the correct order on the replacement unit.

3. Remove all of the hold-down screws, then remove the unit from the vehicle.

4. Install the new voltage regulator using the hold-down screws from the old one, or new ones if they are provided with the replacement regulator. Tighten the hold-down screws.

5. Connect all the leads to the new regulator. Connect the positive battery terminal.

TESTING THE ALTERNATOR AND REGULATOR

The first step in diagnosing charging system trouble is to locate the source.

Battery and Cables

Check the state of charge of the battery and the condition of the cables and terminals. If the battery is low, have it charged or, if it is defective, replace it. Clean the battery terminals and check the condition of the cables. If they are cracked or frayed, replace them.

Alternator Belt

Check the alternator drive belt and replace it if it is stretched or frayed. Check the belt for proper tension.

Wires

Check the condition of all wires and replace those that are cracked, burned, or corroded. Tighten all connections and clean them if they are corroded.

Alternator-Regulator Isolation Test

NOTE: *This test is only valid for those vehicles which use external, adjustable regulators. It is not valid for transistorized regulators.*

Alternator output is controlled by the amount of current supplied to the field circuit of the unit.

Unlike the DC generator, an alternator is capable of producing substantial current at idle speed. Higher maximum output is also a possibility. This presents a potential danger when testing. As a precaution, a field rheostat should be used in the field circuit when making the following isolation test. The field rheostat permits positive control of the amount of current allowed to pass through the field circuit during the isolation test. Unregulated alternator capacity could ruin the unit.

CAUTION: *Before attempting the isolation test, disconnect the field wire from the regulator. Failure to take this precaution can cause instant burning and permanent damage to the regulator.*

1. Connect the voltmeter leads to two prods driven into the battery posts.

2. Disconnect the field wire from the FLD terminal of the voltage regulator.

3. Connect one lead of a field rheostat to the undisturbed IGN terminal of the regulator and the other field rheostat lead to the wire that was removed from the FLD terminal of the regulator.

4. With the field rheostat turned to the low side of the scale (high resistance), start the engine and adjust the throttle to about 2,000 rpm.

5. Slowly move the field rheostat control knob to decrease resistance (allowing more current to flow through the field circuit) until the voltmeter reading slightly exceeds the manufacturers' specifications.

NOTE: *Under load conditions, observe the alternator for arcing or any other evidence of malfunction.*

6. If the alternator performs satisfactorily, adjust or replace the regulator. Conversely, if the voltmeter reading is zero, or below specifications, replace the alternator.

Voltage Adjustment

The specifications in the "Alternator and Regulator Specifications" chart indicate a tolerance of 1 volt from the high setting to the low setting at 70°F (13.5–14.5).

Normally, when the voltage regulator is suspected of being the cause of a vehicle charging system problem, the procedure is to remove the old unit and replace it with a new or reconditioned regulator. However, since the Essex voltage regulator used on Dodge motor home chassis made in 1969 and prior years is adjustable, it is advisable to perform the adjustments before removing the old unit. If the problem cannot be corrected easily by adjusting the voltage regulator, and no other possible causes of the problem can be found, the old regulator should then

be replaced. In addition, adjustment procedures can be used when installing a new regulator to check to be sure that the voltage setting is correct.

NOTE: *Do not remove the regulator or the regulator cover to make the voltage adjustment. The stop in the regulator cover will limit the voltage adjustment range and the voltage adjusting screw should not be forced beyond this point.*

1. With a voltmeter connected to the "IGN" terminal of the regulator, adjust the lower contact voltage setting as necessary by turning the adjustment screw clockwise to increase the voltage or counterclockwise to decrease the voltage.

If Step 1 does not bring the voltage regulator within specifications, proceed with Step 2.

2. Remove the regulator cover and measure the upper contact point gap with a wire gauge. The point gap should be 0.014 ± 0.004 in. Adjust the upper contact gap as necessary by bending the armature upper contact bracket, making sure that the contacts are in alignment. If the upper contact gap is correct and a difference of 0.2–0.7 volts exists between the upper and lower points, adjust the air gap as follows.

3. If the difference is above 0.7 volts, reduce the air gap by bending down the fixed contact bracket; if the difference is below 0.2 volts, increase the air gap by bending the fixed contact bracket up.

4. Connect a small dry cell test lamp in series with the IGN and FLD terminals of the voltage regulator. Insert a 0.032 in. wire gauge between the regulator armature and the core of the voltage coil next to the stop on the armature. Press down on the armature until the armature contacts the wire gauge. The lower contacts should just open and the test lamp should be dim.

With the air gap adjusted, a 0.042 in. wire gauge cannot be inserted between the armature and voltage core.

5. Before installing the cover screws, make sure that the rubber grommet is engaged over the voltage adjustment screw.

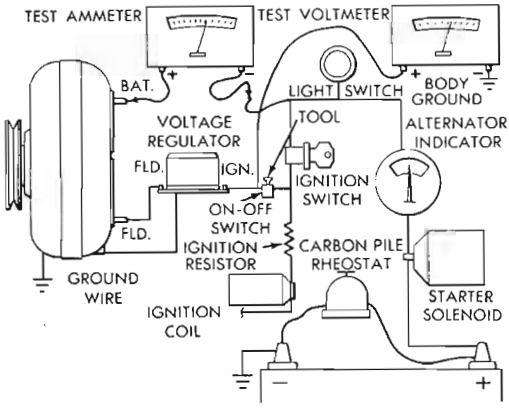

Ammeter and voltmeter connected into the charging circuit for testing the voltage regulator (electromechanical)

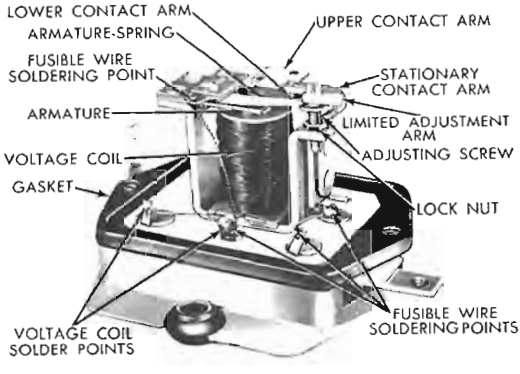

The electro-mechanical voltage regulator with the cover removed

Electronic Voltage Regulator Test

1. Clean the battery terminals and check the specific gravity of the battery. It should be above 1.200 to allow a prompt regulated voltage check.

2. If it is below 1.200, use another battery and do not leave the discharged battery in the circuit.

3. Connect the positive lead of a voltmeter to the ignition No. 1 terminal of the ballast resistor (the one with one or two blue wires, connected to it). The other end, ignition No. 2 terminal, will have a brown and blue or just a brown wire connected to it.

4. Connect the negative lead of the voltmeter to a good chassis ground.

5. Start the engine and operate it at 1250 rpm, with all lights and accessories off. The regulator is functioning properly if the voltmeter readings are in accordance with the following chart.

It is normal for the motor home ammeter to show an immediate charge and then gradually return to normal. The duration of the charge depends on the

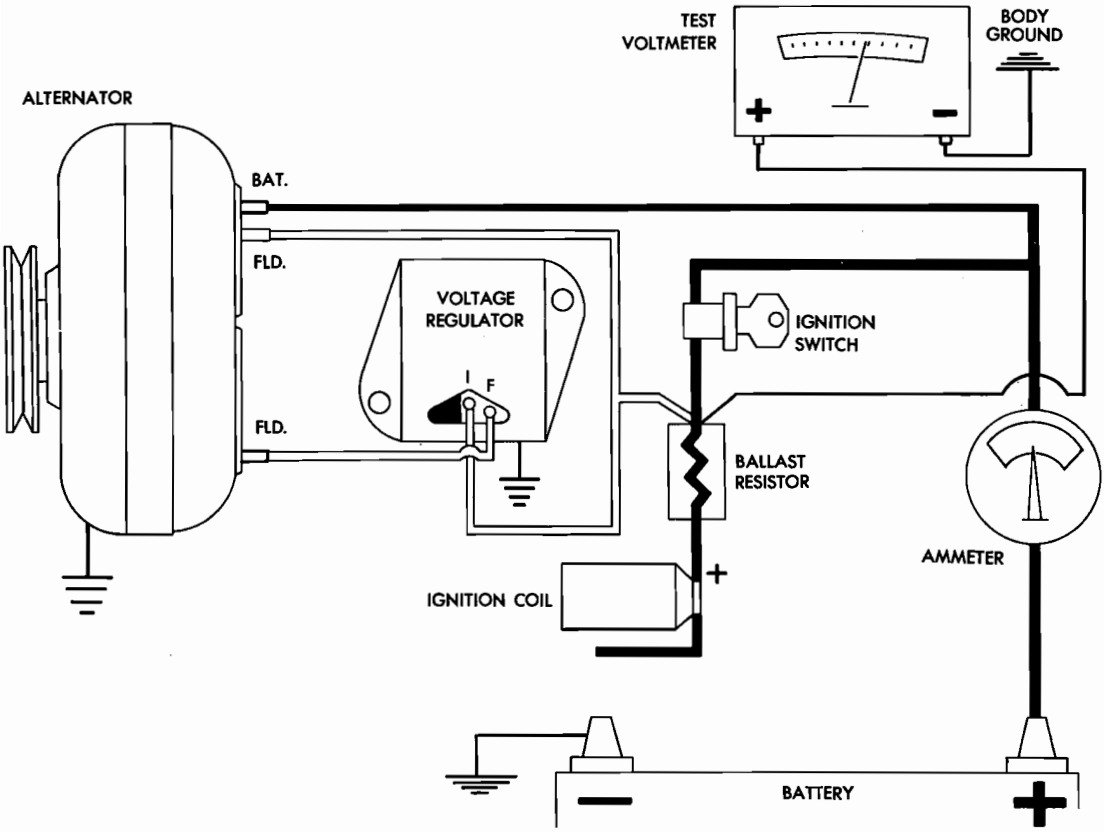

A voltmeter connected into the charging circuit for checking the electronic voltage regulator

Ambient Temperature Near the Regulator	*Voltage Range*
—20° F	14.3–15.3
80° F	13.8–14.4
140° F	13.3–14.0
Above 140° F	Less than 13.8

length of time the engine was cranked before it started.

6. If the voltage is below the limits in the chart, proceed as follows:

a. Check for a good voltage regulator ground.

b. Turn the ignition switch off and disconnect the voltage regulator connector. Be sure that the terminals have not spread apart, causing an open or intermittent connection.

c. Turn the ignition switch on, but do not start the engine. Check for battery voltage at the wiring harness connector (blue and green leads). Turn the ignition switch off. If voltage is not present at either lead, the problem is in the vehicle wiring or the alternator field circuit.

NOTE: *Do not distort the terminals with the voltmeter probe.*

d. If the previous Steps (6a, b and c) test satisfactorily, replace the voltage regulator and repeat Steps 5 and 6.

7. If the voltage is slightly over the limits shown in the chart or is fluctuating, proceed as follows:

a. Check the voltage regulator ground.

b. Check the ground connection between the vehicle body and engine.

c. Check the ignition switch circuit between the battery terminal and the voltage regulator.

8. If the voltage is more than ½ volt above the limits in the chart, replace the voltage regulator and repeat Steps 5 and 6.

9. Remove the voltmeter.

STARTER

The starter used in Dodge chassis is a reduction gear starter. The starter has a 3.5:1 reduction gear ratio built into the starter assembly which is housed in an aluminum die casting.

The starter system consists of two separate circuits; the supply circuit which supplies heavy current to power the starter motor and the control circuit which controls the starter solenoid.

The function of each circuit can be directly related to a basic starter system failure in the following manner: If the starter motor runs too slowly, the supply circuit is at fault. If the starter does not respond at all, but all the other electrical accessories function properly, the starter control circuit is where the problem lies.

Removal and Installation

1. Disconnect the ground (−) cable at the battery.
2. From under the vehicle, remove the cable at the starter.
3. Disconnect the solenoid lead wires at the solenoid terminals.
4. Remove one stud nut and one bolt attaching the starter to the flywheel housing, slide the automatic transmission oil cooler tube bracket off the stud and remove the starter.

NOTE: *Try not to damage the cylinder block seal.*

5. Install the starter in the reverse order of removal, making sure that the contact mounting surfaces are clean to insure good electrical contact.

Starter Drive Replacement

1. Remove the starter from the vehicle.
2. Remove the two through-bolts and the starter end head assembly.

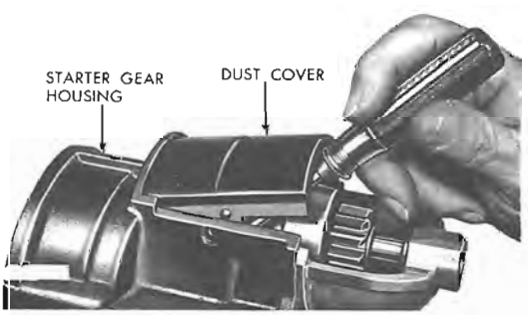

Removing the dust cover from the gear housing

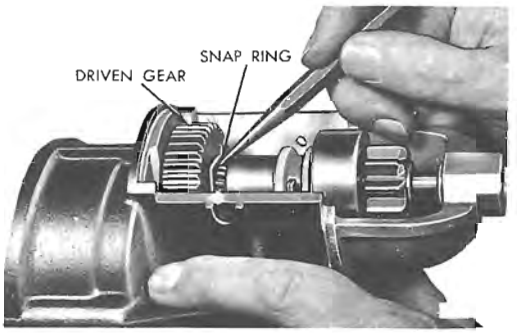

Removing the driven gear snap-ring

3. Remove the dust cover from the gear housing.
4. Release the retainer clip which positions the driven gear on the pinion shaft.

CAUTION: *The retainer is under tension and a cloth should be placed over the retainer to prevent it from springing away after removal.*

5. Release the retainer ring at the front of the pinion shaft. Do not spread the retainer ring any amount greater than the outside diameter of the pinion shaft.

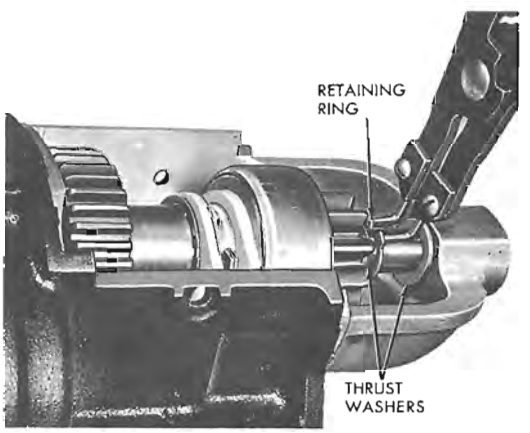

Removing the pinion shaft retainer ring

6. Push the pinion shaft toward the rear of the housing and remove the retainer ring and thrust washers, clutch and pinion assembly, with the two shift fork nylon actuators as an assembly.

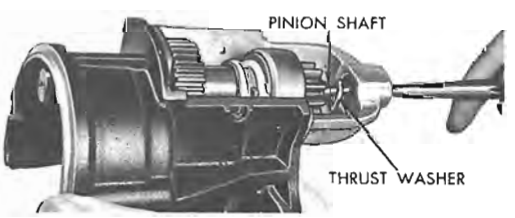

Removing the pinion shaft

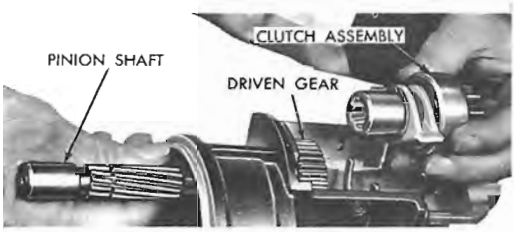

Removing the clutch assembly

Do not immerse the starter clutch unit in any type of cleaning fluid. The starter clutch is pre-lubricated at the factory and any solvent will wash the lubricant from the clutch.

The starter clutch outer housing and pinion gear may be cleaned with a cloth moistened with a cleaning solvent and wiped dry with a clean dry cloth.

Rotate the pinion. The pinion gear should rotate smoothly, but not necessarily easily, in one direction, but should not rotate in the opposite direction. If the starter clutch unit does not function properly, or the pinion is worn, chipped or burred, replace the starter clutch unit.

7. Install the clutch assembly in the reverse order of removal and assemble and replace the starter in the vehicle.

Engine Mechanical

DESIGN

All of the engines used in Dodge motor home chassis are of the V8, valve-in-head design, with hydraulic lifters. The engines vary in compression ratio as follows: 318—7.80:1; 413—7.50:1; 440—8.12:1. All of the engines are designed to operate on regular or low-lead fuel. The 318 has a two-barrel carburetor and the 413 and 440 each have one four-barrel carburetor.

Valve Specifications

Engine Displacement (cu in.)	Seat and Face Angle (deg)	Spring Test Pressure (lbs @ in.)	Spring Installed Height (in.)	Stem-to-Guide Clearance Intake and Exhaust (in.)	Stem Diameter (in.)	
					Intake	Exhaust
8-318	45	①	②	0.017	0.372–0.373	0.371–0.372
8-413	45	③	④	0.017	0.3718–0.3725	0.433–0.434
8-440	45	⑤	⑥	0.017	0.3718–0.3725	0.371–0.372

① Intake—78–88 @ $1\frac{11}{16}$; Exhaust—80–90 @ $1\frac{31}{64}$
② Free length: Intake—2.00; Exhaust—$1\frac{13}{16}$
③ Intake—75–85 @ $1\frac{55}{64}$; Exhaust—80–90 @ $1\frac{47}{64}$
④ Free length: Intake—$2\frac{5}{16}$; Exhaust—$2\frac{1}{8}$
⑤ Intake—121–129 @ $1\frac{55}{64}$; Exhaust—118–128 @ $1\frac{47}{64}$
⑥ Free length: Intake—$2\frac{37}{64}$; Exhaust—$2\frac{23}{64}$

General Engine Specifications

Engine Displacement (cu in.)	Carb Type①	Bore and Stroke (in.)	Advertised Compression Ratio	Oil Pressure @ 2000 rpm
8-318	2-bbl	3.910 x 3.312	7.8 : 1	30–80
8-413	4-bbl	4.188 x 3.750	7.5 : 1	30–80
8-440	4-bbl	4.3215 x 3.750	8.12 : 1	30–80

① Advertised horsepower and advertised torque are not available

Piston Clearance

Engine Displacement (cu in.)	Land Clearance at Top of Skirt (in.)	
	Min.	Max.
8-318	0.0005	0.0015
8-413	0.0005	0.0015
8-440	0.0003	0.0013

Ring Side Clearance

Engine Displacement (cu in.)	Top and Bottom Compression (in.) Min.	Top and Bottom Compression (in.) Max.	Oil Control (in.) Min.	Oil Control (in.) Max.
8-318	0.0015	0.0030	0.0002	0.0050
8-413	0.0025	0.0040	0.0010	0.0030
8-440	0.0015	0.0030	0.0000	0.0050

Torque Specifications

(All figures in ft lbs unless noted)

Engine Displacement (cu in.) ② ③	Cylinder Head Bolts	Crankshaft Pulley Bolts	Manifold Intake	Manifold Exhaust
8-318	85	200①	35	15
8-413	70	30	45	40
8-440	70	30	45	30

① Figure represents inch pounds
② Rod bearing bolts are 45 ft lbs and main bearing bolts are 85 ft lbs in all engines
③ Torque converter-to-crankshaft bolts are 55 ft lbs in all engines

Ring Gaps

Engine Displacement (cu in.)	Top and Bottom Compression (in.) Min.	Top and Bottom Compression (in.) Max.	Oil Control (in.) Min.	Oil Control (in.) Max.
8-318	0.010	0.020	0.015	0.055
8-413	0.013	0.023	0.015	0.055
8-440	0.013	0.023	0.015	0.055

Crankshaft and Connecting Rod Specifications

(All measurements given in in.)

Engine Displacement (cu in.)	Crankshaft: Main Brg Journal Dia	Crankshaft: Main Brg Oil Clearance	Crankshaft: Shaft End-Play	Crankshaft: Thrust on No.	Connecting Rod: Journal Dia	Connecting Rod: Oil Clearance	Connecting Rod: Side Clearance
8-318	2.4995–2.5005	0.001–0.002	0.002–0.007	3	2.1235–2.1245	0.001–0.002	0.006–0.014
8-413	2.7495–2.7505	0.0015–0.0025	0.002–0.007	3	2.374–2.375	0.001–0.002	0.009–0.017
8-440	2.7495–2.7505	0.0005–0.0020	0.002–0.007	3	2.374–2.375	0.001–0.0025	0.009–0.017

Battery and Starter Specifications

Battery: Amp Hour Capacity	Battery: Volts	Battery: Ground	Starter: Lock Test Amps	Starter: Lock Test Volts	Starter: Lock Test Torque (ft lbs)	Starter: No Load Test Amps	Starter: No Load Test Volts	Starter: No Load Test RPM	Starter: Brush Spring Tension (oz)
70①	12	Neg	400–450	4	N.A.	90	11	1925–2600	32–36

N.A. Not available
① 90 amp optional

Removal and Installation

Winnebago, the coach builder, recommends that the engine be removed from beneath the vehicle. Dodge, the chassis builder, recommends that the engine be removed through the front of the vehicle. We recommend that the removal of the complete engine assembly not be attempted by the owner, since the procedure involves the use of special heavy-duty equipment (i.e., hydro-crane hoist, two-post truck hoist, heavy-duty transmission jack). The engine should only be removed at a facility equipped to handle such an undertaking and by experienced personnel.

However, it is possible to remove major components from the engine while it is still mounted in the vehicle without too much trouble.

CYLINDER HEAD

Removal

1. Drain the cooling system and disconnect the battery ground cable.
2. Remove the alternator, carburetor air cleaner and fuel line at the carburetor.
3. Disconnect the accelerator linkage.
4. Remove the vacuum control hose between the carburetor and the distributor.
5. Remove the distributor cap and wires.
6. Disconnect the coil wires, heat indicator sending unit wire, heater hoses and the by-pass hose.
7. Remove the closed positive crankcase ventilation system, evaporative control system and the valve covers.
8. Remove the controlled water by-pass tube between the water pump and the intake manifold.
9. Remove the intake manifold, ignition coil and the carburetor as one assembly. Remove the tappet chamber cover on the 413 and 440 engines.
10. Remove the exhaust manifolds.
11. Remove the rocker arm and shaft assemblies. Remove the pushrods and identify them so that they can be reinstalled in their original locations.

NOTE: *The pushrods must be reinstalled in their original locations.*

12. Remove the 10 head bolts from each cylinder head and remove the cylinder head(s). On the 413 engine, tag the center bolts for replacement in their original holes.

Installation

1. Clean all the mating surfaces of the cylinder heads and the intake manifold.
2. Coat the new cylinder head gaskets with a non-hardening sealer and place them in position on the cylinder block.
3. Install the cylinder head bolts. Starting at the top center, tighten all the cylinder head bolts to 50 ft lbs in the proper sequence on the 318. Then, retighten all the cylinder head bolts in the same sequence to 95 ft lbs on the 318. On the 413 and 440, tighten the head bolts to 40 ft lbs first, then, to 70 ft lbs.

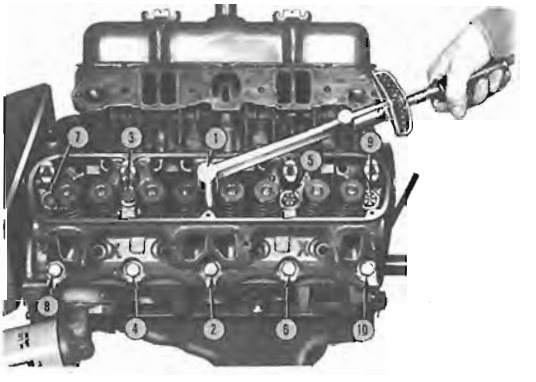

The cylinder head tightening sequence for the 318 V8

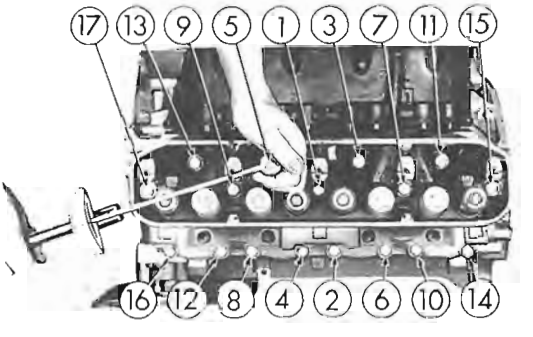

The cylinder head tightening sequence for the 413 and 440 V8s

4. Install the pushrods, rocker arm and shaft assemblies. Make sure that the "NOTCH" on the end of the rocker shaft is pointing to the centerline of the engine and toward the front of the engine on the

left bank and to the rear of the engine on the right bank. Make sure to install the long, stamped-steel retainers in the Nos. 2 and 4 positions and tighten to 200 in. lbs.

5. Cement the intake manifold gasket seals to the block rails at the front and rear of the block. The center hole in the seals must engage the dowel and end holes and lock in the tangs of the head gasket.

6. Place a large drop (¼ in. dia.) of rubber sealer into each corner between the cylinder head gasket tabs.

7. Coat both sides of the intake manifold gaskets lightly with a non-hardening sealer and place them in position on the cylinder heads. Install the tappet chamber cover on the 413 and 440 engines.

8. Carefully lower the intake manifold into position on the cylinder block and heads. When the intake manifold is lowered onto the top of the engine, all of the gasket surfaces should make contact at the same time. After the manifold is in place, inspect to make sure that the end seals are still in place.

9. Install the 12 attaching capscrews in the intake manifold and tighten them only finger-tight. Next, tighten the capscrews to 25 ft lbs in the proper sequence. Then, retighten the capscrews to 40 ft lbs on the 318 and 45 ft lbs on the 413 and 440 engines, in the same sequence.

10. Install the exhaust manifolds with new gaskets, and tighten the attaching bolts to 15 ft lbs.

11. Install the spark plugs, coil wires, heat indicator sending unit wire, heater hoses. Connect the vacuum hose between the carburetor and distributor.

12. Install the throttle linkage and adjust it.

13. Install the distributor cap and wires, fuel lines and alternator drive belt. Adjust the tension on the alternator drive belt.

14. Use new gaskets on the valve covers and install the valve covers. Tighten the attaching screws to 14 in. lbs.

15. Install the crankcase ventilation system and the evaporative emission system.

16. Fill the cooling system and install the battery.

ROCKER ARMS AND SHAFTS

Removal and Installation

1. On the 318 engine, disconnect the spark plug wires by pulling the boot straight out in line with the plug.

2. Disconnect the closed crankcase ventilation system and the evaporative control system from the valve cover.

3. Remove the valve cover and gasket.

4. Remove the rocker shaft retaining bolts and retainers and lift the rocker arms and shaft assembly from the cylinder head.

5. If the rocker shaft assembly is to be disassembled for cleaning and inspection, disassemble in sequence and identify the components so that they can be reassembled in the same positions from which they are removed.

6. Assemble and install the rocker shaft assembly in the reverse order of removal.

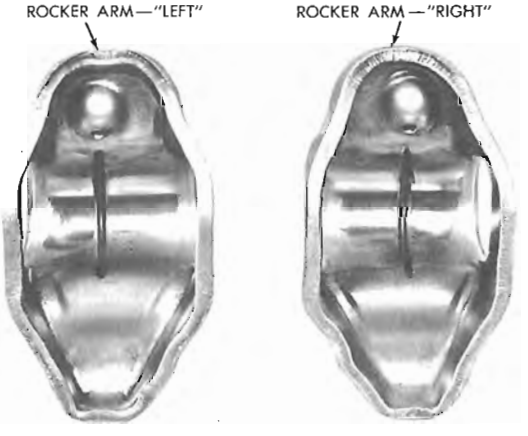

Identification of the 318 V8 rocker arms

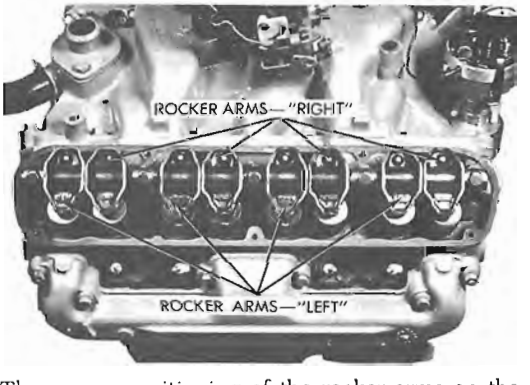

The proper positioning of the rocker arms on the shaft and installed on the engine

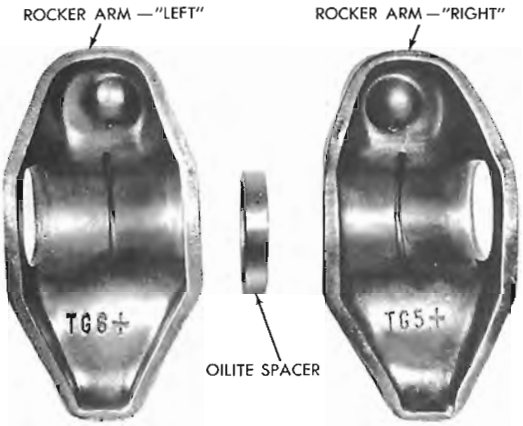

Identification of the 413 and 440 V8 rocker arms

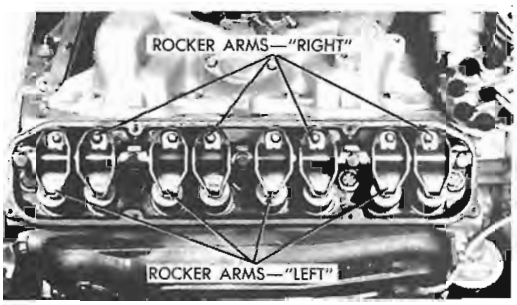

Proper positioning of the rocker arms on their shaft and installed on the 413 and 440 V8 engines

INTAKE MANIFOLD

Removal and Installation

1. Drain the cooling system and disconnect the battery ground cable.
2. Remove the alternator, carburetor air cleaner and fuel line at the carburetor.
3. Disconnect the accelerator linkage.
4. Remove the vacuum control hose between the carburetor and the distributor.
5. Remove the distributor cap and wires.
6. Disconnect the coil wires, heat indicator sending unit wire, heater hoses and the by-pass hose.
7. Remove the closed crankcase ventilation system, evaporative control system and the valve covers.
8. Remove the controlled water by-pass tube between the water pump and the intake manifold.
9. Remove the intake manifold, ignition coil and the carburetor as one assembly. Remove the tappet chamber cover on the 413 and 440 engines.
10. Install the intake manifold in the reverse order of removal. Torque the intake manifold attaching bolts in the proper sequence, in 2 steps, to the proper torque (40 ft lbs on the 318; 45 ft lbs on the 413 and 440).

NOTE: *There are only 4 attaching bolts for the 413 and 440 intake manifolds. Use the same sequence as for the 318 V8.*

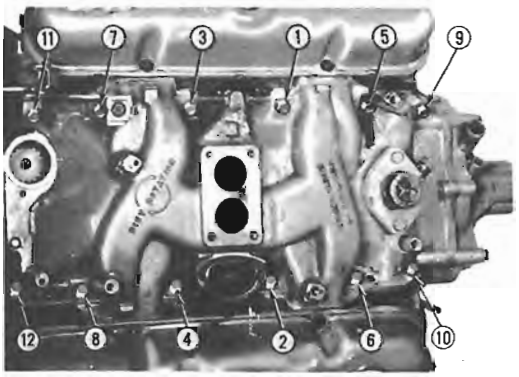

The 318 V8 intake manifold tightening sequence

EXHAUST MANIFOLD

Removal and Installation

1. From under the vehicle, remove the bolts and nuts attaching the exhaust pipes to the manifolds.
2. Remove the bolts, nuts and washers attaching the manifold to the cylinder head. Remove the manifold(s) from the cylinder head(s).

NOTE: *If the end studs came out with the nuts, install new studs, applying sealer to the coarse thread ends. If this precaution is not taken, coolant leaks may develop at the studs.*

3. Position the two outboard arms of the manifold on the two studs on the cylinder head. Install the conical washers and nuts on the studs.
4. Install the two screws and conical washers at the inner ends of the outboard arms of the manifold. Install the two screws without the washers on the center arm of the manifold.
5. Tighten the screws and nuts, starting at the center and working outward, to 20 ft lbs.
6. Connect the exhaust pipes to the manifolds and secure them with the attaching nuts, bolts and washers. Tighten the nuts to 25 ft lbs on the 318 and to 50 ft lbs on the 413 and 440.

TIMING CHAIN COVER

Removal and Installation

NOTE: *In order to gain access to the front of the engine, it is necessary to remove the grille of the motor home.*

1. Drain the cooling system.
2. Remove the radiator and water pump.
3. Remove the power steering pump. Do not disconnect the fluid lines from the pump; disconnect the pump from the engine and position it out of the way.
4. Remove the pulley from the vibration damper and bolt and washer securing the vibration damper on the crankshaft.
5. Use a puller to remove the crankshaft vibration damper from the crankshaft.
6. Remove the fuel lines and the fuel pump.
7. Loosen the oil pan bolts and remove the front bolt at each side.
8. Remove the timing chain case cover and the gasket using extreme caution to avoid damaging the oil pan gasket.
9. Before installing the cover, be sure that the mating surfaces of the cover and the cylinder block are clean.
10. With a new gasket in place, carefully install the chain case cover to avoid damaging the oil pan gasket. Tighten the cover capscrews to 30 ft lbs. Tighten the oil pan capscrews to 200 in. lbs.
11. Lubricate the seal lip with Lubriplate®, position the vibration damper hub slot on the key in the crankshaft, and slide the damper on the crankshaft. Press the damper onto the crankshaft.
12. Install the vibration damper retainer bolt with its washer and tighten the nut to 135 ft lbs.
13. Position the pulley on the vibration damper and attach it with the bolts and lockwashers.
14. Install the fuel pump and fuel lines.
15. Install the water pump and housing assembly, using new gaskets.
16. Install the power steering pump.
17. Install the radiator, fan and belt, hoses and close the drains.
18. Fill the cooling system.
19. Assemble the grille to the front of the motor home.

NOTE: *If the oil pan gasket is damaged during removal, it is possible to cut the damaged exposed section of the oil pan gasket from the mounting flange of the oil pan flush with the front of the engine block and replace it with the same section cut from a new oil pan gasket.*

Timing Gear Cover Oil Seal Replacement

1. Remove the timing gear cover.
2. Drive out the old seal with a pin punch from the front of the cover. Be careful not to damage the seal mounting boss.
3. Clean out the recess in the cover and the mounting surfaces of the cover and the block.
4. Coat the new seal with grease and drive it into place in the cover until it is fully seated. Be careful not to damage the seal. Check the seal to make sure that it is seated fully and evenly.
5. Install the timing chain (gear) cover onto the engine.

TIMING CHAIN

Removal and Installation

1. Remove the timing case cover and the crankshaft front oil slinger.
2. With a socket wrench of the proper size on the crankshaft pulley bolt, gently rotate the crankshaft in a clockwise direction until all slack is removed from the left-side of the timing chain. Scribe a mark on the engine block parallel to the

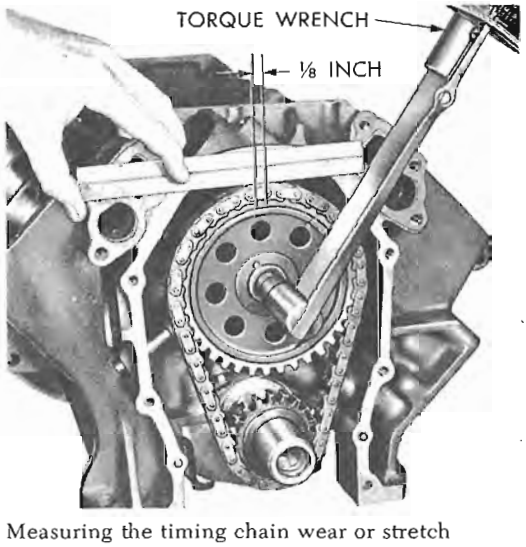

Measuring the timing chain wear or stretch

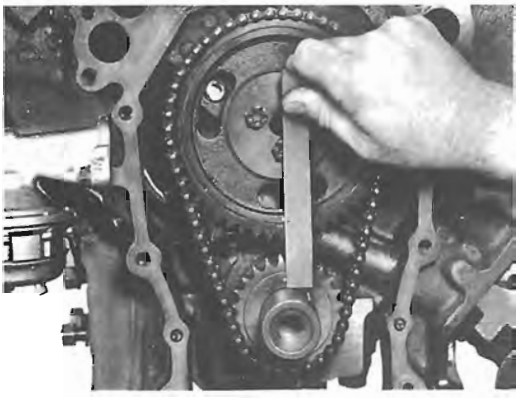

Alignment of the crankshaft and camshaft sprockets timing marks on the 413 and 440 V8s

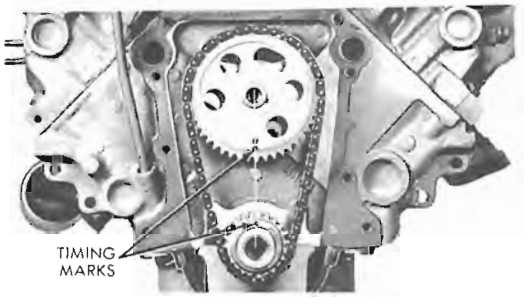

Alignment of the crankshaft and camshaft sprockets timing marks on the 318 V8

present position of the left-side of the chain. Next, turn the crankshaft in a counterclockwise direction to remove all slack from the right-side of the chain. Force the left-side of the chain outward with the fingers and measure the distance between the reference point and the present position of the chain. If the distance is more than ⅛ in., replace the chain and/or the sprockets.

3. Crank the engine until the timing marks are aligned.

4. Remove the camshaft sprocket capscrew, washers and fuel pump eccentric. Slide both sprockets and the timing chain forward and remove them as an assembly.

5. Install the sprockets and chain in the reverse order of removal, making sure that when they are positioned onto the camshaft and crankshaft, the timing marks are aligned.

TIMING GEARS (EARLY 413 V8)

Removal and Installation

1. Remove the timing gear cover.

2. Slide the crankshaft oil slinger off the end of the crankshaft.

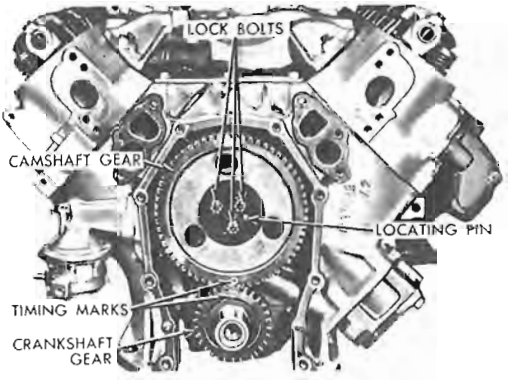

Alignment of the crankshaft and camshaft gears timing marks on the early 413 V8

3. Align the timing marks on the camshaft and crankshaft gears.

4. Remove the camshaft gear attaching bolts.

5. Remove the camshaft gear and crankshaft gear.

NOTE: *Before disassembly, it can be determined the type of camshaft drive, gear or chain, the 413 V8 is equipped with. If the camshaft is gear-driven, the distributor shaft and rotor rotation is clockwise. If the camshaft is chain-driven, the distributor shaft and rotor turn counterclockwise.*

CAMSHAFT

Removal and Installation

1. Remove the intake manifold, valve covers, timing case cover and the timing chain and sprockets or gears.

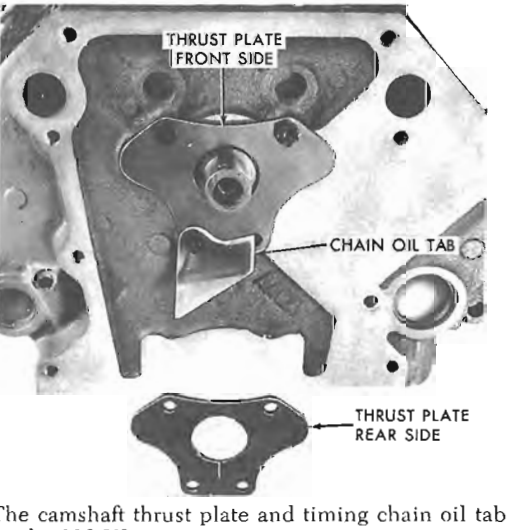

The camshaft thrust plate and timing chain oil tab on the 318 V8

2. Remove the rocker arm and shaft assemblies.

3. Remove the pushrods and tappets, identifying the pushrods and tappets so that each part can be replaced in its original position.

4. Remove the distributor and lift out the oil pump and distributor driveshaft.

5. Remove the camshaft thrust plate on the 318 V8, noting the location of the timing chain oil tab.

6. Install a long bolt in the front of the camshaft to facilitate removal and remove the camshaft being very careful not to damage the cam bearings with the cam lobes.

7. Install the camshaft in the reverse order of removal, lubricating the camshaft before installation and exercising the same amount of caution not to damage the cam bearings with the cam lobes while sliding the camshaft into place. Also, do not push the camshaft in any farther than is necessary so as not to push the welch plug out of the back of the engine. Assemble the engine in the reverse order of disassembly.

PISTONS AND CONNECTING RODS

Removal and Installation

1. Drain the cooling system and the crankcase. Remove the intake manifold, cylinder heads, oil pan and the oil pump.

2. Turn the crankshaft until the piston to be removed is at the bottom of its travel, then place a cloth on the piston head to collect filings. Remove any ridge of deposits at the end of the piston travel from the upper cylinder bore, using a ridge reaming tool. Do not cut into the piston ring travel area more than 1/32 in. when removing the ridge.

3. Make sure that all of the connecting rod bearing caps can be identified, so that they will be reinstalled in their original positions.

4. Turn the crankshaft until the connecting rod that is to be removed is at the bottom of its stroke and remove the connecting rod nuts and bearing cap.

5. Push the connecting rod and piston assembly out the top of the cylinder bore with the wooden end of a hammer handle. Be careful not to damage the crankshaft bearing journal or the cylinder wall when removing the piston and rod assembly.

6. Remove the bearing inserts from the connecting rod and cap if the bearings are to be replaced, and place the cap onto the piston/rod assembly from which it was removed.

7. Before installing the piston/connecting rod assembly, be sure to clean all gasket mating surfaces, oil the pistons, piston rings and the cylinder walls with light engine oil.

8. Assemble the connecting rods to the pistons of the right cylinder bank (2, 4, 6, and 8) with the indent on the piston head opposite the larger chamfer on the large bore end (crankshaft) end of the connecting rod. Assemble the rods to the pistons of the left cylinder bank (1, 3, 5, and 7) with the indent on the piston head on the same side as the large chamfer on the large bore end of the connecting rod. The notch on the top of the piston must be pointing toward the front of the engine.

9. Make sure that the ring gaps are properly spaced around the circumference of the piston. Fit a piston ring compressor around the piston. Turn the crankshaft until the connecting rod journal is on center with the cylinder bore. Slide the piston and connecting rod assembly down into the cylinder bore, pushing it in with the wooden hammer handle. Push the piston down until it is only slightly below the top of the cylinder bore. Guide the connecting rods onto the crankshaft bearing journals carefully, to avoid damaging the crankshaft.

10. Check the bearing clearance of all the rod bearings, fitting them to the crankshaft bearing journals.

11. After the bearings have been fitted, apply a light coating of engine oil to the journals and bearings.

12. Turn the crankshaft until the appropriate bearing journal is at the bottom of its stroke, then push the piston assembly all the way down until the connecting rod bearing seats on the crankshaft journal. Be careful not to allow the bearing capscrews to strike the crankshaft bearing journals and damage them.

13. After the piston and connecting rod assemblies have been installed, check the connecting rod side clearance on each crankshaft journal.

14. Install the oil pan and assemble the engine in the reverse order of disassembly.

Engine Lubrication

OIL PAN

Removal and Installation

To remove the oil pan on the 413 and 440 V8 engines, simply drain the crankcase, remove the oil pan attaching bolts and remove the oil pan from the engine.

To remove the oil pan from the 318 V8 engine:

1. Drain the engine oil. Remove the right and left engine-to-torque converter housing support brackets.
2. Disconnect the exhaust crossover pipe from both manifolds, but leave the pipe attached to the rear exhaust pipe.
3. Remove the oil pan screws, then lower the oil pan.

Clean the oil pan in solvent and wipe it dry with a clean cloth. Clean all gasket material from the mating surfaces of the oil pan and the engine block. Install the oil pans on all the engines in the reverse order of removal, using a new oil pan gasket and tightening the attaching bolts to 200 in. lbs.

REAR MAIN OIL SEAL

Replacement

The rear main bearing upper and lower oil seals installed in all the engines at the factory are rope type seals. Replacement seals, however, are of the split rubber type to make it possible to replace the upper seal without removing the crankshaft. The seals must be used as an upper and lower set and cannot be combined with the rope seal.

NOTE: *A rope seal is supplied in the engine gasket packages for use when the crankshaft is removed and the engine is being rebuilt.*

318 V8

1. With the oil pan and oil pump removed, remove the rear main bearing cap.
2. Remove the lower rope oil seal by prying it from the side with a small screwdriver.
3. Remove the upper rope seal by screwing a self-tapping screw into the end of the seal, being careful not to damage the crankshaft. Pull the seal out by grasping the head of the self-tapping screw with a pair of pliers while rotating the crankshaft in the direction you are pulling the seal.
4. Wipe the crankshaft surface clean and oil it lightly.
5. Oil the rubber replacement seal lightly with engine oil.
6. Hold the seal, with the paint stripe to the rear, tightly against the crankshaft with your thumb to make sure that the sharp edge of the groove in the block does not shave or nick the back of the seal. Install the seal in the block groove. Rotate the crankshaft while sliding the seal into the groove. Care must be exercised not to damage the sealing lip.
7. Install the other half of the seal into the rear main bearing cap, with the paint stripe to the rear.
8. Install the rear main bearing cap and tighten the two cap bolts to 85 ft lbs.

NOTE: *Do not use any type of sealer on the lip ends of the seal.*

9. Install the oil pump and the oil pan.

413 AND 440 V8s

The procedure for replacing the rear main bearing oil seal in these engines is the same as for the 318 V8 engine except that it is not necessary to remove the oil pump.

Another difference between the 318 V8 and the 413 and 440 V8s is that the rear main bearing cap on the 413 and 440 V8s has two side seals that must be replaced when the bearing cap is removed. The procedure for installing the side seals is as follows (removal is obvious):

NOTE: *Perform the following operations as rapidly as possible. These side seals are made of a material that expands quickly when oiled. Failure to pre-oil the seals will result in an oil leak.*

1. Apply mineral spirits or fuel oil to the side seals.
2. Install the seals immediately in the seal retainer grooves.
3. Install the seal retainer and tighten the attaching screws to 25 ft lbs.

OIL PUMP

Removal and Installation

318 V8

1. Remove the oil pan.
2. Remove the bolts attaching the oil

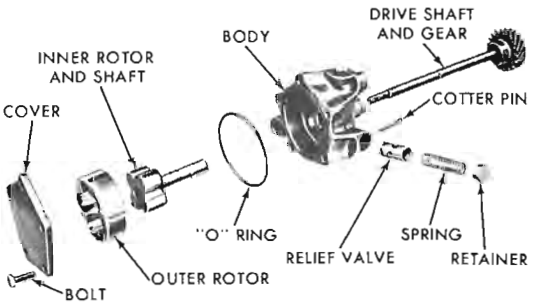

An exploded view of the oil pump installed on the 318 V8

pump to the rear main bearing cap and remove the pump from the engine.

3. Install the pump in the reverse order of removal.

413 AND 440 V8S

1. Remove the oil filter.
2. Remove the oil pump attaching bolts and remove the assembly from the bottom side of the engine.
3. Install the oil pump in the reverse order of removal.

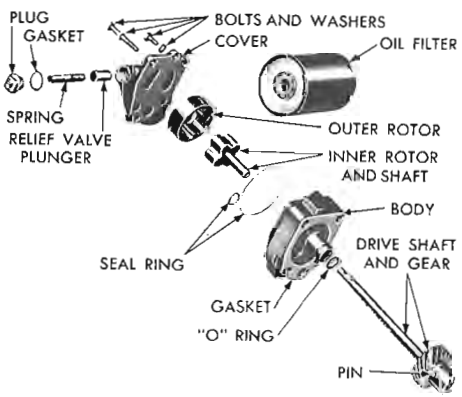

An exploded view of the oil pump installed on the 413 and 440 V8s

Engine Cooling

The satisfactory performance of any engine is controlled to a great extent by the proper operation of the cooling system. The engine block is fully water-jacketed to prevent distortion of the cylinder walls. Directed cooling and water holes in the cylinder head causes water to flow past the valve seats, which are one of the hottest parts of any engine, to carry heat away from the valves and seats.

The minimum temperature of the coolant is controlled by the thermostat, mounted in the coolant outlet passage of the engine. When the coolant temperature is below the temperature rating of the thermostat, the thermostat remains closed and the coolant is directed through the radiator by-pass hose to the water pump and back into the engine. When the coolant temperature reaches the temperature rating of the thermostat, the thermostat opens and allows coolant to flow past it and into the top of the radiator. The radiator dissipates the excess engine heat before the coolant is recirculated through the engine.

The cooling system is pressurized and operating pressure is regulated by the rating of the radiator cap which contains a relief valve. The reason for a pressurized cooling system is to allow for higher engine operating temperatures with a higher coolant boiling point.

FLEX FANS

The purpose of a cooling fan mounted on the water pump driveshaft is to draw cooling air through the radiator core when the vehicle is moving at low speeds or is parked with the engine running. When the vehicle is running at moderate and high speeds, the need for a cooling fan is reduced and as speed increases to 55 mph or so, nearly eliminated. In other words, at speed, a rapidly rotating cooling fan is not really needed, thus power is being wasted to turn it.

The flex fan has been designed to eliminate this wasted effort. As the engine rpm increases, the blades of the flex fan "flatten out," reducing the pitch of the cutting edges exposed to the air, reducing the friction between the air and the blades. As a result, less power is needed to turn the fan. The only possible drawback to a flex fan is the reduced cooling ability of the fan when the engine is operating at a high rpm, but the vehicle is moving at a low speed, such as pulling up a steep hill in low gear. This will have to be considered before installing a flex fan.

COOLANT RESERVE SYSTEM

The coolant reserve system is standard equipment on the RM300, RM350 and RM400 chassis.

As the engine warms and the coolant volume expands, the expansion is taken up by the extra area in the coolant reserve tank. When the engine cools, the volume

of the coolant decreases and the extra coolant in the reserve tank is drawn back into the radiator. The advantage to a coolant reserve system is that when an engine overheats slightly, no coolant is lost through the pressure relief valve in the radiator cap; also, the reserve tank allows for a greater fluctuation of pressure in the cooling system.

RADIATOR

Removal and Installation

Before removing the radiator, it is necessary to gain access to the radiator and radiator hoses by removing the engine cover and the grille plus any other components that restrict the removal of the radiator.

1. Disconnect the negative ground cable from the battery and drain the cooling system.
2. Disconnect the transmission oil cooler lines from the radiator lower tank, and plug the lines to prevent the loss of transmission fluid.
3. Remove the upper and lower radiator hoses, and radiator filler extension.
4. Remove the upper air baffle, both side baffles and the coolant reserve tank.
5. Remove the fan shroud from the radiator and move it rearward over the fan to provide maximum clearance.
6. Remove the mounting screws from the radiator, then remove the radiator from the compartment. Use care when removing the radiator to prevent damaging the cooling fins and radiator water tubes.
7. Reinstall the radiator in the reverse order of removal.

NOTE: *When refilling the cooling system on the 413 V8 engine, open the draincock on the top right-side of the water pump housing. The drain cock must be left open until coolant displaces the air in the system and flows freely. Close the drain cock and fill the radiator to the proper level.*

WATER PUMP

Removal and Installation

1. Remove the radiator.
2. Loosen the power steering pump and alternator. Remove all the drive belts.

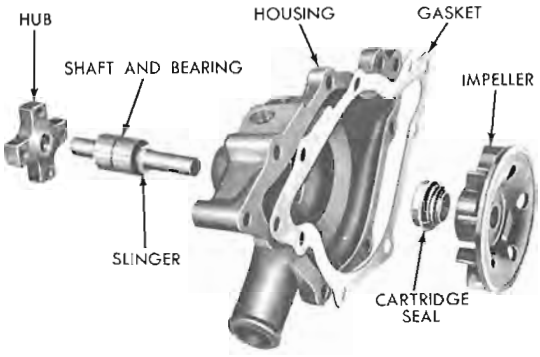

An exploded view of the water pump installed on the 318 V8

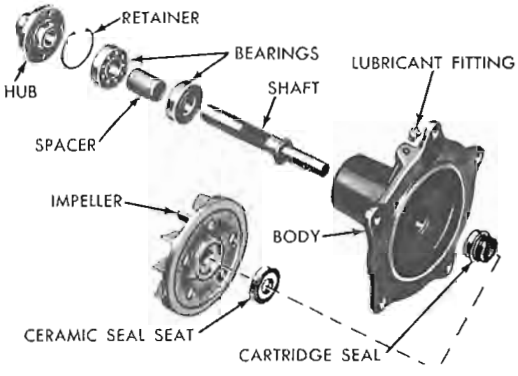

An exploded view of the water pump installed on the 413 and 440 V8s

3. Remove the entire fan asssembly as a unit.
4. Remove the inlet hose, and loosen the by-pass hose clamp on the 318 V8 only.
5. Remove the water pump housing bolts, then remove the pump. Discard the gasket and clean both of the gasket seating surfaces.
6. Install the water pump in the reverse order of removal, using new gaskets coated with sealer.

NOTE: *The water pump on the 440 V8 engine is serviced as an assembly only and cannot be disassembled for service or repair. The water pumps on the 318 and 413 V8 engines, however, can be disassembled and reconditioned when required.*

THERMOSTAT

Removal and Installation

1. Drain the cooling system below the level of the coolant outlet housing. Use the petcock valve at the bottom of the ra-

diator to drain the system, it is not necessary to remove any of the hoses.

2. Remove the coolant outlet housing retaining bolts and slide the housing with the hose attached to one side.

3. Lift the thermostat from the coolant outlet housing.

4. Remove the gasket from the engine and the outlet housing. Clean both mating surfaces.

5. Coat a new gasket with a water-resistant sealer and position it on the outlet of the engine.

6. Install the thermostat with the bridge (opposite end from the spring) facing up with the spring inside the engine.

7. Position the elbow connection onto the mounting surface of the outlet and install the retaining bolts.

8. Fill the radiator.

NOTE: *When refilling the cooling system of the 413 V8 engine, open the draincock on the top right-side of the water pump housing. The draincock must be left open until the coolant displaces the air in the system and flows freely. Close the draincock and fill the radiator to the proper level.*

Engine Rebuilding

This section describes, in detail, the procedures involved in rebuilding a typical engine. The procedures specifically refer to an inline engine, however, they are basically identical to those used in rebuilding engines of nearly all design and configurations. Procedures for servicing atypical engines (i.e., horizontally opposed) are described in the appropriate section, although in most cases, cylinder head reconditioning procedures described in this chapter will apply.

The section is divided into two sections. The first, Cylinder Head Reconditioning, assumes that the cylinder head is removed from the engine, all manifolds are removed, and the cylinder head is on a workbench. The camshaft should be removed from overhead cam cylinder heads. The second section, Cylinder Block Reconditioning, covers the block, pistons, connecting rods and crankshaft. It is assumed that the engine is mounted on a work stand, and the cylinder head and all accessories are removed.

Procedures are identified as follows:

Unmarked—Basic procedures that must be performed in order to successfully complete the rebuilding process.

Starred (*)—Procedures that should be performed to ensure maximum performance and engine life.

Double starred (**)—Procedures that may be performed to increase engine performance and reliability. These procedures are usually reserved for extremely heavy-duty or competition usage.

In many cases, a choice of methods is also provided. Methods are identified in the same manner as procedures. The choice of method for a procedure is at the discretion of the user.

The tools required for the basic rebuilding procedure should, with minor exceptions, be those

TORQUE (ft. lbs.)*

U.S.

Bolt Diameter (inches)	Bolt Grade (SAE) 1 and 2	5	6	8	Wrench Size (inches) Bolt	Nut
1/4	5	7	10	10.5	3/8	7/16
5/16	9	14	19	22	1/2	9/16
3/8	15	25	34	37	9/16	5/8
7/16	24	40	55	60	5/8	3/4
1/2	37	60	85	92	3/4	13/16
9/16	53	88	120	132	7/8	7/8
5/8	74	120	167	180	15/16	1
3/4	120	200	280	296	1-1/8	1-1/8
7/8	190	302	440	473	1-5/16	1-5/16
1	282	466	660	714	1-1/2	1-1/2

Metric

Bolt Diameter (mm)	Bolt Grade 5D	8G	10K	12K	Wrench Size (mm) Bolt and Nut
6	5	6	8	10	10
8	10	16	22	27	14
10	19	31	40	49	17
12	34	54	70	86	19
14	55	89	117	137	22
16	83	132	175	208	24
18	111	182	236	283	27
22	182	284	394	464	32
24	261	419	570	689	36

*—Torque values are for lightly oiled bolts. CAUTION: Bolts threaded into aluminum require much less torque.

General Torque Specifications

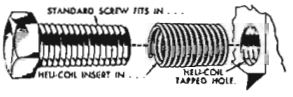

Heli-Coil installation
(© Chrysler Corp.)

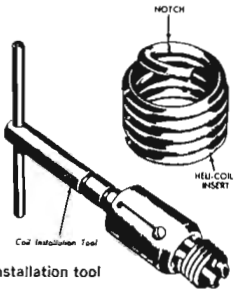

Heli-Coil and installation tool

Heli-Coil Insert			Drill	Tap	Insert. Tool	Extracting Tool
Thread Size	Part No.	Insert Length (In.)	Size	Part No.	Part No.	Part No.
1/2 -20	1185-4	3/8	17/64(.266)	4 CPB	528-4N	1227-6
5/16-18	1185-5	15/32	Q(.332)	5 CPB	528-5N	1227-6
3/8 -16	1185-6	9/16	X(.397)	6 CPB	528-6N	1227-6
7/16-14	1185-7	21/32	29/64(.453)	7 CPB	528-7N	1227-16
1/2 -13	1185-8	3/4	33/64(.516)	8 CPB	528-8N	1227-16

Heli-Coil Specifications

included in a mechanic's tool kit. An accurate torque wrench, and a dial indicator (reading in thousandths) mounted on a universal base should be available. Bolts and nuts with no torque specification should be tightened according to size (see chart). Special tools, where required, all are readily available from the major tool suppliers (i.e., Craftsman, Snap-On, K-D). The services of a competent automotive machine shop must also be readily available.

When assembling the engine, any parts that will be in frictional contact must be pre-lubricated, to provide protection on initial start-up. Vortex Pre-Lube, STP, or any product specifically formulated for this purpose may be used. NOTE: *Do not use engine oil.* Where semi-permanent (locked but removable) installation of bolts or nuts is desired, threads should be cleaned and coated with Loctite. Studs may be permanently installed using Loctite Stud and Bearing Mount.

Aluminum has become increasingly popular for use in engines, due to its low weight and excellent heat transfer characteristics. The following precautions must be observed when handling aluminum engine parts:

—Never hot-tank aluminum parts.

—Remove all aluminum parts (identification tags, etc.) from engine parts before hot-tanking (otherwise they will be removed during the process).

—Always coat threads lightly with engine oil or anti-seize compounds before installation, to prevent seizure.

—Never over-torque bolts or spark plugs in aluminum threads. Should stripping occur, threads can be restored according to the following procedure, using Heli-Coil thread inserts:

Tap drill the hole with the stripped threads to the specified size (see chart). Using the specified tap (NOTE: *Heli-Coil tap sizes refer to the size thread being replaced, rather than the actual tap size*), tap the hole for the Heli-Coil. Place the insert on the proper installation tool (see chart). Apply pressure on the insert while winding it clockwise into the hole, until the top of the insert is one turn below the surface. Remove the installation tool, and break the installation tang from the bottom of the insert by moving it up and down. If the Heli-Coil must be removed, tap the removal tool firmly into the hole, so that it engages the top thread, and turn the tool counter-clockwise to extract the insert.

Snapped bolts or studs may be removed, using a stud extractor (unthreaded) or Vise-Grip pliers (threaded). Penetrating oil (e.g., Liquid Wrench) will often aid in breaking frozen threads. In cases where the stud or bolt is flush with, or below the surface, proceed as follows:

Drill a hole in the broken stud or bolt, approximately ½ its diameter. Select a screw extractor (e.g., Easy-Out) of the proper size, and tap it into the stud or bolt. Turn the extractor counter-clockwise to remove the stud or bolt.

Magnaflux and Zyglo are inspection techniques used to locate material flaws, such as stress cracks. Magnafluxing coats the part with fine magnetic particles, and subjects the part to a magnetic field. Cracks cause breaks

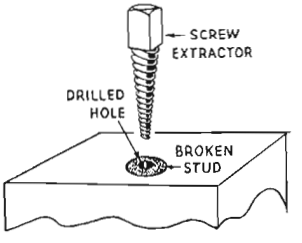

Screw extractor

in the magnetic field, which are outlined by the particles. Since Magnaflux is a magnetic process, it is applicable only to ferrous materials. The Zyglo process coats the material with a fluorescent dye penetrant, and then subjects it to blacklight inspection, under which cracks glow bright-

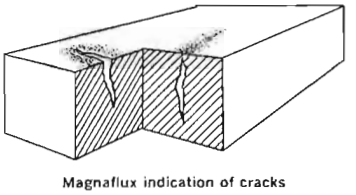

Magnaflux indication of cracks

ly. Parts made of any material may be tested using Zyglo. While Magnaflux and Zyglo are excellent for general inspection, and locating hidden defects, specific checks of suspected cracks may be made at lower cost and more readily using spot check dye. The dye is sprayed onto the suspected area, wiped off, and the area is then sprayed with a developer. Cracks then will show up brightly. Spot check dyes will only indicate surface cracks; therefore, structural cracks below the surface may escape detection. When questionable, the part should be tested using Magnaflux or Zyglo.

CYLINDER HEAD RECONDITIONING

Procedure	*Method*
Identify the valves:  Valve identification (© SAAB)	Invert the cylinder head, and number the valve faces front to rear, using a permanent felt-tip marker.
Remove the rocker arms:	Remove the rocker arms with shaft(s) or balls and nuts. Wire the sets of rockers, balls and nuts together, and identify according to the corresponding valve.
Remove the valves and springs:	Using an appropriate valve spring compressor (depending on the configuration of the cylinder head), compress the valve springs. Lift out the keepers with needlenose pliers, release the compressor, and remove the valve, spring, and spring retainer.
Check the valve stem-to-guide clearance:  Checking the valve stem-to-guide clearance (© American Motors Corp.)	Clean the valve stem with lacquer thinner or a similar solvent to remove all gum and varnish. Clean the valve guides using solvent and an expanding wire-type valve guide cleaner. Mount a dial indicator so that the stem is at 90° to the valve stem, as close to the valve guide as possible. Move the valve off its seat, and measure the valve guide-to-stem clearance by moving the stem back and forth to actuate the dial indicator. Measure the valve stems using a micrometer, and compare to specifications, to determine whether stem or guide wear is responsible for excessive clearance.
De-carbon the cylinder head and valves:  Removing carbon from the cylinder head (© Chevrolet Div. G.M. Corp.)	Chip carbon away from the valve heads, combustion chambers, and ports, using a chisel made of hardwood. Remove the remaining deposits with a stiff wire brush. NOTE: *Ensure that the deposits are actually removed, rather than burnished.*

Procedure	*Method*
Hot-tank the cylinder head:	Have the cylinder head hot-tanked to remove grease, corrosion, and scale from the water passages. NOTE: *In the case of overhead cam cylinder heads, consult the operator to determine whether the camshaft bearings will be damaged by the caustic solution.*
Degrease the remaining cylinder head parts:	Using solvent (i.e., Gunk), clean the rockers, rocker shaft(s) (where applicable), rocker balls and nuts, springs, spring retainers, and keepers. Do not remove the protective coating from the springs.
Check the cylinder head for warpage:  Checking the cylinder head for warpage (© Ford Motor Co.)	Place a straight-edge across the gasket surface of the cylinder head. Using feeler gauges, determine the clearance at the center of the straight-edge. Measure across both diagonals, along the longitudinal centerline, and across the cylinder head at several points. If warpage exceeds .003″ in a 6″ span, or .006″ over the total length, the cylinder head must be resurfaced. NOTE: *If warpage exceeds the manufacturers maximum tolerance for material removal, the cylinder head must be replaced.* When milling the cylinder heads of V-type engines, the intake manifold mounting position is altered, and must be corrected by milling the manifold flange a proportionate amount.
** Porting and gasket matching:  Marking the cylinder head for gasket matching (© Petersen Publishing Co.)  Port configuration before and after gasket matching (© Petersen Publishing Co.)	** Coat the manifold flanges of the cylinder head with Prussian blue dye. Glue intake and exhaust gaskets to the cylinder head in their installed position using rubber cement and scribe the outline of the ports on the manifold flanges. Remove the gaskets. Using a small cutter in a hand-held power tool (i.e., Dremel Moto-Tool), gradually taper the walls of the port out to the scribed outline of the gasket. Further enlargement of the ports should include the removal of sharp edges and radiusing of sharp corners. Do not alter the valve guides. NOTE: *The most efficient port configuration is determined only by extensive testing. Therefore, it is best to consult someone experienced with the head in question to determine the optimum alterations.*

Procedure	*Method*
** Polish the ports:  Relieved and polished ports (© Petersen Publishing Co.)  Polished combustion chamber (© Petersen Publishing Co.)	** Using a grinding stone with the above mentioned tool, polish the walls of the intake and exhaust ports, and combustion chamber. Use progressively finer stones until all surface imperfections are removed. NOTE: *Through testing, it has been determined that a smooth surface is more effective than a mirror polished surface in intake ports, and vice-versa in exhaust ports.*
* Knurling the valve guides:  Cut-away view of a knurled valve guide (© Petersen Publishing Co.)	* Valve guides which are not excessively worn or distorted may, in some cases, be knurled rather than replaced. Knurling is a process in which metal is displaced and raised, thereby reducing clearance. Knurling also provides excellent oil control. The possibility of knurling rather than replacing valve guides should be discussed with a machinist.
Replacing the valve guides: NOTE: *Valve guides should only be replaced if damaged or if an oversize valve stem is not available.* 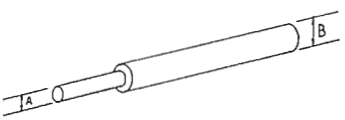 A-VALVE GUIDE I.D. B-SLIGHTLY SMALLER THAN VALVE GUIDE O.D. Valve guide removal tool 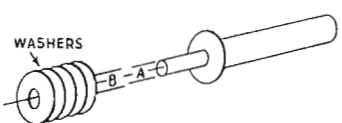 A-VALVE GUIDE I.D. B-LARGER THAN THE VALVE GUIDE O.D. Valve guide installation tool (with washers used during installation)	Depending on the type of cylinder head, valve guides may be pressed, hammered, or shrunk in. In cases where the guides are shrunk into the head, replacement should be left to an equipped machine shop. In other cases, the guides are replaced as follows: Press or tap the valve guides out of the head using a stepped drift (see illustration). Determine the height above the boss that the guide must extend, and obtain a stack of washers, their I.D. similar to the guide's O.D., of that height. Place the stack of washers on the guide, and insert the guide into the boss. NOTE: *Valve guides are often tapered or beveled for installation.* Using the stepped installation tool (see illustration), press or tap the guides into position. Ream the guides according to the size of the valve stem.

Procedure	*Method*
Replacing valve seat inserts:	Replacement of valve seat inserts which are worn beyond resurfacing or broken, if feasible, must be done by a machine shop.
Resurfacing (grinding) the valve face:  Grinding a valve (© Subaru) 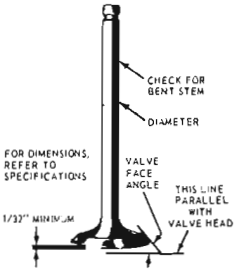 Critical valve dimensions (© Ford Motor Co.)	Using a valve grinder, resurface the valves according to specifications. CAUTION: *Valve face angle is not always identical to valve seat angle.* A minimum margin of 1/32" should remain after grinding the valve. The valve stem tip should also be squared and resurfaced, by placing the stem in the V-block of the grinder, and turning it while pressing lightly against the grinding wheel.
Resurfacing the valve seats using reamers:  Reaming the valve seat (© S.p.A. Fiat)  Valve seat width and centering (© Ford Motor Co.)	Select a reamer of the correct seat angle, slightly larger than the diameter of the valve seat, and assemble it with a pilot of the correct size. Install the pilot into the valve guide, and using steady pressure, turn the reamer clockwise. CAUTION: *Do not turn the reamer counter-clockwise.* Remove only as much material as necessary to clean the seat. Check the concentricity of the seat (see below). If the dye method is not used, coat the valve face with Prussian blue dye, install and rotate it on the valve seat. Using the dye marked area as a centering guide, center and narrow the valve seat to specifications with correction cutters. NOTE: *When no specifications are available, minimum seat width for exhaust valves should be 5/64", intake valves 1/16".* After making correction cuts, check the position of the valve seat on the valve face using Prussian blue dye.
Resurfacing the valve seats using a grinder:  Grinding a valve seat (© Subaru)	Select a pilot of the correct size, and a coarse stone of the correct seat angle. Lubricate the pilot if necessary, and install the tool in the valve guide. Move the stone on and off the seat at approximately two cycles per second, until all flaws are removed from the seat. Install a fine stone, and finish the seat. Center and narrow the seat using correction stones, as described above.

Procedure	*Method*
Checking the valve seat concentricity:  Checking the valve seat concentricity using a dial gauge (© American Motors Corp.)	Coat the valve face with Prussian blue dye, install the valve, and rotate it on the valve seat. If the entire seat becomes coated, and the valve is known to be concentric, the seat is concentric.
	* Install the dial gauge pilot into the guide, and rest the arm on the valve seat. Zero the gauge, and rotate the arm around the seat. Run-out should not exceed .002".
* Lapping the valves: NOTE: *Valve lapping is done to ensure efficient sealing of resurfaced valves and seats. Valve lapping alone is not recommended for use as a resurfacing procedure.*  Hand lapping the valves 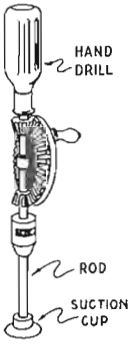 Home made mechanical valve lapping tool	* Invert the cylinder head, lightly lubricate the valve stems, and install the valves in the head as numbered. Coat valve seats with fine grinding compound, and attach the lapping tool suction cup to a valve head (NOTE: *Moisten the suction cup*). Rotate the tool between the palms, changing position and lifting the tool often to prevent grooving. Lap the valve until a smooth, polished seat is evident. Remove the valve and tool, and rinse away all traces of grinding compound.
	** Fasten a suction cup to a piece of drill rod, and mount the rod in a hand drill. Proceed as above, using the hand drill as a lapping tool. CAUTION: *Due to the higher speeds involved when using the hand drill, care must be exercised to avoid grooving the seat.* Lift the tool and change direction of rotation often.
Check the valve springs: 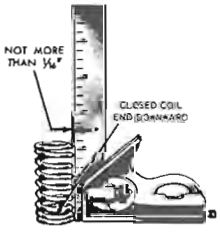 Checking the valve spring free length and squareness (© Ford Motor Co.) 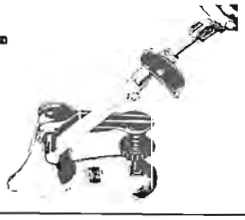 Checking the valve spring tension (© Chrysler Corp.)	Place the spring on a flat surface next to a square. Measure the height of the spring, and rotate it against the edge of the square to measure distortion. If spring height varies (by comparison) by more than 1/16" or if distortion exceeds 1/16", replace the spring.
	** In addition to evaluating the spring as above, test the spring pressure at the installed and compressed (installed height minus valve lift) height using a valve spring tester. Springs used on small displacement engines (up to 3 liters) should be ± 1 lb. of all other springs in either position. A tolerance of ± 5 lbs. is permissible on larger engines.

Procedure	*Method*
* Install valve stem seals:  Valve stem seal installation (© Ford Motor Co.)	* Due to the pressure differential that exists at the ends of the intake valve guides (atmospheric pressure above, manifold vacuum below), oil is drawn through the valve guides into the intake port. This has been alleviated somewhat since the addition of positive crankcase ventilation, which lowers the pressure above the guides. Several types of valve stem seals are available to reduce blow-by. Certain seals simply slip over the stem and guide boss, while others require that the boss be machined. Recently, Teflon guide seals have become popular. Consult a parts supplier or machinist concerning availability and suggested usages. NOTE: *When installing seals, ensure that a small amount of oil is able to pass the seal to lubricate the valve guides; otherwise, excessive wear may result.*
Install the valves:	Lubricate the valve stems, and install the valves in the cylinder head as numbered. Lubricate and position the seals (if used, see above) and the valve springs. Install the spring retainers, compress the springs, and insert the keys using needlenose pliers or a tool designed for this purpose. NOTE: *Retain the keys with wheel bearing grease during installation.*
Checking valve spring installed height: 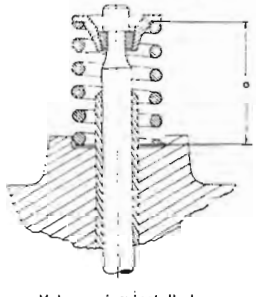  Valve spring installed height dimension (© Porsche) Measuring valve spring installed height (© Petersen Publishing Co.)	Measure the distance between the spring pad and the lower edge of the spring retainer, and compare to specifications. If the installed height is incorrect, add shim washers between the spring pad and the spring. CAUTION: *Use only washers designed for this purpose.*
** CC'ing the combustion chambers:	** Invert the cylinder head and place a bead of sealer around a combustion chamber. Install an apparatus designed for this purpose (burette mounted on a clear plate; see illustration) over the combustion chamber, and fill with the specified fluid to an even mark on the burette. Record the burette reading, and fill the combustion chamber with fluid. (NOTE: *A hole drilled in the plate will permit air to escape*). Subtract the burette reading, with the combustion chamber filled, from the previous reading, to determine combustion chamber volume in cc's. Duplicate this procedure in all combustion

Procedure	*Method*
 CC'ing the combustion chamber (© Petersen Publishing Co.)	chambers on the cylinder head, and compare the readings. The volume of all combustion chambers should be made equal to that of the largest. Combustion chamber volume may be increased in two ways. When only a small change is required (usually), a small cutter or coarse stone may be used to remove material from the combustion chamber. NOTE: *Check volume frequently.* Remove material over a wide area, so as not to change the configuration of the combustion chamber. When a larger change is required, the valve seat may be sunk (lowered into the head). NOTE: *When altering valve seat, remember to compensate for the change in spring installed height.*
Inspect the rocker arms, balls, studs, and nuts (where applicable): 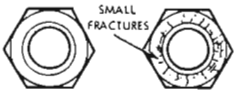 Stress cracks in rocker nuts (© Ford Motor Co.)	Visually inspect the rocker arms, balls, studs, and nuts for cracks, galling, burning, scoring, or wear. If all parts are intact, liberally lubricate the rocker arms and balls, and install them on the cylinder head. If wear is noted on a rocker arm at the point of valve contact, grind it smooth and square, removing as little material as possible. Replace the rocker arm if excessively worn. If a rocker stud shows signs of wear, it must be replaced (see below). If a rocker nut shows stress cracks, replace it. If an exhaust ball is galled or burned, substitute the intake ball from the same cylinder (if it is intact), and install a new intake ball. NOTE: *Avoid using new rocker balls on exhaust valves.*
Replacing rocker studs:  Reaming the stud bore for oversize rocker studs (© Buick Div. G.M. Corp.)  Extracting a pressed in rocker stud (© Buick Div. G.M. Corp.)	In order to remove a threaded stud, lock two nuts on the stud, and unscrew the stud using the lower nut. Coat the lower threads of the new stud with Loctite, and install. Two alternative methods are available for replacing pressed in studs. Remove the damaged stud using a stack of washers and a nut (see illustration). In the first, the boss is reamed .005-.006" oversize, and an oversize stud pressed in. Control the stud extension over the boss using washers, in the same manner as valve guides. Before installing the stud, coat it with white lead and grease. To retain the stud more positively, drill a hole through the stud and boss, and install a roll pin. In the second method, the boss is tapped, and a threaded stud installed. Retain the stud using Loctite Stud and Bearing Mount.

Procedure	*Method*
Inspect the rocker shaft(s) and rocker arms (where applicable): 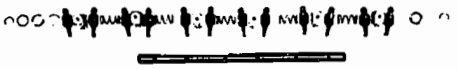 Disassembled rocker shaft parts arranged for inspection (© American Motors Corp.) 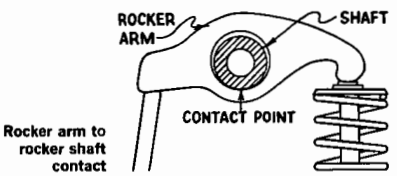	Remove rocker arms, springs and washers from rocker shaft. NOTE: *Lay out parts in the order they are removed.* Inspect rocker arms for pitting or wear on the valve contact point, or excessive bushing wear. Bushings need only be replaced if wear is excessive, because the rocker arm normally contacts the shaft at one point only. Grind the valve contact point of rocker arm smooth if necessary, removing as little material as possible. If excessive material must be removed to smooth and square the arm, it should be replaced. Clean out all oil holes and passages in rocker shaft. If shaft is grooved or worn, replace it. Lubricate and assemble the rocker shaft.
Inspect the camshaft bushings and the camshaft (overhead cam engines):	See next section.
Inspect the pushrods:	Remove the pushrods, and, if hollow, clean out the oil passages using fine wire. Roll each pushrod over a piece of clean glass. If a distinct clicking sound is heard as the pushrod rolls, the rod is bent, and must be replaced.
	* The length of all pushrods must be equal. Measure the length of the pushrods, compare to specifications, and replace as necessary.
Inspect the valve lifters: 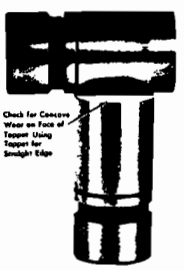 Checking the lifter face (© American Motors Corp.)	Remove lifters from their bores, and remove gum and varnish, using solvent. Clean walls of lifter bores. Check lifters for concave wear as illustrated. If face is worn concave, replace lifter, and carefully inspect the camshaft. Lightly lubricate lifter and insert it into its bore. If play is excessive, an oversize lifter must be installed (where possible). Consult a machinist concerning feasibility. If play is satisfactory, remove, lubricate, and reinstall the lifter.
* Testing hydraulic lifter leak down: 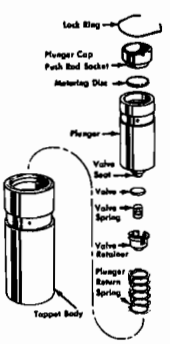 Exploded view of a typical hydraulic lifter (© American Motors Corp.)	Submerge lifter in a container of kerosene. Chuck a used pushrod or its equivalent into a drill press. Position container of kerosene so pushrod acts on the lifter plunger. Pump lifter with the drill press, until resistance increases. Pump several more times to bleed any air out of lifter. Apply very firm, constant pressure to the lifter, and observe rate at which fluid bleeds out of lifter. If the fluid bleeds very quickly (less than 15 seconds), lifter is defective. If the time exceeds 60 seconds, lifter is sticking. In either case, recondition or replace lifter. If lifter is operating properly (leak down time 15-60 seconds), lubricate and install it.

CYLINDER BLOCK RECONDITIONING

Procedure	*Method*
Checking the main bearing clearance: 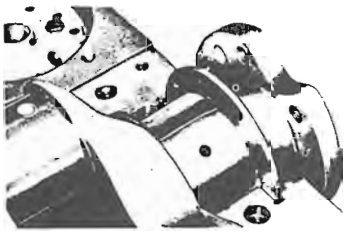 Plastigage installed on main bearing journal (© Chevrolet Div. G.M. Corp.)  Measuring Plastigage to determine main bearing clearance (© Chevrolet Div. G.M. Corp.)	Invert engine, and remove cap from the bearing to be checked. Using a clean, dry rag, thoroughly clean all oil from crankshaft journal and bearing insert. NOTE: *Plastigage is soluble in oil; therefore, oil on the journal or bearing could result in erroneous readings.* Place a piece of Plastigage along the full length of journal, reinstall cap, and torque to specifications. Remove bearing cap, and determine bearing clearance by comparing width of Plastigage to the scale on Plastigage envelope. Journal taper is determined by comparing width of the Plastigage strip near its ends. Rotate crankshaft 90° and retest, to determine journal eccentricity. NOTE: *Do not rotate crankshaft with Plastigage installed.* If bearing insert and journal appear intact, and are within tolerances, no further main bearing service is required. If bearing or journal appear defective, cause of failure should be determined before replacement.
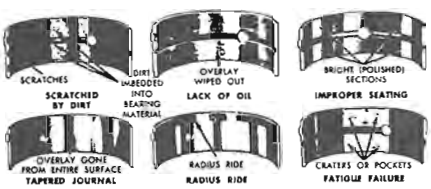 Causes of bearing failure (© Ford Motor Co.)	* Remove crankshaft from block (see below). Measure the main bearing journals at each end twice (90° apart) using a micrometer, to determine diameter, journal taper and eccentricity. If journals are within tolerances, reinstall bearing caps at their specified torque. Using a telescope gauge and micrometer, measure bearing I.D. parallel to piston axis and at 30° on each side of piston axis. Subtract journal O.D. from bearing I.D. to determine oil clearance. If crankshaft journals appear defective, or do not meet tolerances, there is no need to measure bearings; for the crankshaft will require grinding and/or undersize bearings will be required. If bearing appears defective, cause for failure should be determined prior to replacement.
Checking the connecting rod bearing clearance: 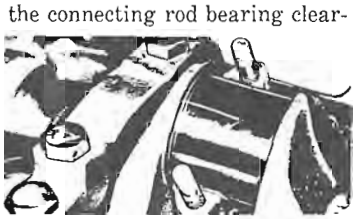 Plastigage installed on connecting rod bearing journal (© Chevrolet Div. G.M. Corp.)	Connecting rod bearing clearance is checked in the same manner as main bearing clearance, using Plastigage. Before removing the crankshaft, connecting rod side clearance also should be measured and recorded.
	* Checking connecting rod bearing clearance, using a micrometer, is identical to checking main bearing clearance. If no other service

Procedure	*Method*
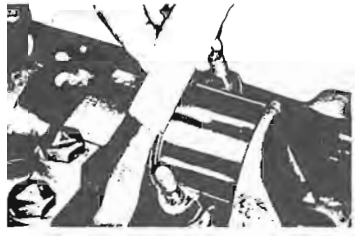 Measuring Plastigage to determine connecting rod bearing clearance (© Chevrolet Div. G.M. Corp.)	is required, the piston and rod assemblies need not be removed.
Removing the crankshaft: 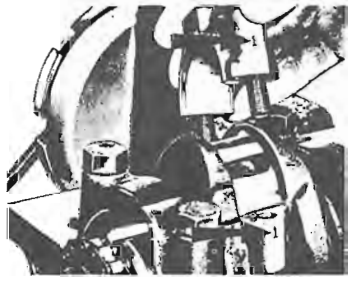 Connecting rod matching marks (© Ford Motor Co.)	Using a punch, mark the corresponding main bearing caps and saddles according to position (i.e., one punch on the front main cap and saddle, two on the second, three on the third, etc.). Using number stamps, identify the corresponding connecting rods and caps, according to cylinder (if no numbers are present). Remove the main and connecting rod caps, and place sleeves of plastic tubing over the connecting rod bolts, to protect the journals as the crankshaft is removed. Lift the crankshaft out of the block.
Remove the ridge from the top of the cylinder: 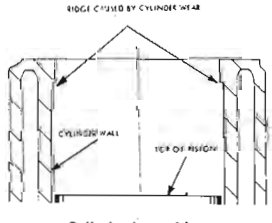 Cylinder bore ridge (© Pontiac Div. G.M. Corp.)	In order to facilitate removal of the piston and connecting rod, the ridge at the top of the cylinder (unworn area; see illustration) must be removed. Place the piston at the bottom of the bore, and cover it with a rag. Cut the ridge away using a ridge reamer, exercising extreme care to avoid cutting too deeply. Remove the rag, and remove cuttings that remain on the piston. CAUTION: *If the ridge is not removed, and new rings are installed, damage to rings will result.*
Removing the piston and connecting rod:  Removing the piston (© SAAB)	Invert the engine, and push the pistons and connecting rods out of the cylinders. If necessary, tap the connecting rod boss with a wooden hammer handle, to force the piston out. CAUTION: *Do not attempt to force the piston past the cylinder ridge* (see above).

Procedure	*Method*
Service the crankshaft:	Ensure that all oil holes and passages in the crankshaft are open and free of sludge. If necessary, have the crankshaft ground to the largest possible undersize.
	** Have the crankshaft Magnafluxed, to locate stress cracks. Consult a machinist concerning additional service procedures, such as surface hardening (e.g., nitriding, Tuftriding) to improve wear characteristics, cross drilling and chamfering the oil holes to improve lubrication, and balancing.
Removing freeze plugs:	Drill a hole in the center of the freeze plugs, and pry them out using a screwdriver or drift.
Remove the oil gallery plugs:	Threaded plugs should be removed using an appropriate (usually square) wrench. To remove soft, pressed in plugs, drill a hole in the plug, and thread in a sheet metal screw. Pull the plug out by the screw using pliers.
Hot-tank the block:	Have the block hot-tanked to remove grease, corrosion, and scale from the water jackets. NOTE: *Consult the operator to determine whether the camshaft bearings will be damaged during the hot-tank process.*
Check the block for cracks:	Visually inspect the block for cracks or chips. The most common locations are as follows: Adjacent to freeze plugs. Between the cylinders and water jackets. Adjacent to the main bearing saddles. At the extreme bottom of the cylinders. Check only suspected cracks using spot check dye (see introduction). If a crack is located, consult a machinist concerning possible repairs.
	** Magnaflux the block to locate hidden cracks. If cracks are located, consult a machinist about feasibility of repair.
Install the oil gallery plugs and freeze plugs:	Coat freeze plugs with sealer and tap into position using a piece of pipe, slightly smaller than the plug, as a driver. To ensure retention, stake the edges of the plugs. Coat threaded oil gallery plugs with sealer and install. Drive replacement soft plugs into block using a large drift as a driver.
	* Rather than reinstalling lead plugs, drill and tap the holes, and install threaded plugs.

Procedure	*Method*
Check the bore diameter and surface:	Visually inspect the cylinder bores for roughness, scoring, or scuffing. If evident, the cylinder bore must be bored or honed oversize to eliminate imperfections, and the smallest possible oversize piston used. The new pistons should be given to the machinist with the block, so that the cylinders can be bored or honed exactly to the piston size (plus clearance). If no flaws are evident, measure the bore diameter using a telescope gauge and micrometer, or dial gauge, parallel and perpendicular to the engine centerline, at the top (below the ridge) and bottom of the bore. Subtract the bottom measurements from the top to determine taper, and the parallel to the centerline measurements from the perpendicular measurements to determine eccentricity. If the measurements are not within specifications, the cylinder must be bored or honed, and an oversize piston installed. If the measurements are within specifications the cylinder may be used as is, with only finish honing (see below). NOTE: *Prior to submitting the block for boring, perform the following operation(s).*

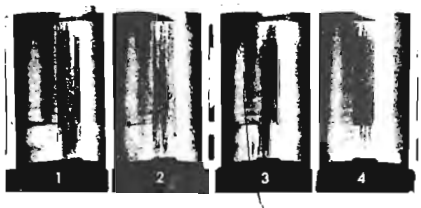

1, 2, 3 Piston skirt seizure resulted in this pattern. Engine must be rebored

4. Piston skirt and oil ring seizure caused this damage. Engine must be rebored

5, 6 Score marks caused by a split piston skirt. Damage is not serious enough to warrant reboring

7. Ring seized longitudinally, causing a score mark 1 3/16" wide, on the land side of the piston groove. The honing pattern is destroyed and the cylinder must be rebored

8. Result of oil ring seizure. Engine must be rebored

9. Oil ring seizure here was not serious enough to warrant reboring. The honing marks are still visible

Cylinder wall damage
(© Daimler-Benz A.G.)

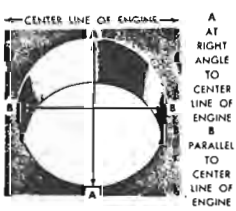

Cylinder bore measuring positions
(© Ford Motor Co.)

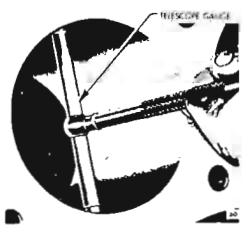

Measuring the cylinder bore with a telescope gauge
(© Buick Div. G.M. Corp.)

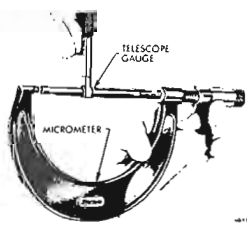

Determining the cylinder bore by measuring the telescope gauge with a micrometer
(© Buick Div. G.M. Corp.)

Measuring the cylinder bore with a dial gauge
(© Chevrolet Div. G.M. Corp.)

Procedure	*Method*
Check the block deck for warpage:	Using a straightedge and feeler gauges, check the block deck for warpage in the same manner that the cylinder head is checked (see Cylinder Head Reconditioning). If warpage exceeds specifications, have the deck resurfaced. NOTE: *In certain cases a specification for total material removal (Cylinder head and block deck) is provided. This specification must not be exceeded.*
* Check the deck height:	The deck height is the distance from the crankshaft centerline to the block deck. To measure, invert the engine, and install the crankshaft, retaining it with the center main cap. Measure the distance from the crankshaft journal to the block deck, parallel to the cylinder centerline. Measure the diameter of the end (front and rear) main journals, parallel to the centerline of the cylinders, divide the diameter in half, and subtract it from the previous measurement. The results of the front and rear measurements should be identical. If the difference exceeds .005", the deck height should be corrected. NOTE: *Block deck height and warpage should be corrected concurrently.*
Check the cylinder block bearing alignment:  Checking main bearing saddle alignment (© Petersen Publishing Co.)	Remove the upper bearing inserts. Place a straightedge in the bearing saddles along the centerline of the crankshaft. If clearance exists between the straightedge and the center saddle, the block must be align-bored.
Clean and inspect the pistons and connecting rods:  Removing the piston rings (© Subaru)	Using a ring expander, remove the rings from the piston. Remove the retaining rings (if so equipped) and remove piston pin. NOTE: *If the piston pin must be pressed out, determine the proper method and use the proper tools; otherwise the piston will distort.* Clean the ring grooves using an appropriate tool, exercising care to avoid cutting too deeply. Thoroughly clean all carbon and varnish from the piston with solvent. CAUTION: *Do not use a wire brush or caustic solvent on pistons.* Inspect the pistons for scuffing, scoring, cracks, pitting, or excessive ring groove wear. If wear is evident, the piston must be replaced. Check the connecting rod length by measuring the rod from the inside of the large end to the inside of the small end using calipers (see

Procedure	*Method*
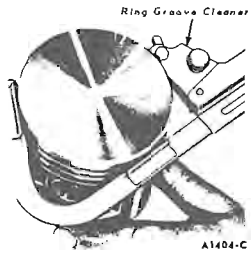 Cleaning the piston ring grooves (© Ford Motor Co.) 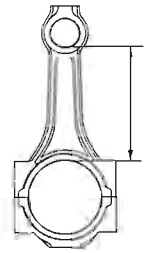 Connecting rod length checking dimension	illustration). All connecting rods should be equal length. Replace any rod that differs from the others in the engine.
	* Have the connecting rod alignment checked in an alignment fixture by a machinist. Replace any twisted or bent rods.
	* Magnaflux the connecting rods to locate stress cracks. If cracks are found, replace the connecting rod.
Fit the pistons to the cylinders: 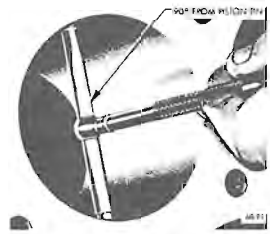 Measuring the cylinder with a telescope gauge for piston fitting (© Buick Div. G.M. Corp.) 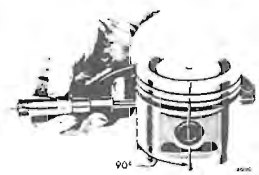 Measuring the piston for fitting ((© Buick Div. G.M. Corp.)	Using a telescope gauge and micrometer, or a dial gauge, measure the cylinder bore diameter perpendicular to the piston pin, 2½" below the deck. Measure the piston perpendicular to its pin on the skirt. The difference between the two measurements is the piston clearance. If the clearance is within specifications or slightly below (after boring or honing), finish honing is all that is required. If the clearance is excessive, try to obtain a slightly larger piston to bring clearance within specifications. Where this is not possible, obtain the first oversize piston, and hone (or if necessary, bore) the cylinder to size.
Assemble the pistons and connecting rods:  Installing piston pin lock rings ((© Nissan Motor Co., Ltd.)	Inspect piston pin, connecting rod small end bushing, and piston bore for galling, scoring, or excessive wear. If evident, replace defective part(s). Measure the I.D. of the piston boss and connecting rod small end, and the O.D. of the piston pin. If within specifications, assemble piston pin and rod. CAUTION: *If piston pin must be pressed in, determine the proper method and use the proper tools; otherwise the piston will distort.* Install the lock rings; ensure that they seat properly. If the parts are not within specifications, determine the service method for the type of engine. In some cases, piston and pin are serviced as an assembly when either is defective. Others specify reaming the piston and connecting rods for an oversize pin. If the connecting rod bushing is worn, it may in many cases be replaced. Reaming the piston and replacing the rod bushing are machine shop operations.

Procedure	*Method*
Clean and inspect the camshaft: 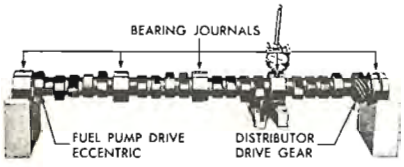 **Checking the camshaft for straightness** (© Chevrolet Motor Div. G.M. Corp.)	Degrease the camshaft, using solvent, and clean out all oil holes. Visually inspect cam lobes and bearing journals for excessive wear. If a lobe is questionable, check all lobes as indicated below. If a journal or lobe is worn, the camshaft must be reground or replaced. NOTE: *If a journal is worn, there is a good chance that the bushings are worn.* If lobes and journals appear intact, place the front and rear journals in V-blocks, and rest a dial indicator on the center journal. Rotate the camshaft to check straightness. If deviation exceeds .001", replace the camshaft.
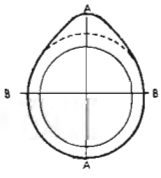 **Camshaft lobe measurement** (© Ford Motor Co.)	Check the camshaft lobes with a micrometer, by measuring the lobes from the nose to base and again at 90° (see illustration). The lift is determined by subtracting the second measurement from the first. If all exhaust lobes and all intake lobes are not identical, the camshaft must be reground or replaced.
Replace the camshaft bearings: 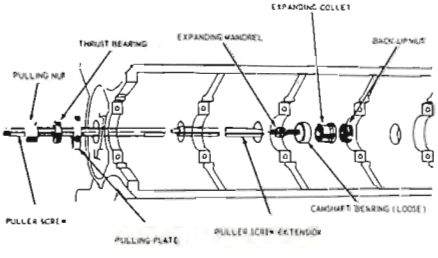 **Camshaft removal and installation tool (typical)** (© Ford Motor Co.)	If excessive wear is indicated, or if the engine is being completely rebuilt, camshaft bearings should be replaced as follows: Drive the camshaft rear plug from the block. Assemble the removal puller with its shoulder on the bearing to be removed. Gradually tighten the puller nut until bearing is removed. Remove remaining bearings, leaving the front and rear for last. To remove front and rear bearings, reverse position of the tool, so as to pull the bearings in toward the center of the block. Leave the tool in this position, pilot the new front and rear bearings on the installer, and pull them into position. Return the tool to its original position and pull remaining bearings into position. NOTE: *Ensure that oil holes align when installing bearings.* Replace camshaft rear plug, and stake it into position to aid retention.
Finish hone the cylinders: 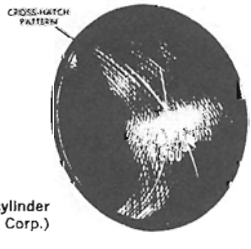 **Finish honed cylinder** (© Chrysler Corp.)	Chuck a flexible drive hone into a power drill, and insert it into the cylinder. Start the hone, and move it up and down in the cylinder at a rate which will produce approximately a 60° cross-hatch pattern (see illustration). NOTE: *Do not extend the hone below the cylinder bore.* After developing the pattern, remove the hone and recheck piston fit. Wash the cylinders with a detergent and water solution to remove abrasive dust, dry, and wipe several times with a rag soaked in engine oil.

Procedure	*Method*
Check piston ring end-gap: 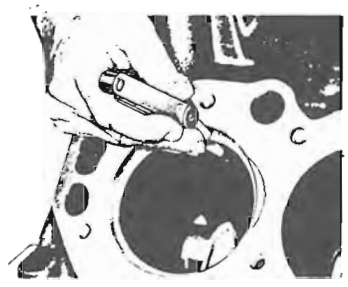 Checking ring end-gap (© Chevrolet Motor Div. G.M. Corp.)	Compress the piston rings to be used in a cylinder, one at a time, into that cylinder, and press them approximately 1″ below the deck with an inverted piston. Using feeler gauges, measure the ring end-gap, and compare to specifications. Pull the ring out of the cylinder and file the ends with a fine file to obtain proper clearance. CAUTION: *If inadequate ring end-gap is utilized, ring breakage will result.*
Install the piston rings: 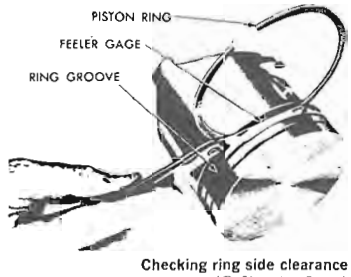 Checking ring side clearance (© Chrysler Corp.) 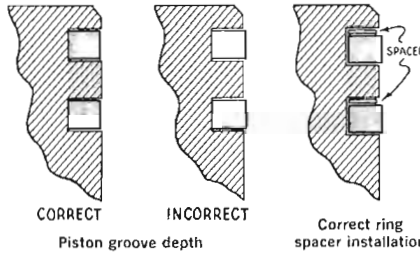 Piston groove depth — Correct ring spacer installation	Inspect the ring grooves in the piston for excessive wear or taper. If necessary, recut the groove(s) for use with an overwidth ring or a standard ring and spacer. If the groove is worn uniformly, overwidth rings, or standard rings and spacers may be installed without recutting. Roll the outside of the ring around the groove to check for burrs or deposits. If any are found, remove with a fine file. Hold the ring in the groove, and measure side clearance. If necessary, correct as indicated above. NOTE: *Always install any additional spacers above the piston ring.* The ring groove must be deep enough to allow the ring to seat below the lands (see illustration). In many cases, a "go-no-go" depth gauge will be provided with the piston rings. Shallow grooves may be corrected by recutting, while deep grooves require some type of filler or expander behind the piston. Consult the piston ring supplier concerning the suggested method. Install the rings on the piston, lowest ring first, using a ring expander. NOTE: *Position the ring markings as specified by the manufacturer (see car section).*
Install the camshaft:	Liberally lubricate the camshaft lobes and journals, and slide the camshaft into the block. CAUTION: *Exercise extreme care to avoid damaging the bearings when inserting the camshaft.* Install and tighten the camshaft thrust plate retaining bolts.
Check camshaft end-play:  Checking camshaft end-play with a feeler gauge (© Ford Motor Co.)	Using feeler gauges, determine whether the clearance between the camshaft boss (or gear) and backing plate is within specifications. Install shims behind the thrust plate, or reposition the camshaft gear and retest end-play.

Procedure	*Method*
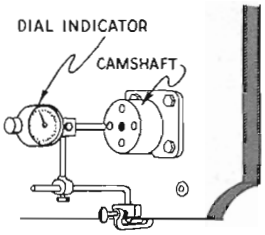 Checking camshaft end-play with a dial indicator	* Mount a dial indicator stand so that the stem of the dial indicator rests on the nose of the camshaft, parallel to the camshaft axis. Push the camshaft as far in as possible and zero the gauge. Move the camshaft outward to determine the amount of camshaft end-play. If the end-play is not within tolerance, install shims behind the thrust plate, or re-position the camshaft gear and retest.
Install the rear main seal (where applicable):  Seating the rear main seal (© Buick Div. G.M. Corp.)	Position the block with the bearing saddles facing upward. Lay the rear main seal in its groove and press it lightly into its seat. Place a piece of pipe the same diameter as the crankshaft journal into the saddle, and firmly seat the seal. Hold the pipe in position, and trim the ends of the seal flush if required.
Install the crankshaft: 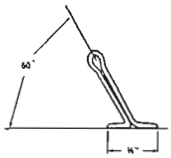 Home made bearing roll-out pin (© Pontiac Div. G.M. Corp.) 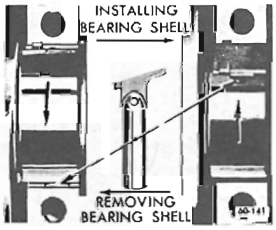 Removal and installation of upper bearing insert using a roll-out pin (© Buick Div. G.M. Corp.)	Thoroughly clean the main bearing saddles and caps. Place the upper halves of the bearing inserts on the saddles and press into position. NOTE: *Ensure that the oil holes align.* Press the corresponding bearing inserts into the main bearing caps. Lubricate the upper main bearings, and lay the crankshaft in position. Place a strip of Plastigage on each of the crankshaft journals, install the main caps, and torque to specifications. Remove the main caps, and compare the Plastigage to the scale on the Plastigage envelope. If clearances are within tolerances, remove the Plastigage, turn the crankshaft 90°, wipe off all oil and retest. If all clearances are correct, remove all Plastigage, thoroughly

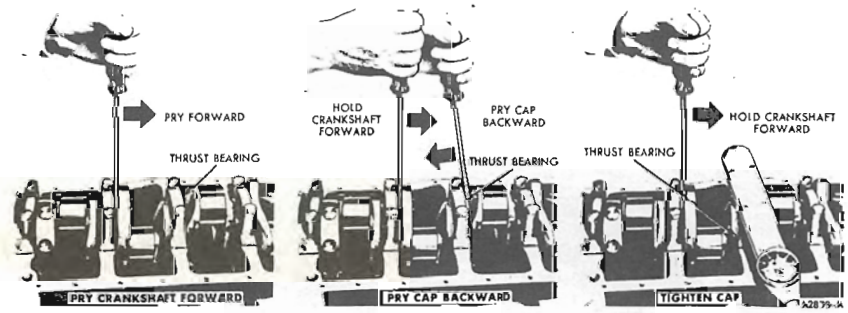

Aligning the thrust bearing (© Ford Motor Co.)

Procedure	*Method*
	lubricate the main caps and bearing journals, and install the main caps. If clearances are not within tolerance, the upper bearing inserts may be removed, without removing the crankshaft, using a bearing roll out pin (see illustration). Roll in a bearing that will provide proper clearance, and retest. Torque all main caps, excluding the thrust bearing cap, to specifications. Tighten the thrust bearing cap finger tight. To properly align the thrust bearing, pry the crankshaft the extent of its axial travel several times, the last movement held toward the front of the engine, and torque the thrust bearing cap to specifications. Determine the crankshaft end-play (see below), and bring within tolerance with thrust washers.
Measure crankshaft end-play: 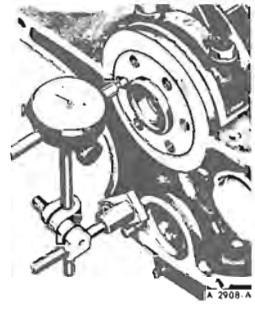 Checking crankshaft end-play with a dial indicator (© Ford Motor Co.)  Checking crankshaft end-play with a feeler gauge (© Chevrolet Div. (G.M. Corp.)	Mount a dial indicator stand on the front of the block, with the dial indicator stem resting on the nose of the crankshaft, parallel to the crankshaft axis. Pry the crankshaft the extent of its travel rearward, and zero the indicator. Pry the crankshaft forward and record crankshaft end-play. NOTE: *Crankshaft end-play also may be measured at the thrust bearing, using feeler gauges* (see illustration).
Install the pistons:	Press the upper connecting rod bearing halves into the connecting rods, and the lower halves into the connecting rod caps. Position the piston ring gaps according to specifications (see car section), and lubricate the pistons. Install a ring compresser on a piston, and press two long (8″) pieces of plastic tubing over the rod bolts. Using the plastic tubes as a guide, press the pistons into the bores and onto the crankshaft with a wooden hammer handle. After seating the rod on the crankshaft journal, remove the tubes and install the cap finger tight. Install the remaining pistons in the same man-

Procedure	*Method*
 Tubing used as guide when installing a piston (© Oldsmobile Div. G.M. Corp.) 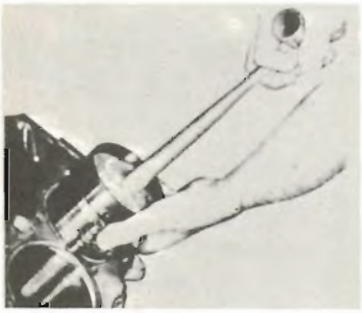 Installing a piston (© Chevrolet Div. G.M. Corp.)	ner. Invert the engine and check the bearing clearance at two points (90° apart) on each journal with Plastigage. NOTE: *Do not turn the crankshaft with Plastigage installed.* If clearance is within tolerances, remove *all* Plastigage, thoroughly lubricate the journals, and torque the rod caps to specifications. If clearance is not within specifications, install different thickness bearing inserts and recheck. CAUTION: *Never shim or file the connecting rods or caps.* Always install plastic tube sleeves over the rod bolts when the caps are not installed, to protect the crankshaft journals.
Check connecting rod side clearance:  Checking connecting rod side clearance (© Chevrolet Div. G.M. Corp.)	Determine the clearance between the sides of the connecting rods and the crankshaft, using feeler gauges. If clearance is below the minimum tolerance, the rod may be machined to provide adequate clearance. If clearance is excessive, substitute an unworn rod, and recheck. If clearance is still outside specifications, the crankshaft must be welded and reground, or replaced.
Inspect the timing chain:	Visually inspect the timing chain for broken or loose links, and replace the chain if any are found. If the chain will flex sideways, it must be replaced. Install the timing chain as specified. NOTE: *If the original timing chain is to be reused, install it in its original position.*

Procedure	*Method*
Check timing gear backlash and runout: 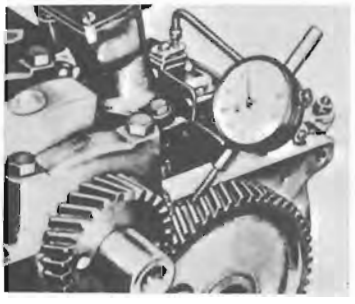 Checking camshaft gear backlash (© Chevrolet Div. G.M. Corp.) 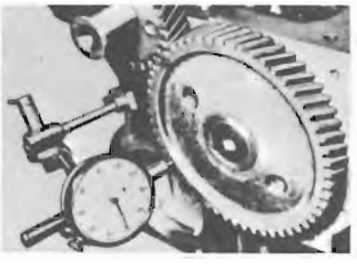 Checking camshaft gear runout (© Chevrolet Div. G.M. Corp.)	Mount a dial indicator with its stem resting on a tooth of the camshaft gear (as illustrated). Rotate the gear until all slack is removed, and zero the indicator. Rotate the gear in the opposite direction until slack is removed, and record gear backlash. Mount the indicator with its stem resting on the edge of the camshaft gear, parallel to the axis of the camshaft. Zero the indicator, and turn the camshaft gear one full turn, recording the runout. If either backlash or runout exceed specifications, replace the worn gear(s).

Completing the Rebuilding Process

Following the above procedures, complete the rebuilding process as follows:

Fill the oil pump with oil, to prevent cavitating (sucking air) on initial engine start up. Install the oil pump and the pickup tube on the engine. Coat the oil pan gasket as necessary, and install the gasket and the oil pan. Mount the flywheel and the crankshaft vibrational damper or pulley on the crankshaft. NOTE: *Always use new bolts when installing the flywheel.* Inspect the clutch shaft pilot bushing in the crankshaft. If the bushing is excessively worn, remove it with an expanding puller and a slide hammer, and tap a new bushing into place.

Position the engine, cylinder head side up. Lubricate the lifters, and install them into their bores. Install the cylinder head, and torque it as specified in the car section. Insert the pushrods (where applicable), and install the rocker shaft(s) (if so equipped) or position the rocker arms on the pushrods. If solid lifters are utilized, adjust the valves to the "cold" specifications.

Mount the intake and exhaust manifolds, the carburetor(s), the distributor and spark plugs. Adjust the point gap and the static ignition timing. Mount all accessories and install the engine in the car. Fill the radiator with coolant, and the crankcase with high quality engine oil.

Break-in Procedure

Start the engine, and allow it to run at low speed for a few minutes, while checking for leaks. Stop the engine, check the oil level, and fill as necessary. Restart the engine, and fill the cooling system to capacity. Check the point dwell angle and adjust the ignition timing and the valves. Run the engine at low to medium speed (800-2500 rpm) for approximately ½ hour, and retorque the cylinder head bolts. Road test the car, and check again for leaks.

Follow the manufacturer's recommended engine break-in procedure and maintenance schedule for new engines.

4 · Emission Controls and Fuel System

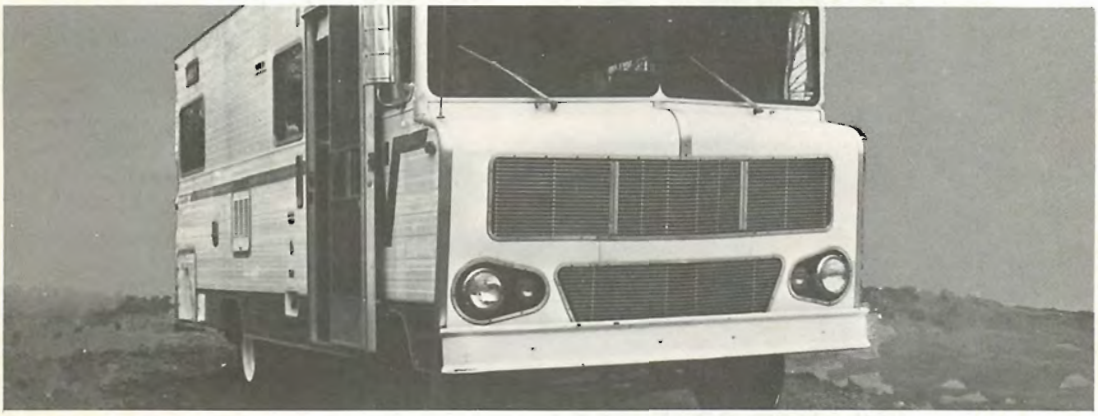

There are three types of automobile pollutants that concern automotive engineers: crankcase fumes, exhaust gases (mainly nitrous oxides), and gasoline evaporation. The devices and systems used to limit these pollutants are commonly called emission control equipment.

Crankcase Emission Controls

The crankcase emission control equipment consists of a positive crankcase ventilation (PCV) valve, a closed or open oil filler cap, and all of the hoses that connect this equipment.

When the engine is running, a small portion of the gases which are formed in the combustion chamber leak by the piston rings and enter the crankcase. Since these gases are under pressure they tend to escape from the crankcase and enter into the atmosphere. If these gases were allowed to remain in the crankcase for any length of time, they would contaminate the engine oil and cause sludge to build up. If the gases are allowed to escape into the atmosphere, they would pollute the air, as they contain unburned hydrocarbons. The crankcase emission control equipment recycles these gases back into the engine combustion chamber, where they are burned.

Crankcase gases are recycled in the following manner. While the engine is running, clean filtered air is drawn into the crankcase by way of the carburetor air cleaner, through a hose leading to the oil filler cap. As the air passes through the crankcase it picks up the combustion gases and carries them out of the crankcase, up through the PCV valve and into the intake manifold. After they enter the intake manifold they are drawn into the combustion chamber where they are burned.

The most critical component of the system is the PCV valve. This vacuum-controlled valve regulates the amount of gases which are recycled into the combustion chamber. At low engine speeds the valve is partially closed, limiting the flow of gases into the intake manifold. As engine speed increases, the valve opens to admit greater quantities of the gases into the intake manifold. If the valve should become blocked or plugged, the gases will be prevented from escaping the crankcase by the normal route. Since these gases are under pressure, they will find their own way out of the crankcase. This alternate route is usually a weak oil

seal or gasket in the engine. As the gas escapes by the gasket, it also creates an oil leak. Besides causing oil leaks, a clogged PCV valve also allows these gases to remain in the crankcase for an extended period of time, promoting the formation of sludge in the engine.

The above explanation and the troubleshooting procedure which follows applies to all of the engines installed in Dodge motor home chassis, since all are equipped with PCV systems.

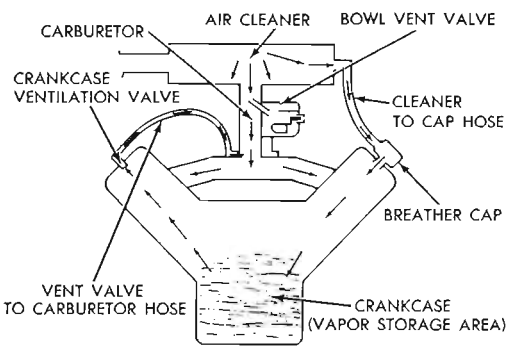

Diagram of the positive crankcase ventilation (PCV) system

Troubleshooting

With the engine running, pull the PCV valve and hose from the valve cover rubber grommet. If the valve is not plugged, a hissing noise will be heard as air passes through the valve, and a strong vacuum should be felt when a finger is placed over the valve inlet. Replace the valve if it is suspected of being blocked. Reinstall the PCV valve, then remove the oil filler cap (crankcase inlet air cleaner). Loosely hold a piece of paper over the opening in the valve cover. After allowing about a minute for the crankcase pressure to drop, the paper should be sucked against the opening in the rocker cover.

Removal and Installation

1. Pull the PCV valve and hose from the rubber grommet in the valve cover.
2. Remove the PCV valve from the hose. Inspect the inside of the PCV valve. Shake the PCV valve assembly. If the mechanism is free a clicking noise will be heard. If the PCV valve is dirty, clogged, or a clicking noise cannot be heard when shaken, replace the PCV valve with a new one. The connecting hoses can be cleaned in a safe solvent.
3. If the PCV valve hose was removed, connect it to the intake manifold.
4. Connect the PCV valve to its hose.
5. Install the PCV valve into the rubber grommet in the valve rocker cover.

Exhaust Emission Controls

Control of exhaust emissions from the 318, 413, and 440 V8 engines installed in Dodge motor home chassis is accomplished by a combination of engine and component modifications. Modifications to the combustion chamber, intake manifold, camshaft, carburetor and ignition system form the basic control system. These changes have been integrated into a system which controls exhaust emissions while maintaining vehicle performance.

Complete effectiveness of the system depends on the engine idle speed, ignition timing, and idle mixture being set according to the specifications shown on a "Vehicle Emission Control Information Label" located in the engine compartment, or on the driver's side window.

Emission control information is located on a sticker on the driver's side window

Evaporative Emission Controls

Dodge motor home chassis manufactured after January 1, 1973 must be

equipped with an evaporative emission control system to prevent emission of fuel vapors from the fuel system if they are to be sold in California.

Changes in atmospheric temperature causes the air within the tank to expand and contract. As the temperature rises, air escapes through the tank vent tube or the vent in the tank filler cap. The air which escapes contains gasoline vapors. In a similar manner, the gasoline which fills the carburetor float bowl expands when the engine is stopped. Engine heat causes expansion. The vapors escape through the carburetor and air cleaner.

Emission of fuel vapors is prevented by venting the fuel tank and the carburetor fuel bowl (318 and 440 V8s) through a canister containing activated charcoal granules. When the fuel tank is filled, the fuel limiter system will leave an air space at the top of the tank to permit control of fuel expansion. The air space will be left because the fuel filler tube extends down into the fuel tank. The fuel tank filler cap is unvented except when experiencing limiting pressure or vacuum.

As fuel evaporates or when expansion occurs in the tank, vapors are metered into a vent tube through a metering orifice. The metering orifice is located in the rubber vent hose near the evaporative control system (ECS) which is a dome mounted on top of the fuel tank. Location of the vent tube metering orifice near the dome prevents liquid fuel from entering the vent tube.

Vapors from the fuel tank pass through the vent tube to the charcoal canister, which is located on the inside of the right frame rail at the front of the chassis. The canister absorbs fuel vapors in a bed of activated charcoal and retains them until the canister is purged by air drawn through a purge line.

A similar vent tube runs from the carburetor fuel bowl on the 318 and 440 V8s to the canister. Vapors accumulating in the top of the carburetor fuel bowl are conveyed to the charcoal canister and absorbed. A fuel bowl vent tube is not required on the 413 V8 because the fuel bowl on the Holley 4-bbl carburetor is internally vented.

Absorbtion of vapors from the fuel tank and carburetor fuel bowl occurs when the motor home is parked. The activated charcoal bed in the canister is purged or cleaned when the motor home is operating. When the engine is started and operates at idle speed, vapors are drawn from the canister through a 0.030 in. restriction. At idle speed the purge valve is closed and the 0.030 in. restriction provides the only outlet for the vapors in the canister. When the engine speed is in-

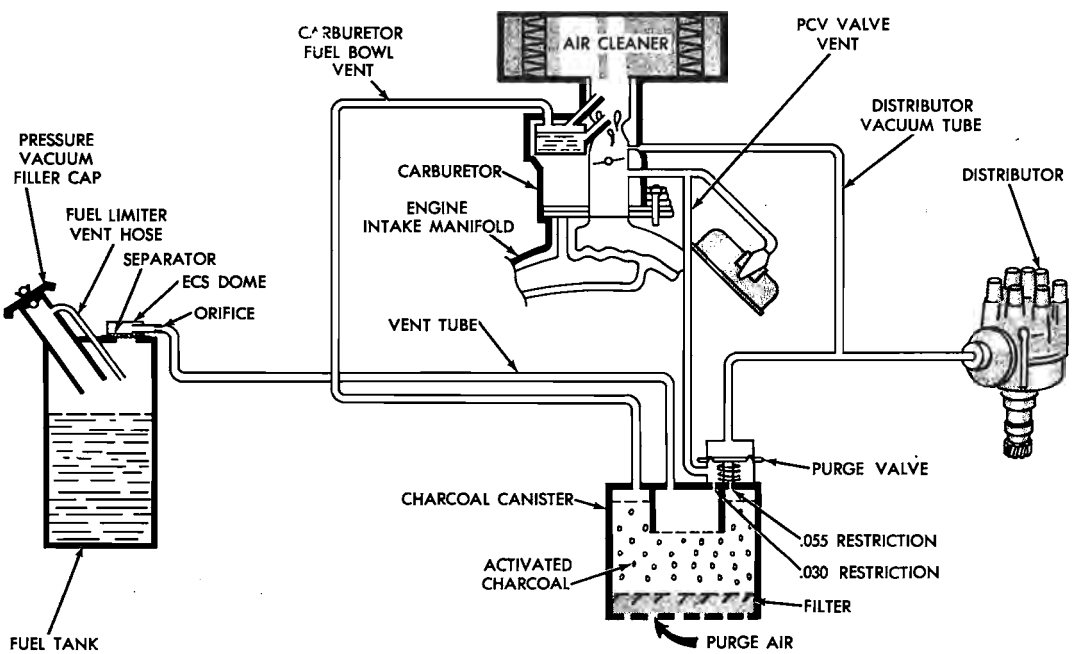

Diagram of the fuel evaporative emission control system

creased above idle, the purge valve opens and permits the vapors to pass out of the canister through a 0.055 in. restriction as well. Operation of the diaphragm-type purge valve is controlled by the same vacuum which operates the distributor vacuum advance.

Fuel System

FUEL PUMP

Pressure Test

1. Insert a "T" fitting in the fuel line at the carburetor. The hose from the "T" fitting to the pressure gauge should be no longer than 6 in.
2. Start the engine and run it at curb idle speed.

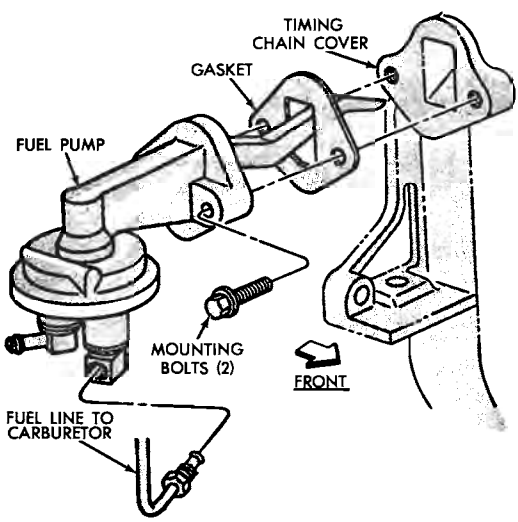

The fuel pump assembly on a 318 V8

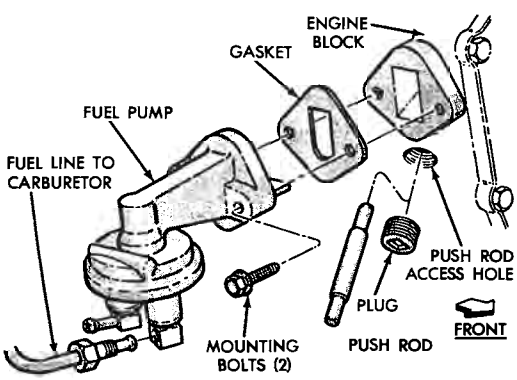

The fuel pump assembly on the 413 and 440 V8s

3. The pressure reading should remain constant within specifications and return to zero slowly when the engine is shut off. If the pressure is not up to specification or if the pressure instantly drops to zero when the engine is shut off, replace the fuel pump.

Volume Check

One pint of fuel must be expelled from the fuel line at the carburetor in 30 seconds or less at idle speed.

Removal and Installation

1. Disconnect the inlet and outlet lines at the fuel pump. Plug the lines to prevent the loss of fuel and the entrance of dirt.
2. Remove the two attaching bolts holding the fuel pump to the engine.
3. Remove the pump and gasket from the engine.
4. Clean the mating surfaces and install the fuel pump in the reverse order of removal. On the 318 V8, apply a small amount of light grease to the fuel pump actuating lever where it contacts the camshaft eccentric. On the 413 and 440 V8 engines there is a fuel pump pushrod access hole just below the fuel pump mounting boss to help in positioning the fuel pump pushrod when installing the pump.

CARBURETORS

The 318 V8 uses a Carter 1–¼ in. BBD carburetor. The 440 V8 uses the Carter Thermo-Quad carburetor. The 413 V8 uses either a Holley Series 4150C or Series 4160C carburetor. The Carter 1–¼ in. BBD carburetor is a 2 barrel carburetor. The Carter Thermo-Quad and Holley carburetors are 4 barrel carburetors.

Removal and Installation

1. Remove the air cleaner.
2. Remove the throttle actuating linkage from the throttle lever at the carburetor. Disconnect the distributor vacuum line, the fuel pump-to-carburetor fuel line, and the choke heat tube (non-electric) at the carburetor.
3. Remove the carburetor retaining nuts and remove the carburetor. Remove the carburetor mounting gasket, spacer, and the lower gasket, from the intake manifold.

4. Install the carburetor in the reverse order of removal. Use new mounting gaskets under the carburetor and spacer.

Overhaul

Efficient carburetion depends greatly on careful cleaning and inspection during overhaul since dirt, gum, water or varnish in or on the carburetor parts are often responsible for poor performance.

Overhaul the carburetor in a clean, dust-free area. Carefully disassemble the carburetor, referring often to the exploded views. Keep all similar and look-alike parts segregated during disassembly and cleaning to avoid accidental interchange during assembly. Make a note of all jet sizes.

When the carburetor is disassembled wash all parts (except diaphragms, electric choke units, pump plunger and any other plastic, leather, fiber, or rubber parts) in clean carburetor solvent. Do not leave the parts in the solvent any longer than is necessary to sufficiently loosen the dirt and deposits. Excessive cleaning may remove the special finish from the float bowl and choke valve bodies, leaving these parts unfit for service. Rinse all parts in clean solvent and blow them dry with compressed air or allow them to air dry, while resting on clean, lintless paper. Wipe clean all cork, plastic, leather and fiber parts with a clean, lint-free cloth.

Blow out all passages and jets with compressed air and be sure that there are no restrictions or blockages. Never use wire or similar tools to clean jets, fuel passages or air bleeds. Clean all jets and valves separately to avoid accidental interchange.

Examine all parts for wear or damage. If wear or damage is found, replace the defective parts. Especially, inspect the following:

1. Check the float needle and seat for wear. If wear is found, replace the complete assembly.

2. Check the float hinge pin for wear and the floats for dents or distortion. Replace the float if fuel has leaked into it.

3. Check the throttle and choke shaft bores for wear or an out-of-round condition. Damage or wear to the throttle arm, shaft or shaft bore will often require replacement of the throttle body. These parts require a close tolerance of fit; wear may allow air leakage, which could affect starting and idling.

NOTE: *Throttle shafts and bushings are not normally included in overhaul kits. They can be purchased separately.*

4. Inspect the idle mixture adjusting needles for burrs or grooves. Any such condition requires replacement of the needle, since you will not be able to obtain a satisfactory idle.

5. Test the accelerator pump check valves. They should pass air one way, but not the other. Test for proper seating by blowing and sucking on the valve. Replace the valve as necessary. If the valve is satisfactory, wash the valve again to remove moisture.

6. Check the bowl cover for warped surfaces with a straightedge.

7. Closely inspect the valves and seats for wear and damage, replacing as necessary.

8. After the carburetor is assembled, check the choke valve for freedom of operation.

Carburetor overhaul kits are recommended for each overhaul. These kits contain all gaskets and new parts to replace those that deteriorate most rapidly. Failure to replace all of the parts supplied with the kit (especially gaskets) can result in poor performance later.

Most carburetor manufacturers supply overhaul kits of three basic types: minor repair; major repair; and gasket kits. Basically, they contain the following:

Minor Repair Kits:
- All gaskets
- Float needle valve
- Mixture adjusting screws
- All diaphragms
- Spring for the pump diaphragm

Major Repair Kits:
- All jets and gaskets
- All diaphragms
- Float needle valve
- Mixture adjusting screws
- Pump ball valve
- Main jet carrier
- Float
- Some float bowl cover hold-down screws and washers

Gasket Kits:
- All gaskets

After cleaning and checking all compo-

nents, reassemble the carburetor, using new parts and referring to the exploded views. When reassembling, make sure that all screws and jets are tight in their seats, but do not overtighten, as the tips will be distorted. Tighten all screws gradually, in rotation. Do not tighten needle valves into their seats; uneven jetting will result. Always use new gaskets. Be sure to adjust the float level.

Secondary Throttle Linkage Adjustment

CARTER THERMO-QUAD® CARBURETOR

1. Remove the carburetor.
2. Block the choke valve in the wide-

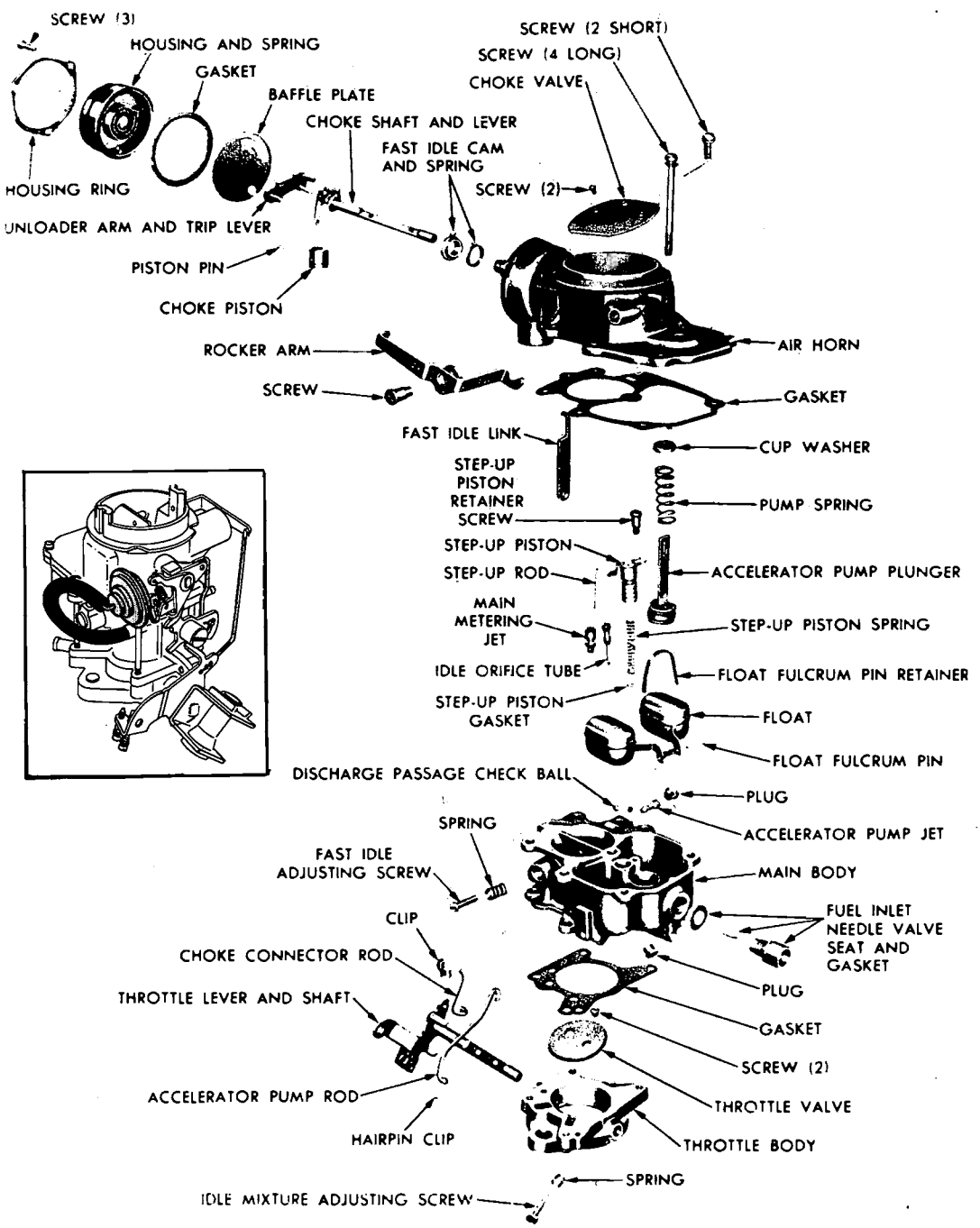

An exploded view of the Carter BBD carburetor

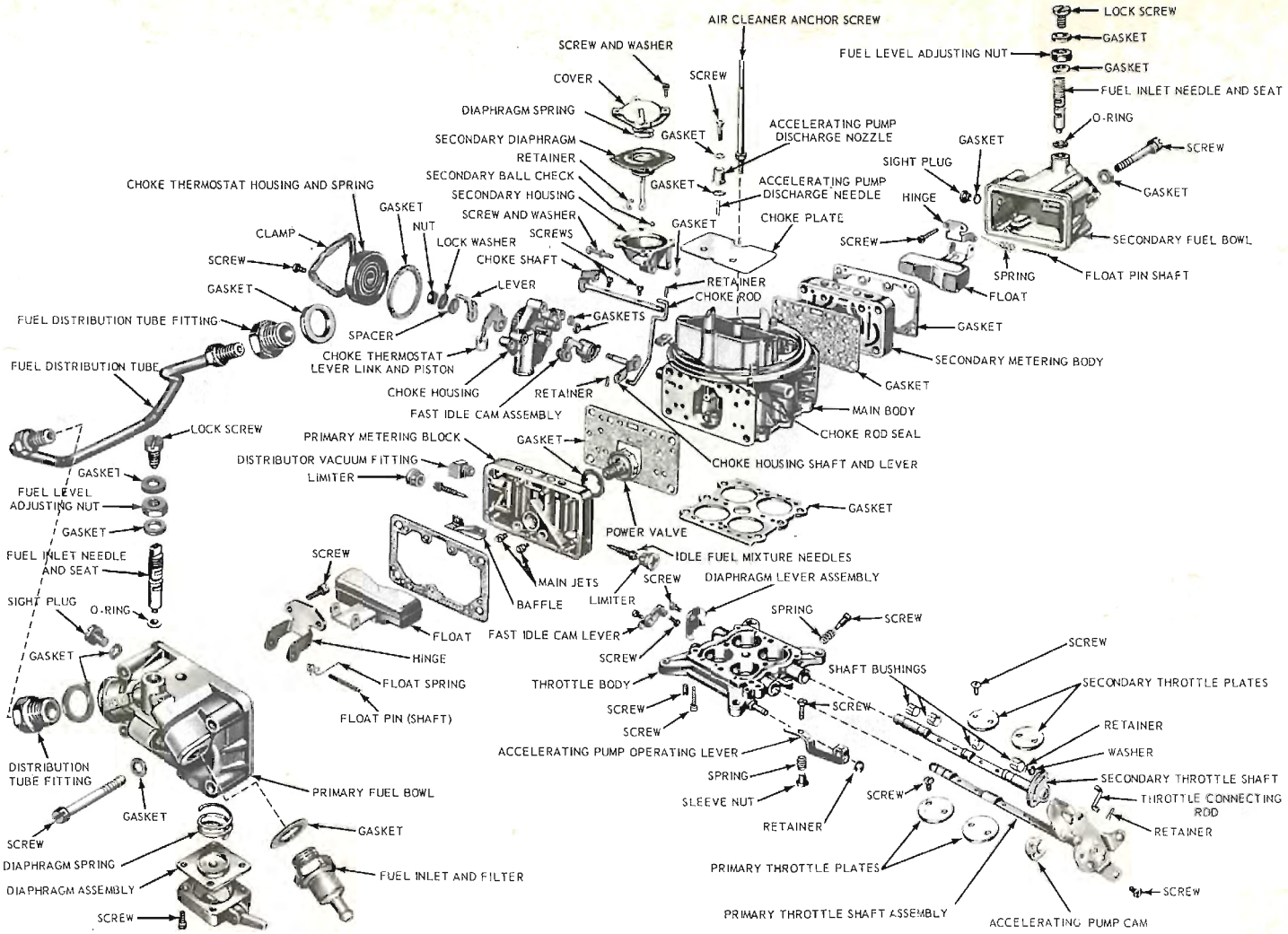

An exploded view of the Holley Model 4150C carburetor with a thermostatic choke. The Holley Model 4160C is very similar

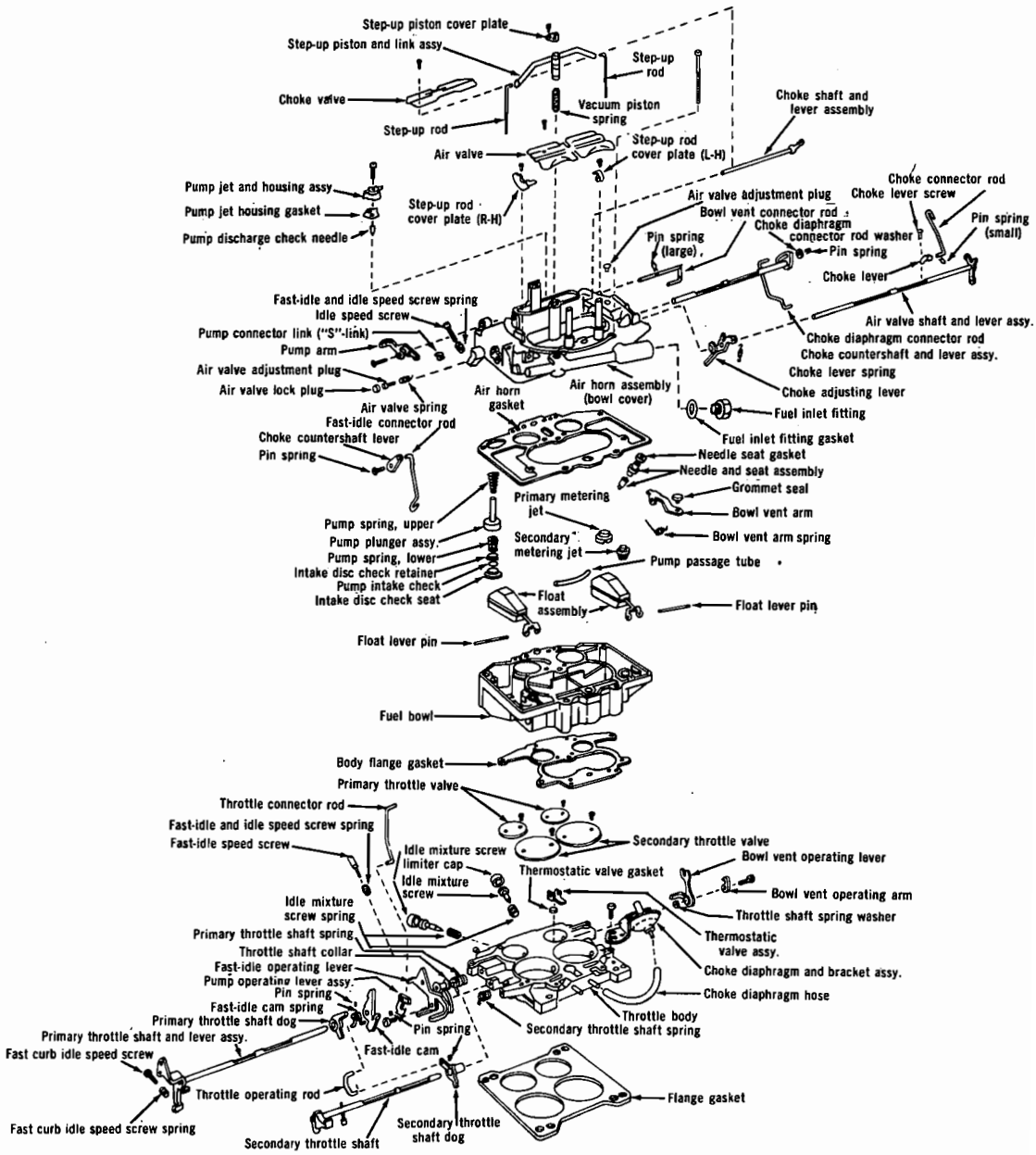

An exploded view of the Carter Thermo-Quad® carburetor

open position and invert the carburetor.

3. Open the primary throttle valves via the throttle lever as far as possible. Both the primary and secondary throttle stops must contact at the same time.

4. To adjust; bend the secondary throttle operating rod at the angle with a pair of pliers, until the correct adjustment is obtained.

Secondary Air Valve Adjustment

Carter Thermo-Quad® Carburetor

1. With the air valve in the closed position, the opening along the air valve at the long side must be at its maximum and parallel with the air horn gasket surface.

2. With the air valve in the wide-open position, the opening of the air valve at

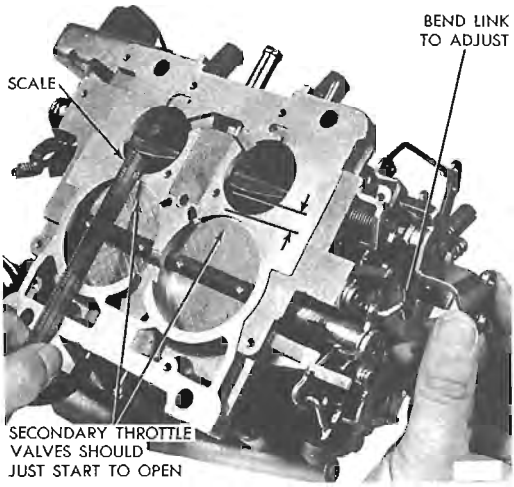

Secondary throttle linkage adjustment on the Carter Thermo-Quad carburetor

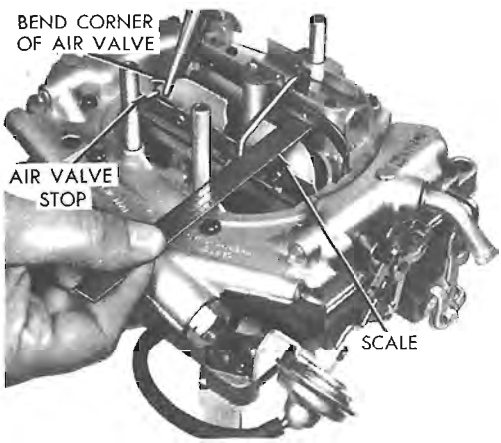

Adjusting the secondary air valve opening on the Carter Thermo-Quad carburetor

the short side and air horn should be 29/64 in.

Float and Fuel Level Adjustment

Carter BBD Carburetor

1. With the carburetor removed from the vehicle and the main body removed from the base, invert the main body. Catch the pump intake check ball when it falls out.

2. With only the weight of the floats forcing the needle against its seat, check the distance from the surface of the fuel bowl to the crown of each float at their centers. The distance should be ¼ in.

3. Adjustment is made by holding the floats on the bottom of the bowl and bending the float lip toward or away from the needle. Do not allow the lip to push against the needle while bending the lip.

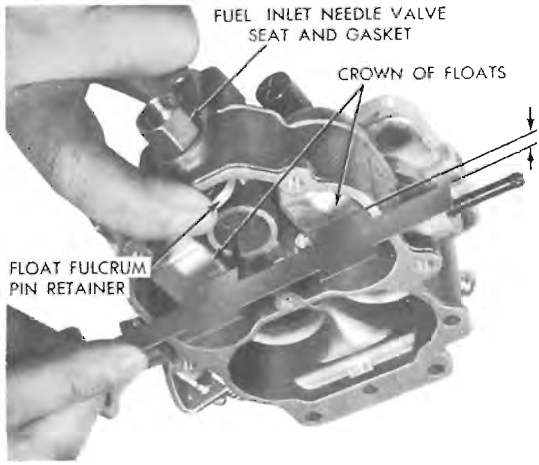

Checking the float setting on a Carter BBD carburetor

4. Assemble and install the carburetor in the reverse order of disassembly and removal.

Holley Carburetors

It is not necessary to remove the carburetor from the engine to adjust the float and fuel level on the Holley carburetors.

1. Place the vehicle on a level surface, remove the engine cover and the air cleaner assembly.

2. Place an absorbent cloth under the primary fuel bowl.

3. Start the engine and remove the sight plug from the primary bowl.

4. Using a wrench and a screwdriver, turn the adjusting nut either up or down until fuel just dribbles out of the sight hole.

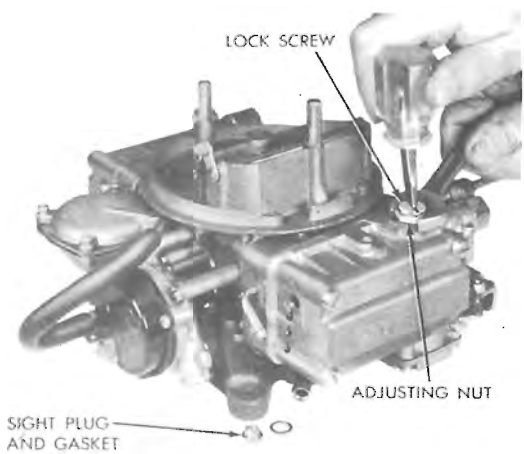

Adjusting the fuel level in the fuel bowls on the Holley 4-bbl carburetors

5. After the correct fuel level has been established, tighten the lockscrew while holding the adjusting nut with the wrench.
6. Reinstall the sight plug and gasket. Tighten the plug securely.
7. Check the fuel level in the secondary fuel bowl in the same manner as above.
8. Turn off the engine, install the air cleaner, and replace the engine cover.

CARTER THERMO-QUAD®

1. Remove the bowl cover from the main body of the carburetor.
2. Invert the bowl cover.
3. With the bowl cover gasket in place and the floats resting on the seated needle, measure the distance from the bowl cover gasket to the bottom side of the float (now on top since the bowl cover is inverted). The distance should be 1-1/16 in.
4. Adjust the float level by bending the lever the float is connected to. Never allow the lip of the float to be pressed against the needle when adjusting the float level.
5. Install the fuel bowl cover to the main body of the carburetor.

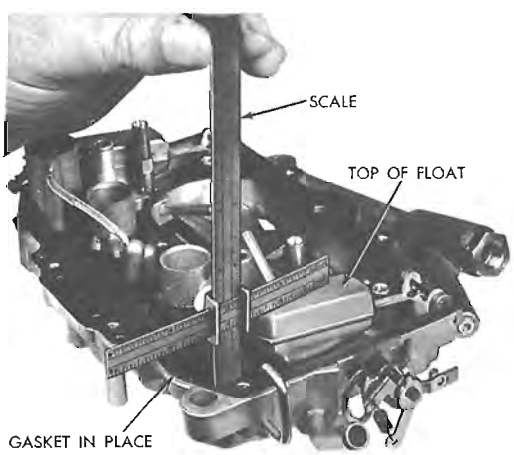

Checking the fuel float level on the Carter Thermo-Quad carburetor

Fast Idle Adjustment

ALL CARBURETORS

1. Run the engine until it has reached normal operating temperature. Adjust ignition timing, the curb idle speed and mixture as necessary.

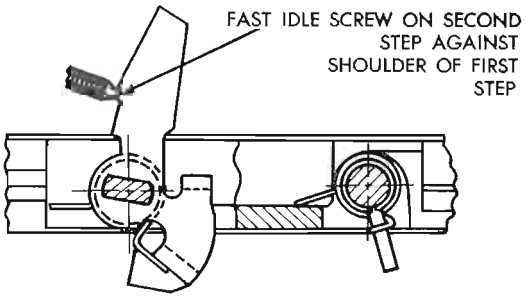

Fast idle speed adjustment on the Carter Thermo-Quad carburetor

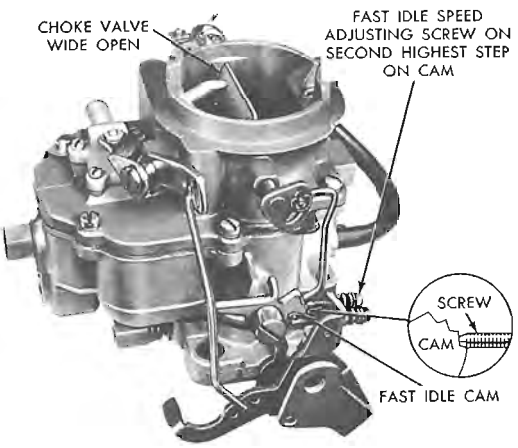

Fast idle speed adjustment on the Carter BBD carburetor

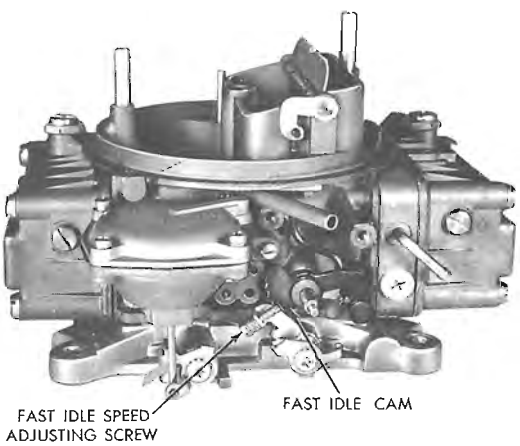

Fast idle speed adjustment on the Holley 4-bbl carburetors. The choke assembly is removed to show location

2. Turn off the engine and remove the engine cover and air cleaner assembly.
3. Open the throttle slightly and close the choke valve until the fast idle screw can be positioned on the second highest speed step of the fast idle cam.
4. Connect a tachometer and start the

engine and allow it to run for a few minutes to determine a stabilized speed.

5. Turn the fast idle screw in or out to obtain the specified fast idle speed.

6. Remove the tachometer, replace the air cleaner and the engine cover.

Choke Unloader Adjustment

ALL CARBURETORS

1. With the air cleaner removed, hold the throttle valves in the wide-open position. Insert the specified gauge between the upper edge of the choke valve and the inner wall of the air horn.

2. With a finger lightly pressing against the valve, a slight drag should be felt as the gauge is being withdrawn. If an adjustment is necessary, bend the unloader tang on the throttle lever on the Carter BBD carburetor until the correct opening is obtained. On the Holley carburetors, bend the tang which contacts the bottom of the fast idle cam until the correct opening is obtained. On the Carter Thermo-Quad carburetor, adjust by bending the tang on the fast idle control lever until the correct opening is obtained.

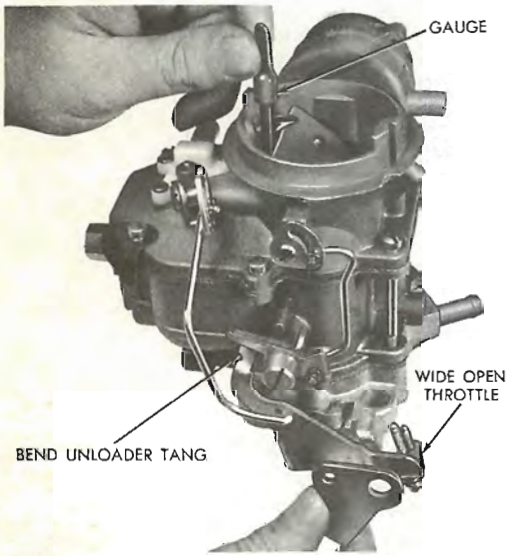

Adjusting the choke unloader on the Carter BBD carburetor

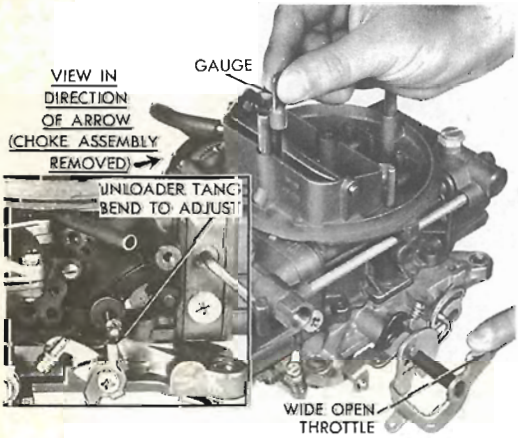

Adjusting the choke unloader on the Holley 4-bbl carburetors

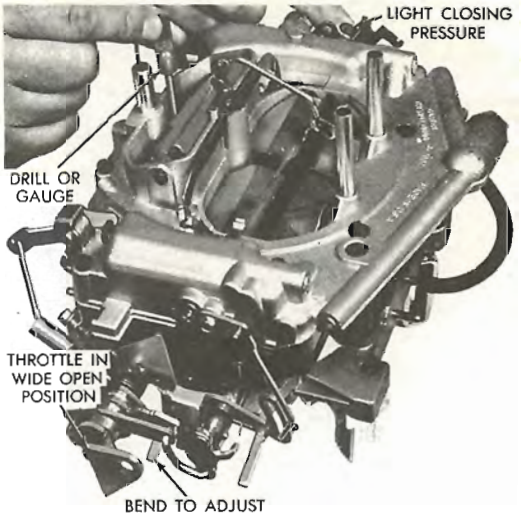

Adjusting the choke unloader on the Carter Thermo-Quad

Choke Control Lever, Diaphragm Connector Rod, and Vacuum Kick Adjustment

CARTER THERMO-QUAD® ONLY

1. Leave the carburetor on the engine and disconnect the choke rod.

2. Close the choke by pushing on the choke lever with the throttle partly open.

3. Measure the vertical distance from the top of the rod hole in the control lever down to the base of the carburetor. The distance should be 3-41/64 in. Adjust by bending the link connecting the two choke shafts.

4. Before adjusting the choke diaphragm connector rod, be sure that the diaphragm is securely mounted on the carburetor.

5. Apply a vacuum of 15 in. Hg or more to fully depress the diaphragm stem. Engine vacuum is sufficient.

6. With the air valve closed, adjust

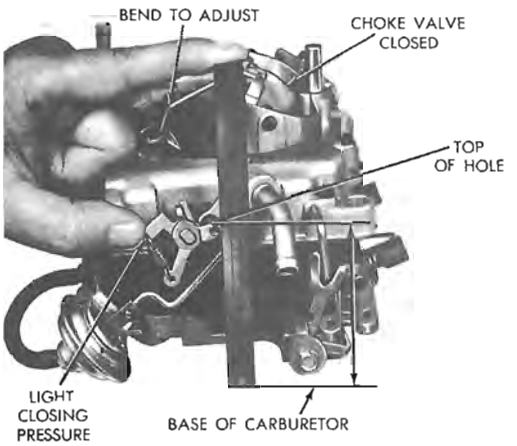

Adjusting the choke control lever on the Carter Thermo-Quad carburetor

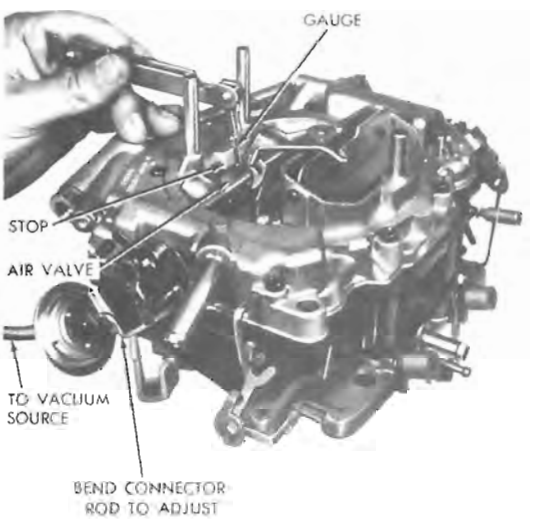

Adjusting the choke diaphragm connector rod on the Carter Thermo-Quad carburetor

the connector rod to give 0.040 in. of clearance between the air valve and the air valve stop.

7. With the engine running, back off the fast idle speed screw until the choke can be closed to the kick position at curb idle. Note the number of turns required so that the fast idle can be returned to its original adjustment.

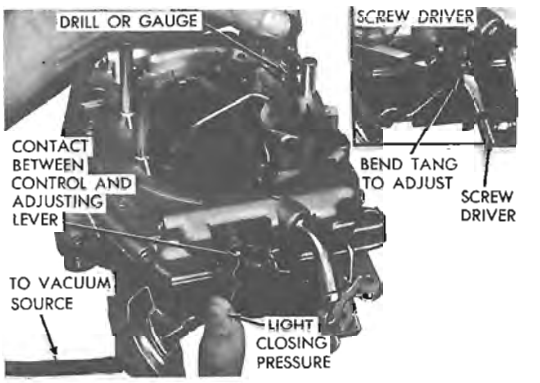

Adjusting the vacuum kick on the Carter Thermo-Quad carburetor

8. Insert a 0.040 in. wire gauge between the long side (lower edge) of the choke valve and the air horn wall. Apply sufficient closing pressure on the choke control lever to provide a minimum choke valve opening without distortion of the choke linkage. Note that only this carburetor extends a spring connecting the control lever to an adjustment lever. This spring must be fully extended for proper measurement of the vacuum kick adjustment.

9. Adjust if a slight drag is not obtained as the gauge is being removed. Bend the tang to change the contact with the diaphragm rod. Do not bend or adjust the diaphragm rod. Adjust the tang only while applying a counter force to the adjustment lever. Counter force can be applied by a screwdriver placed in the U-shaped opening between the lever and shaft.

CAUTION: *Do not load the link connecting the two choke shafts because the Choke Control Lever setting will change.*

10. Return the fast idle screw to its original adjustment. Shut off the engine. With no vacuum applied to the diaphragm the choke valve should move freely. If it doesn't, examine the linkages for misalignment and binding and correct.

Carburetor Specifications

(All measurements given in in.)

Carter 1¼ in. BBD Carburetor (318 V8)

Choke Unloader	Fuel Float Level Adjustment	Fast Idle Speed (rpm)	Part Number of Main Metering Jets
0.250	0.250	1600①	120-440S②

① 1800 rpm in 1973
② 120-300S in 1972; 120-862S in 1973

Holley Four-Barrel Carburetors (413 V8)

Main Metering Jets		Fuel Float Level Setting	Power Valve Number	Fast Idle Speed (rpm)	Choke Unloader (Wide-Open Kick) Adjustment
Primary	Secondary				
①	②	③	#65④	1900	0.074

① #57 and 59 in 1970 and 1971; #58 and 61 in 1972; #572 and 602 in 1973
② #70 and 72 in 1970 and 1971; secondary main metering jets in the 4160C series, R-6231A, carburetors used in 1972 are not removable; 34R and 1993 in 1973
③ Fuel level even with the bottom of the sight plug hole
④ #21 in 1973

Carter Thermo-Quad® Carburetor (440 V8)

Fuel Float Level Adjustment	Secondary Throttle Linkage Adjustment	Secondary Air Valve Opening	Choke Control Lever Adjustment	Choke Diaphragm Connector Rod Adjustment	Vacuum Kick Adjustment	Choke Unloader (Wide-Open Kick) Adjustment	Fast Idle Speed (rpm)	Part Number of Metering Rod
1 1/16	①	29/64	3⅜	0.040②	0.160	0.190	1800	75-1966

① Adjust the link so that the primary and secondary stops both contact at the same time
② Clearance between the air valve and stop

5 · Chassis Electrical

Understanding and Troubleshooting Electrical Systems

DC AUTOMOTIVE SYSTEMS

For any electrical system to operate, it must make a complete circuit. This simply means that the power flow from the battery must make a complete circle. When an electrical component is operating, power flows from the battery to the component, passes through the component causing it to perform its function (lighting a light bulb), and then returns to the battery through the ground of the circuit. This ground is usually (but not always) the metal part of the car on which the electrical component is mounted.

Perhaps the easiest way to visualize this is to think of connecting a light bulb with two wires attached to it to your car battery. The battery in your car has two posts (negative and positive). If one of the two wires attached to the light bulb was attached to the negative post of the battery and the other wire was attached to the positive post of the battery, you would have a complete circuit. Current from the battery would flow out one post, through the wire attached to it and then to the light bulb, where it would pass through causing it to light. It would then leave the light bulb, travel through the other wire, and return to the other post of the battery.

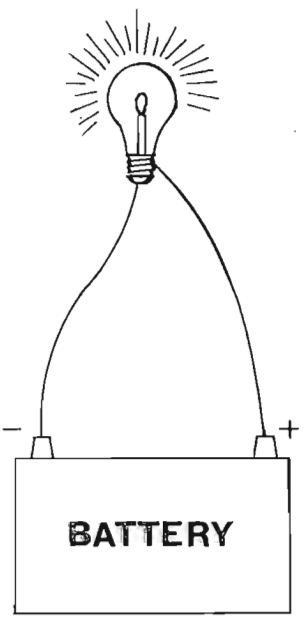

A complete circuit

The normal automotive circuit differs from this simple example in two ways. First, instead of having a return wire from the bulb to the battery, the light bulb returns the current to the battery through the chassis of the vehicle. Since the negative battery cable is attached to the

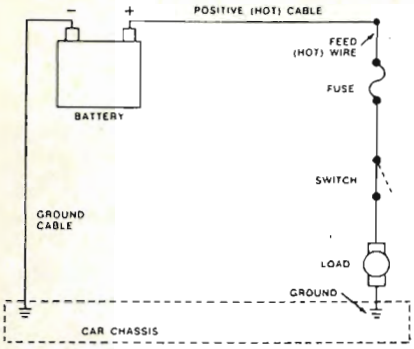

A simple automotive circuit

chassis and the chassis is made of electrically conductive metal, the chassis of the vehicle can serve as a ground wire to complete the circuit. Secondly, most automotive circuits contain switches to turn components on and off as required.

There are many types of switches, but the most common simply serves to prevent the passage of current when it is turned off. Since the switch is a part of the circle necessary for a complete circuit, it operates to leave an opening in the circuit, and thus an incomplete or open circuit, when it is turned off.

Some electrical components which require a large amount of current to operate also have a relay in their circuit. Since these circuits carry a large amount of current, the thickness of the wire in the circuit (gauge size) is also greater. If this large wire were connected from the component to the control switch on the instrument panel, and then back to the component, a voltage drop would occur in the circuit. To prevent this potential drop in voltage, an electromagnetic switch (relay) is used. The large wires in the circuit are connected from the car battery to one side of the relay, and from the opposite side of the relay to the component. The relay is normally open, preventing current from passing through the circuit. An additional, smaller, wire is connected from the relay to the control switch for the circuit. When the control switch is turned on, it grounds the smaller wire from the relay and completes the circuit. This closes the relay and allows current to flow from the battery to the component. The horn, headlight, and starter circuits are three which use relays.

Did you ever notice how your instrument panel lights get brighter the faster your car goes? This happens because your alternator (which supplies the battery) puts out more current at speeds above idle. This is normal. However, it is possible for larger surges of current to pass through the electrical system of your car. If this surge of current were to reach an electrical component, it could burn it out. To prevent this from happening, fuses are connected into the current supply wires of most of the major electrical systems of your car. The fuse serves to head off the surge at the pass. When an electrical current of excessive power passes through the component's fuse, the fuse blows out and breaks the circuit, saving it from destruction.

The fuse also protects the component from damage if the power supply wire to the component is grounded before the current reaches the component.

Let us here interject another rule to the complete circle circuit. *Every complete circuit from a power source must include a component which is using the power from the power source.* If you were to disconnect the light bulb (from the previous example of a lightbulb being connected to the battery by two wires) from the wires and touch the two wires together (please take my word for this; don't try it), the result would be shocking. A similar thing happens (on a smaller scale) when the power supply wire to a component or the electrical component itself becomes grounded before the normal ground connection for the circuit. To prevent damage to the system, the fuse for the circuit blows to interrupt the circuit—protecting the components from damage. Because grounding a wire from a power source makes a complete circuit—less the required component to use the power—this phenomenon is called a short circuit. The most common causes of short circuits are: the rubber insulation on a wire breaking or rubbing through to expose the current carrying core of the wire to a metal part of the car, or a shorted switch.

Some electrical systems on the car are protected by a circuit breaker which is, basically, a self-repairing fuse. When either of the above-described events takes

place in a system which is protected by a circuit breaker, the circuit breaker opens the circuit the same way a fuse does. However, when either the short is removed from the circuit or the surge subsides, the circuit breaker resets itself and does not have to be replaced as a fuse does.

The final protective device in the chassis electrical system is a fuse link. A fuse link is a wire that acts as a fuse. It is usually connected between the starter relay and the main wiring harness for the car. This connection is under the hood, very near a similar fuse link which protects the engine electrical system. Since the fuse link protects all the chassis electrical components, it is the probable cause of trouble when none of the electrical components function, unless the battery is disconnected or dead.

Electrical problems generally fall into one of three areas:

1. The component that is not functioning is not receiving current.
2. The component itself is not functioning.
3. The component is not properly grounded.

Problems that fall into the first category are by far the most complicated. It is the current supply system to the component which contains all the switches, relays, fuses, etc.

The electrical system can be checked with a test light and a jumper wire. A test light is a device that looks like a pointed screwdriver with a wire attached to it. It has a light bulb in its handle. A jumper wire is a piece of insulated wire with an alligator clip attached to each end. To check the system you must follow the wiring diagram of the vehicle being worked on. A wiring diagram is a road map of the car's electrical system.

If a light bulb is not working, you must follow a systematic plan to determine which of the three causes is the villain.

1. Turn on the switch that controls the inoperable bulb.
2. Disconnect the power supply wire from the bulb.
3. Attach the ground wire on the test light to a good metal ground.
4. Touch the probe end of the test light to the end of the power supply wire that was disconnected from the bulb. If the bulb is receiving current, the test light will glow.

NOTE: *If the bulb is one which works only when the ignition key is turned on (turn signal), make sure that the key is turned on.*

If the test light does not go on, then the problem is in the circuit between the battery and the bulb. As mentioned before, this includes all the switches, fuses, and relays in the system. Turn to the wiring diagram and find the bulb on the diagram. Follow the wire that runs back to the battery. The problem is an open circuit between the battery and the bulb. If the fuse is blown and, when replaced, immediately blows again, there is a short circuit in the system which must be located and repaired. If there is a switch in the system, bypass it with a jumper wire.

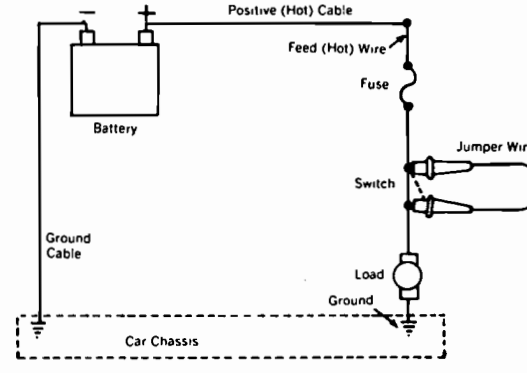

By-passing a switch with a jumper wire

This is done by connecting one end of the jumper wire to the power supply wire into the switch and the other end of the jumper wire to the wire coming out of the switch. Again, consult the wiring diagram. If the test light lights with the jumper wire installed, the switch or whatever was bypassed is defective.

NOTE: *Never substitute the jumper wire for the bulb, as the bulb is the component required to use the power from the power source.*

5. If the bulb in the test light goes on, then the current is getting to the bulb that is not working in the car. This eliminates the first of the three possible causes. Connect the power supply wire and connect a jumper wire from the bulb to a good metal ground. Do this with the switch

which controls the bulb turned on, and also the ignition switch turned on if it is required for the light to work. If the bulb works with the jumper wire installed, then it has a bad ground. This is usually caused by the metal area on which the bulb mounts to the car being coated with some type of foreign matter.

6. If neither test located the source of the trouble, then the light bulb itself is defective.

The above test procedure can be applied to any of the components of the chassis electrical system by substituting the component that is not working for the light bulb. Remember that for any electrical system to work, all connections must be clean and tight.

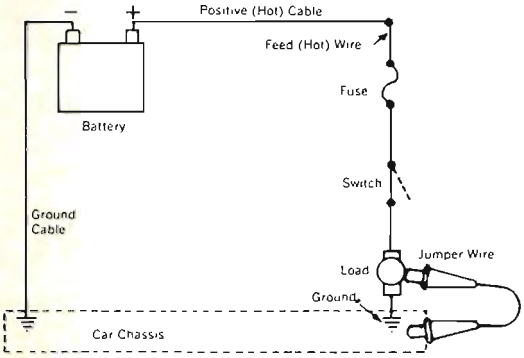

Checking for a bad ground with a jumper wire

AC HOUSEHOLD SYSTEMS

Although there are some similarities between DC and AC electrical systems as far as system components and troubleshooting procedures, an AC system is a bit more complicated and a lot more dangerous to work on.

If trouble arises with the AC electrical system, chances are that the problem is with the appliance being operated by the AC current. If a circuit breaker is thrown repeatedly when an appliance is activated, then you can assume the appliance is at fault. Troubleshooting electrical appliances can obviously not be covered here. If the appliance should suddenly fail, along with all other components being operated on AC current, one can assume that the problem lies with the source of supply. Unless you are operating under your auxiliary power plant, there is little that you can do other than switch over to your DC power supply or light a candle. If appliances are known to be in operating condition but do not operate and you know that the supply of current is available, then the trouble lies between the power source connection and the appliance. It is recommended that unless you are knowledgeable and proficient in repairing electrical systems of this type that you not attempt to troubleshoot or perform any repairs. Have any repairs needed performed by authorized personnel equipped to handle motor homes.

Driver's Compartment and Windshield Defroster Heater Unit

Removal and Installation

1. Drain the engine cooling system enough to lower the coolant level to a point below the heater unit.
2. Loosen all hose clamps on the air and coolant hoses and remove the hoses from the unit. Some water may run out of the hoses, so be prepared to catch or absorb it.
3. Remove the screws holding the mounting bracket on the left-side of the unit to the floor.
4. Remove the screws, nuts, and lockwashers securing the right-side of the heater unit to the mounting bracket.
5. Pull the heater out and remove the control cable by loosening the screw of the cable end clamp and removing the screw from the cable locating clamp on top of the unit.
6. Disconnect all electrical wiring to the unit and remove the unit.
7. Install the heater unit in the reverse order of removal. Be sure to replenish the coolant supply.

Radio

Removal and Installation

1. Remove the antenna lead by unplugging it from the back of the radio.

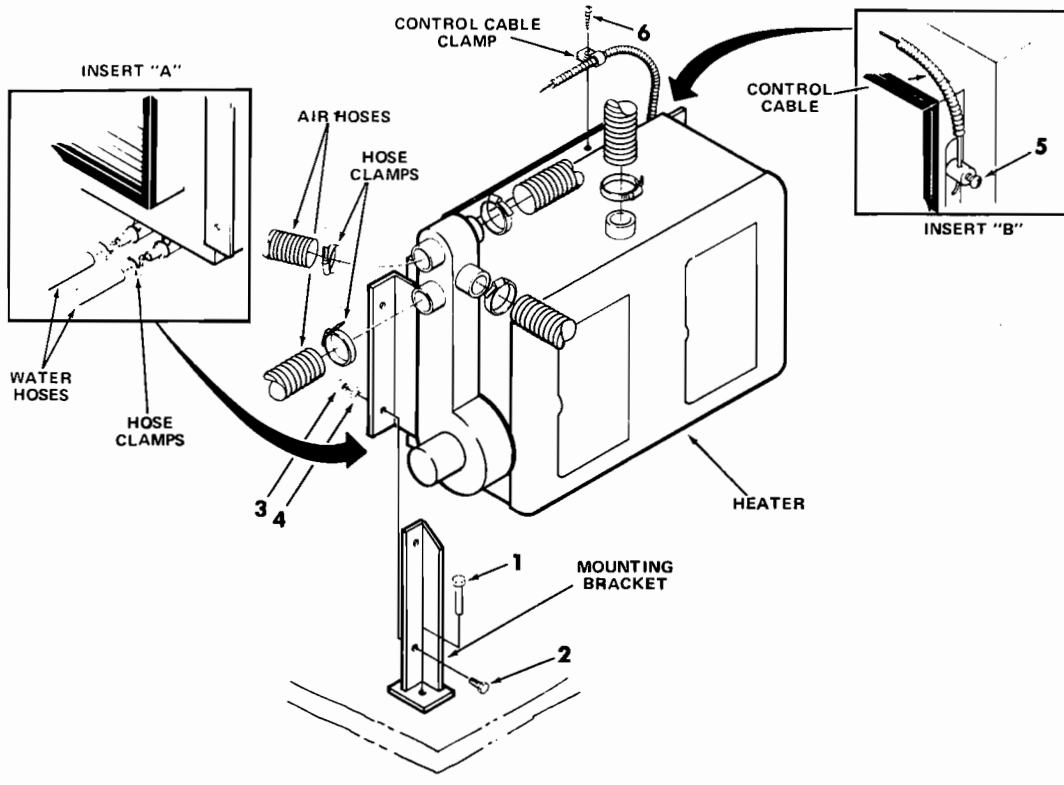

The driver's compartment and windshield defroster heater unit

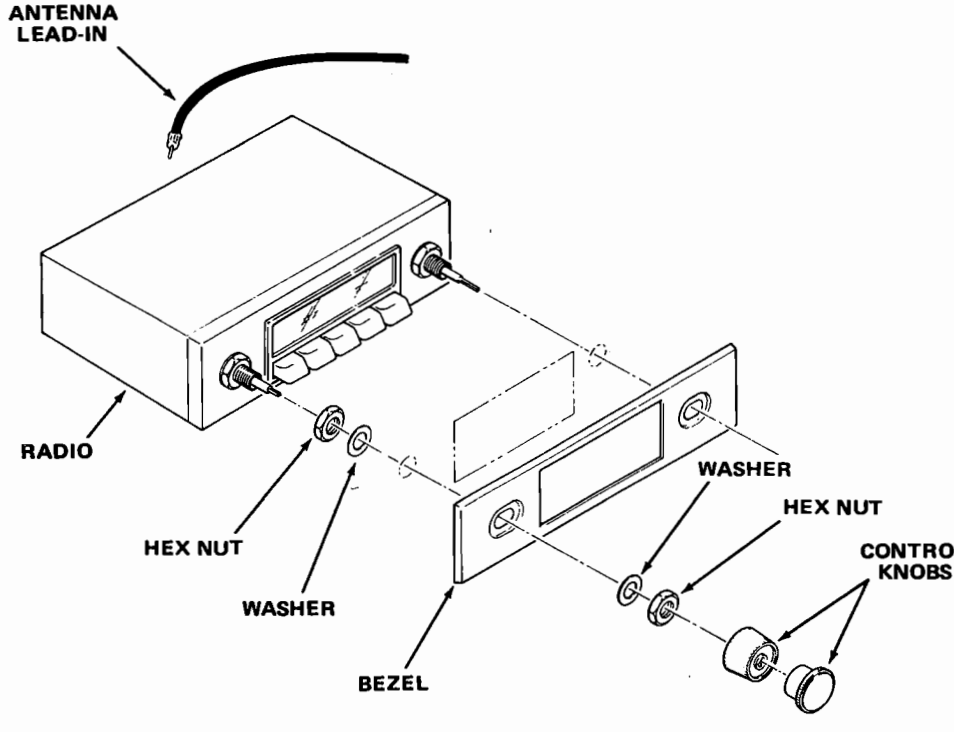

Radio installation

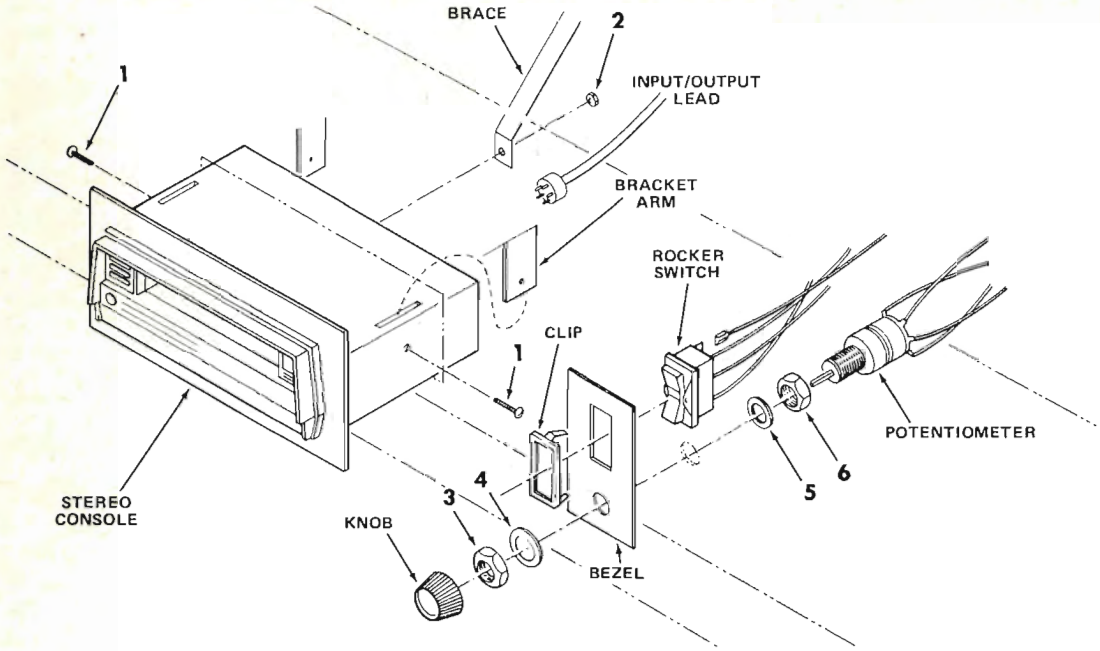

Stereo tape player installation

2. Disconnect all electrical leads from the radio.

3. Pull the control knobs from their shafts at the front of the radio.

4. Remove the two nuts and washers at the control shafts and remove the mounting bezel.

5. Remove the radio from the back side of the dashboard.

6. Install the radio in the reverse order of removal.

NOTE: *To remove stereo tape players mounted in the dash, remove the retaining nuts and screws holding the unit to the mounting bracket, drop the unit down to clear the bracket and remove the unit through the front of the dashboard.*

Instrument Cluster

Removal and Installation

STANDARD DODGE CLUSTER

1. Disconnect the negative battery cable from the battery.

2. Remove the screws attaching the instrument cluster to the instrument panel.

3. Disconnect the speedometer cable at the instrument panel end.

4. Disconnect the lead wires to the instrument cluster. Label all of the leads to insure correct reinstallation.

5. Remove the cluster.

6. Install the instrument cluster in the reverse order of removal

NOTE: *The temperature gauge and the fuel gauge are connected in parallel. Both gauges are electro-thermal devices, operating on a constant voltage supplied by a voltage limiter located inside the fuel gauge case.*

TELEFLEX INSTRUMENT CLUSTER

The Teleflex instrument cluster is removed in the same manner as the standard Dodge cluster. However, the Teleflex cluster need not be removed to remove any of the gauges and meters. To remove any of the instruments, simply disconnect the electrical lead, cable or hose, remove the attaching screws from the supporting bracket at the rear of the panel and remove the instrument from the front of the panel.

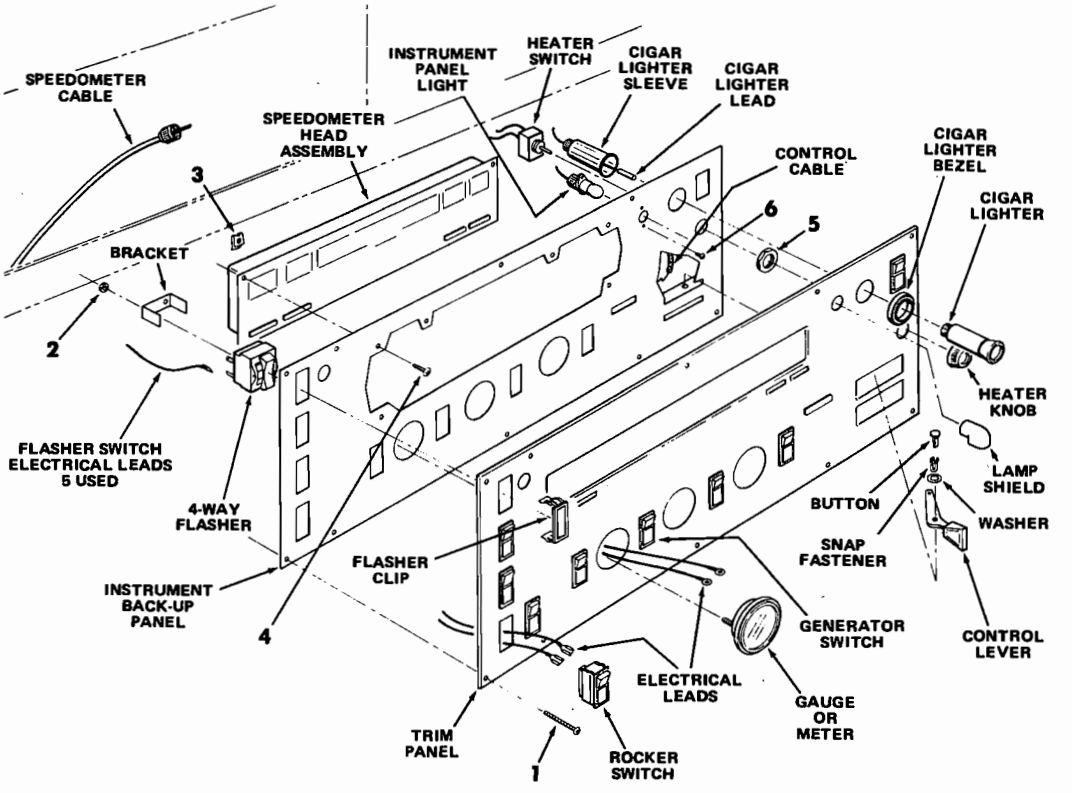

An exploded view of the standard Dodge instrument panel

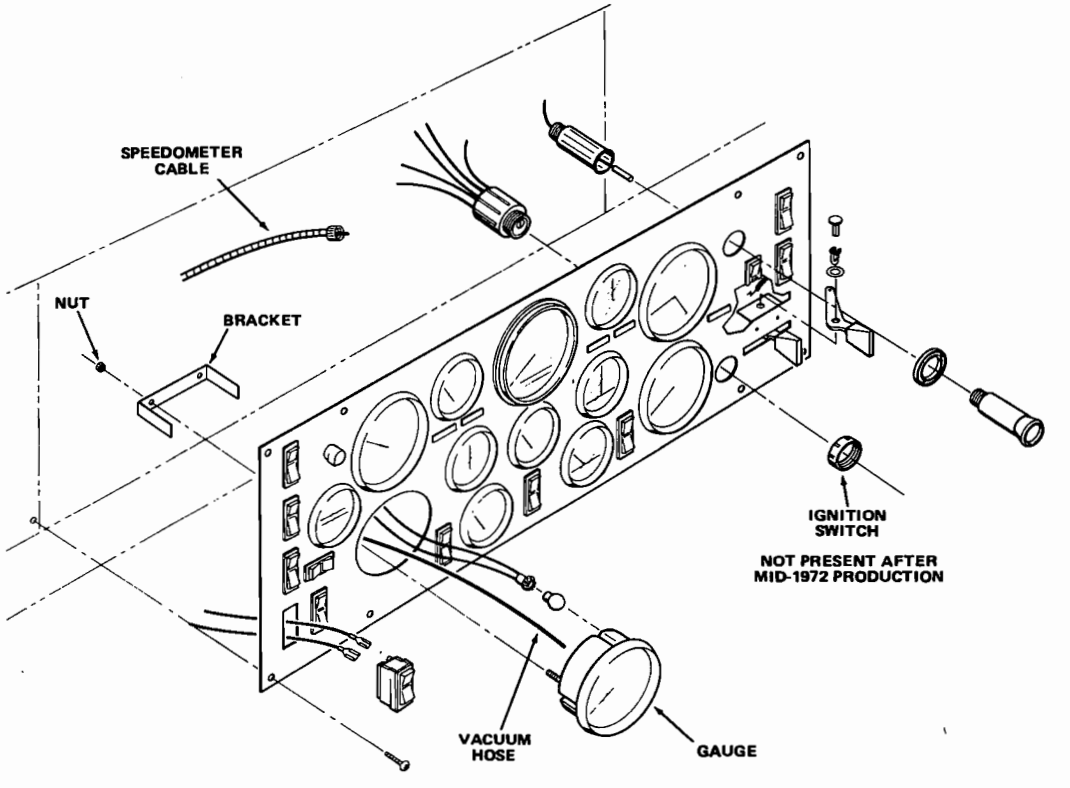

An exploded view of the Teleflex instrument panel

Lighting System (Headlights)

Removal and Installation

1. Remove the front trim ring by removing the single screw located at the bottom of the ring.
2. Remove the screws from the headlight retaining ring and remove the ring.
3. Allow the headlight to fall out of its mounting and disconnect the plug from the rear of the light.
4. Connect the plug to the rear of the new light.
5. Install the light in its mounting with the 3 tabs around the outside edge of the light located in their respective slots in the headlight mounting.
6. Install the headlight retaining ring and the front trim ring in the reverse order of removal.

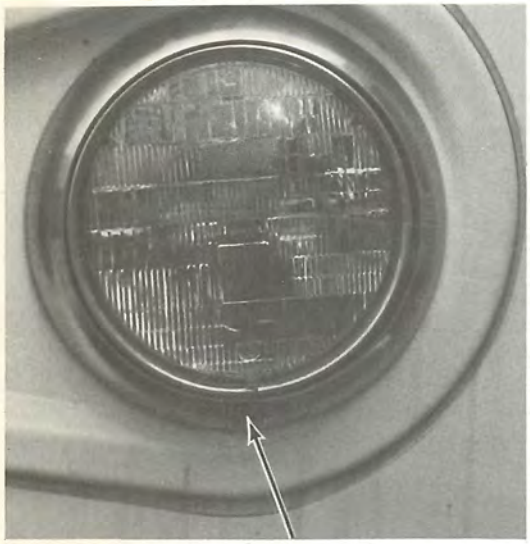

Trim ring retaining screw (arrow)

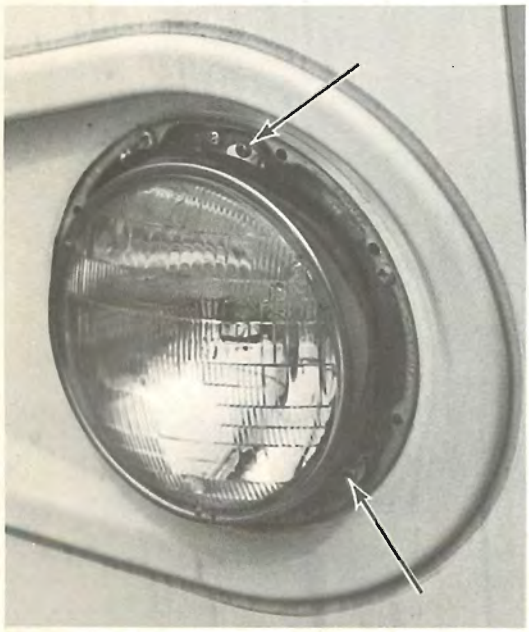

Retaining ring attaching screws (arrows)

Automotive Light Bulb Specifications

Lamp	*Trade Number*
Headlights	6012
Parking Light	67
Turn Signal	1073
Back-up Light	1073
Stop, Tail and Turn Signal	1034
Instrument Panel Lights	57
Brake Indicator Light	57
High Beam Indicator Light	57
Oil Pressure Indicator Light	57
Radio Dial Light	57
Turn Signal	57

Generators (Auxiliary Power Supply)

Winnebago motor homes use Onan, LK and CCK model, auxiliary generators. The LK series are single-cylinder models and the CCK series are two-cylinder, horizontally-opposed models.

Automotive Fuses

Year	Circuit	Fuse Amperage
Prior to 1972	Heater	20
	Radio	6
	Instrument Lights	2
	Emergency Flashers and Cigar Lighter	20
	Horns	30
	Turn Signals	15
	Tail, Stop, Dome and Parking Lights	20
1972 and After	Radio	7½
	Turn Signals, Gauges and Brake Warning Light	20
	Heater and Air Conditioning	20
	Ignition Accessories	20
	Horn and Back-up Lights	20
	Tail, Park, Side Marker and License Lights	20
	Battery Accessories	20
	Dome and Ignition Lights	20
	Stop Lights and Hazard Warning Lights	20
	Instrument Lights	2

SERVICE AND MAINTENANCE

In the following paragraphs some routine maintenance procedures are mentioned. These can be performed by anyone with a basic knowledge of mechanics and a limited supply of tools.

Any generator installed in a motor home needs a strict and complete maintenance schedule. Keep in mind that an hour of running time on a generator is equivalent to 40–80 miles of driving on a car engine. The need for regular maintenance is obvious.

Engine Oil

Use a high quality detergent motor oil which meets the American Petroleum Institute (API) service designations SE or SE/CC (formerly MS, MS/DG). The engine oil should be checked every 8 hours of operation and changed every 100 hours; sooner if the unit is operated under extremely dusty or low temperature conditions. Do not use service DS rated oil. Also, try not to mix brands or grades of oil.

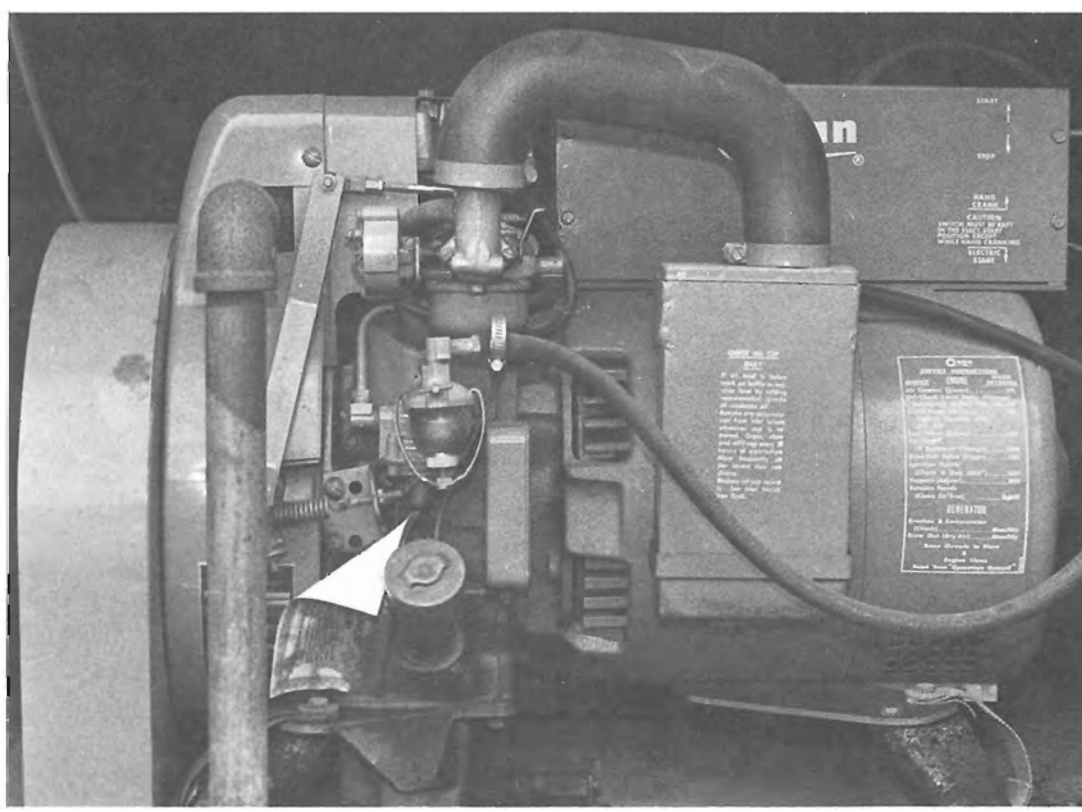

An Onan LK Series power plant

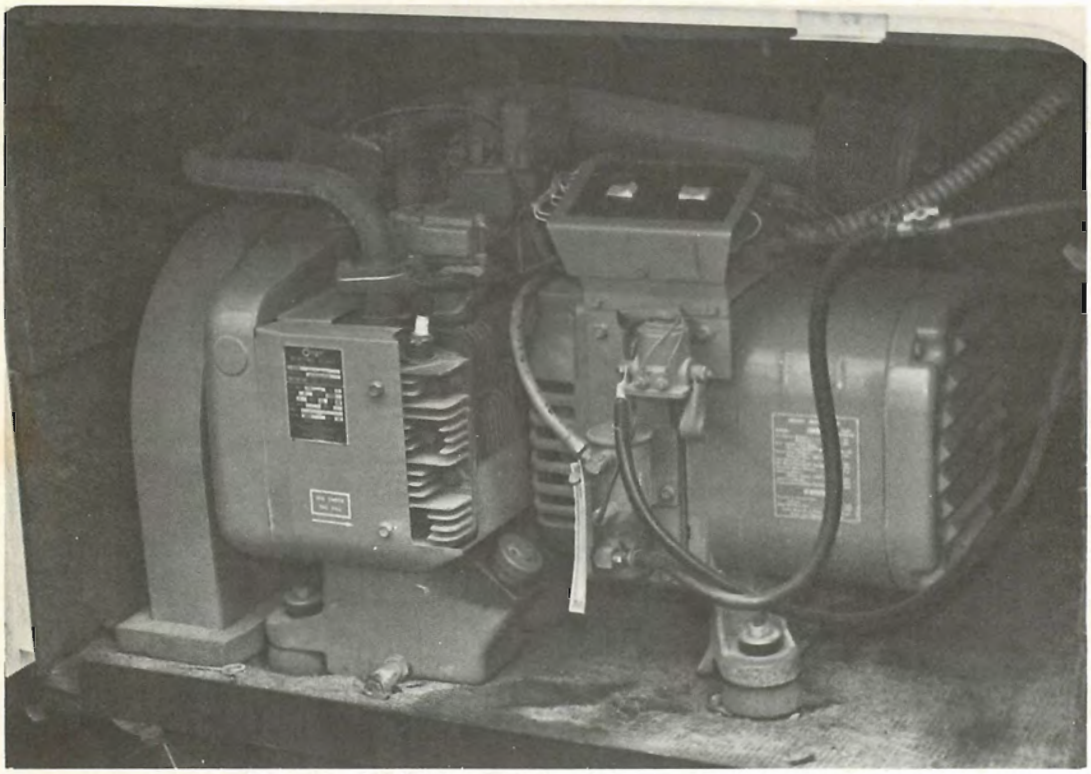

An Onan CCK Series power plant

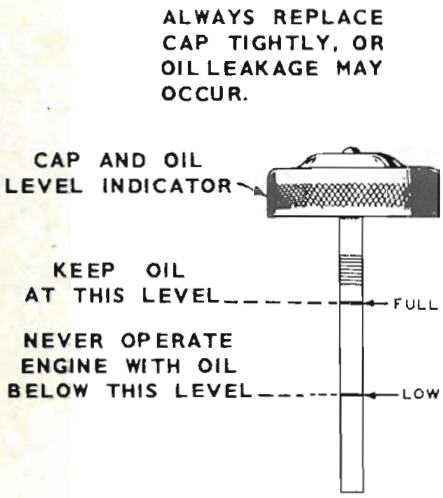

Oil level dipstick

Use the proper weight (SAE) oil in relation to the sustained ambient temperatures expected until the next oil change.

The crankcase oil capacity of the LK unit is 2 U.S. quarts; 4 quarts on the CCK unit.

Recommended Oil Viscosity Chart

Temperature	*Oil SAE*
Above 90° F	50 (LK only)
32° F to 90° F	30
0° F to 32° F	10W or 5W–20 (CCK only) 10W–40 or 5W–30 (LK only)
Below 0° F	5W–20 (CCK only) 5W–30 (LK only)

Crankcase Breather

CCK Series

The crankcase breather should be cleaned every 200 hours. To clean the crankcase breather, lift off the rubber breather cap and carefully pry the breather valve from the cap. Wash the

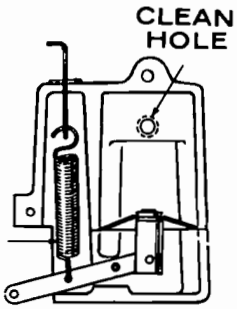

The vacuum booster mechanism on the CCK series only

when the unit is operating at no load or light load, it may be due to improper adjustment, restricted hole in the small vacuum tube, or a leak in the booster diaphragm or gasket.

Governor Linkage

The linkage must be able to move freely through its entire travel range. Clean all of the joints in the linkage every 50 hours of operation. On the CCK series, lubricate the joints with a light coating of oil after cleaning them. On the LK series DO NOT lubricate the plastic ball joints; just clean them. Also, inspect the linkage for binding, excessive slack and wear.

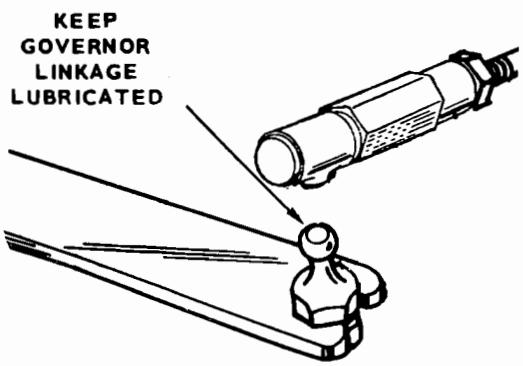

The governor linkage on the CCK series

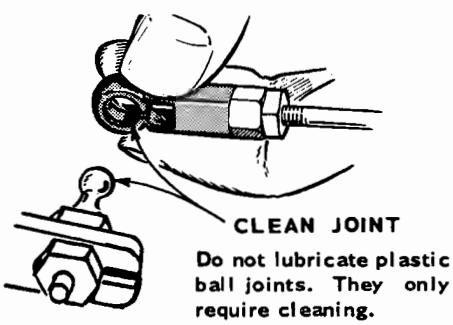

The governor linkage on the LK series

Fuel Sediment

CCK SERIES

After every 100 hours of operation, drain the fuel pump and check the filter element. Turn the nut on the base of the electric fuel pump to gain access to the filter element. If the element appears to be dirty, replace it with a new one. Install the fuel filter element in the reverse order of removal.

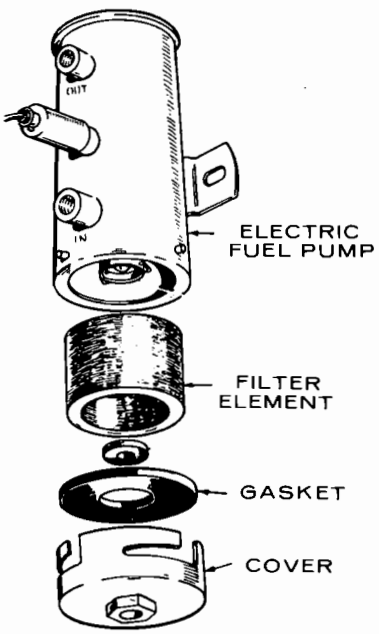

The fuel filter on the CCK series

LK SERIES

Empty the carburetor and fuel filter strainer bowls of any accumulated sediment every 200 hours. Clean the filter screen thoroughly. Reassemble the bowls in the reverse order of disassembly and check for leaks.

ADJUSTMENTS

Breaker Points

The breaker points should be checked and or replaced every 200 hours of operation.

1. Remove the breaker box cover to gain access to the points.
2. Remove the spark plug(s) so that the engine can be easily rotated by hand.
3. Pry the point contacts apart gently with a small screwdriver and examine the

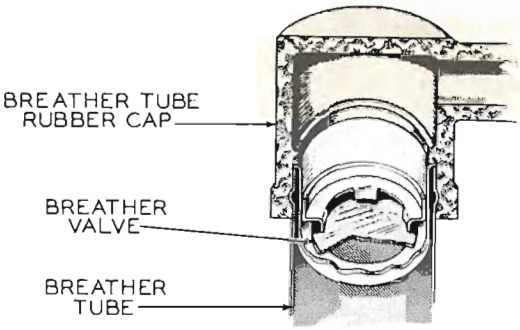

A cutaway view of the crankcase breather for CCK engines

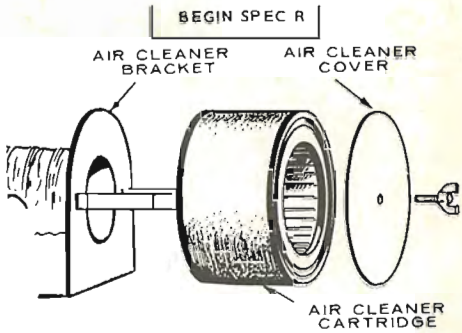

The foam strip and paper element type air cleaner

valve in a suitable solvent, dry it with compressed air and install the valve back into the cap. Position the perforated disc toward the engine.

LK Series

Remove the crankcase breather hose from the valve compartment cover. Remove the valve from the end of the hose or the valve compartment cover, depending on where it remained when the hose was removed. Wash the valve in kerosene or other suitable solvent, dry it with compressed air and replace the valve and breather hose.

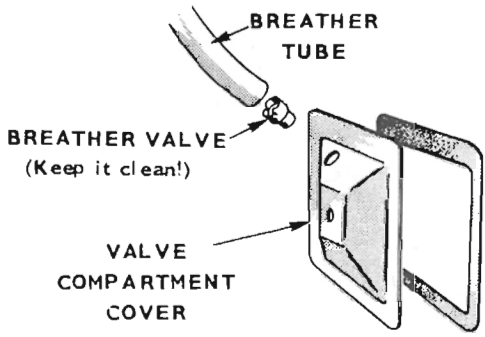

The crankcase breather assembly for LK engines

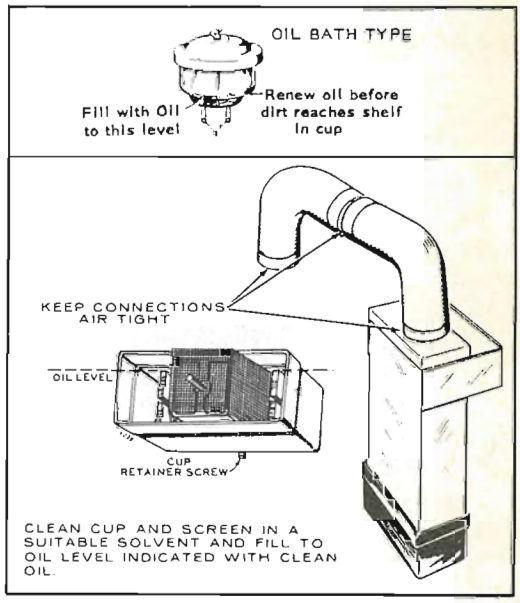

Air cleaner

Air Cleaner

Service the air cleaner every 50 hours.

On those models equipped with a foam and paper element type air cleaner, remove the foam strip and tap the paper element on a clean flat surface to dislodge any dirt particles. Low pressure compressed air can be used to further clean the paper element and foam strip. Direct the air through the filters in the reverse direction of the normal flow. Replace the element every 500 hours; more often if the generator is operated in dusty areas.

On those models with oil bath type air cleaners, remove the air cleaner, clean the screen and cup in a suitable solvent and reinstall the air cleaner. Fill the air cleaner with the same oil as is installed in the crankcase to the level indicated on the cup. Service oil bath air cleaners every 50 hours of operation; sooner if the unit is operated in dusty areas.

Speed Booster

CCK Series Only

Use a fine wire to clean the small hole in the short vacuum tube which fits into the hole in the top of the engine intake manifold. Do not enlarge this hole. If there is tension on the external spring

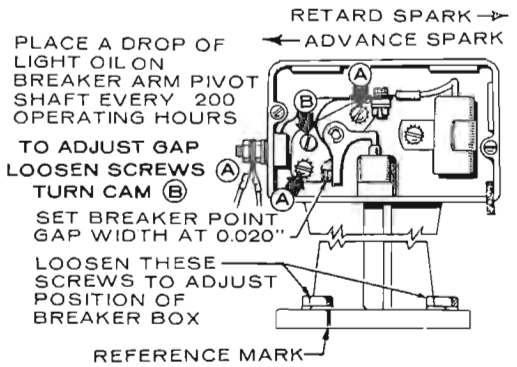

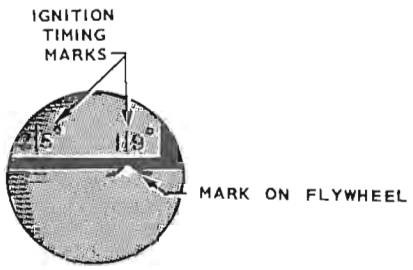

The breaker box/points assembly and timing marks on the CCK series

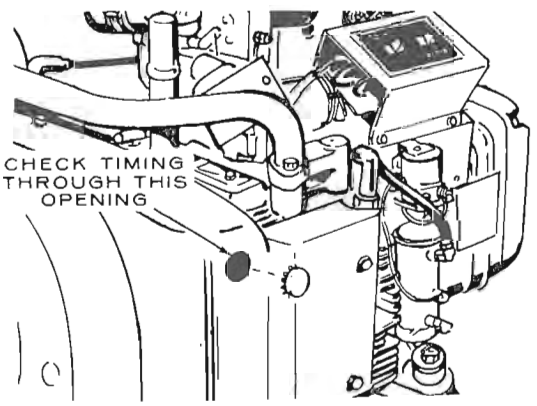

The timing mark access hole on the CCK series

condition of the contacts. If the points appear to be severely burned, pitted or worn they should be replaced. Points that are just slightly burned or pitted can be reconditioned by filing the contact surfaces square and smooth.

4. Turn the flywheel clockwise until the breaker points are in the fully open position. Loosen the two stationary contact mounting screws and turn the adjusting cam screw to move the stationary contacts to obtain a gap of 0.020 in. between the stationary contact and the movable contact; measured with a blade type feeler gauge.

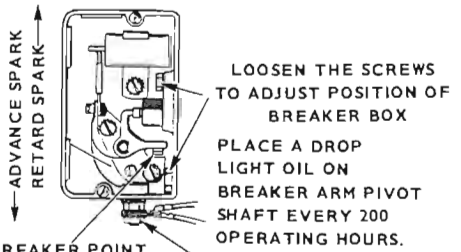

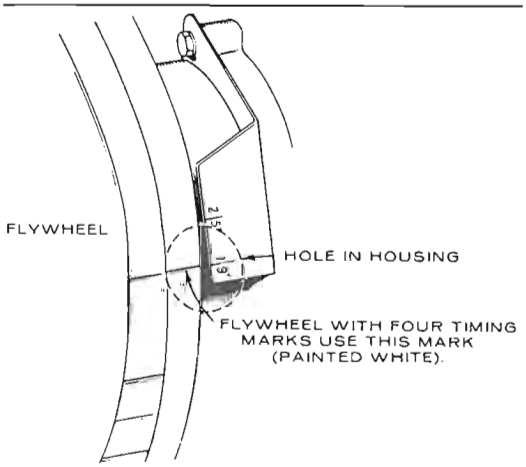

The breaker box/points assembly and the timing marks on the LK series

5. Tighten the mounting screws and recheck the point gap to make sure that the gap didn't change when the mounting screws were tightened.

6. Place a drop of light oil on the movable contact breaker pivot arm shaft. Do not replace the breaker box cover until the ignition timing is adjusted.

Ignition Timing

Both spark plugs on the CCK unit fire at the same time. The spark plugs on both LK and CCK series engines fire at 19° BTDC. You should always check the ignition timing after replacing or readjusting the points. Changing the breaker point gap affects the ignition timing; changing the ignition timing does not affect the breaker point gap.

To accurately check the ignition timing, a timing light, used while the engine is running, is best. Connect the timing light according to the manufacturer's instructions, remove the sight plug from the timing mark viewing hole, start the engine and check the timing.

As a preliminary check or if a timing light is not available, the ignition timing

can be checked and adjusted accurately with a simple continuity light. Connect the continuity light across the points. Connect one lead of the test light to the breaker box terminal to which the coil lead is connected and touch the other lead of the test light to a good ground on the engine. Turn the crankshaft in the opposite direction of normal rotation until the points close. Then, slowly turn the crankshaft in the direction of normal rotation. The test light should glow when the points are closed and go out when the points open. The points should open when the timing mark on the flywheel arrives at the 19° BTDC mark, and consequently, the test light will go out.

Adjust the ignition timing by loosening the breaker box mounting screws slightly and moving the entire breaker box assembly either to the right or left on the CCK series (retard or advance respectively) or up or down on the LK series (retard or advance respectively). Tighten the breaker box mounting screws and recheck the ignition timing to make sure that it didn't change when the mounting screws were tightened.

Carburetor

Gasoline Type Carburetors

The carburetor on both LK and CCK series engines have adjustable idle jets and main jets. The idle jet affects operation of the engine when it is under no load and the main jet affects engine operation under heavy load conditions. Under normal circumstances, the factory carburetor adjustments should not be disturbed. Should the engine run unevenly at half or full load, the problem could possibly be cured by adjusting the main jet. A "hunting" condition (alternate increase and decrease in engine speed) at no load can sometimes be adjusted by adjusting the idle jet. All final adjustments should be made with the engine at normal operating temperatures.

As a preliminary adjustment, to start the engine, turn the adjustment needles in until they are LIGHTLY seated and then turn them out 1 to 1½ turns to permit starting.

NOTE: *Forcing the needles in against their seats will damage the tips of the needles. The needle does not completely shut off the flow of fuel when it is turned in fully.*

To set the idle adjustment, connect a tachometer to the ignition system per the manufacturer's instructions or connect a frequency meter (Hertz meter or voltmeter) to the generator output. With the engine running and at normal operating temperature, slowly turn the idle adjustment out until the engine speed or generator frequency drops slightly. Then, turn the needle in until the idle speed or frequency returns to normal.

To set the main jet adjustment, apply a full electrical load to the generator and

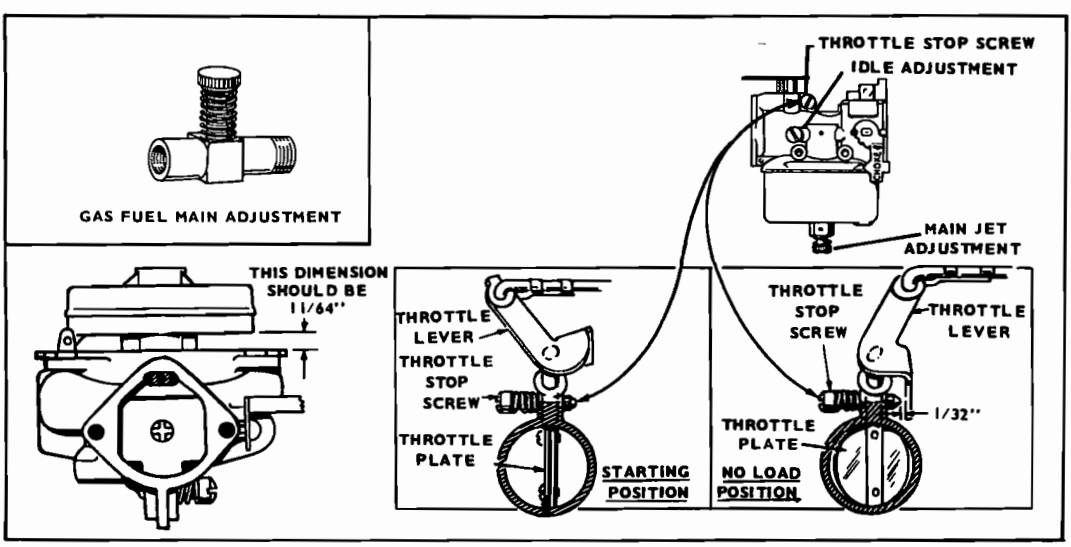

Carburetor adjustments on the LK series

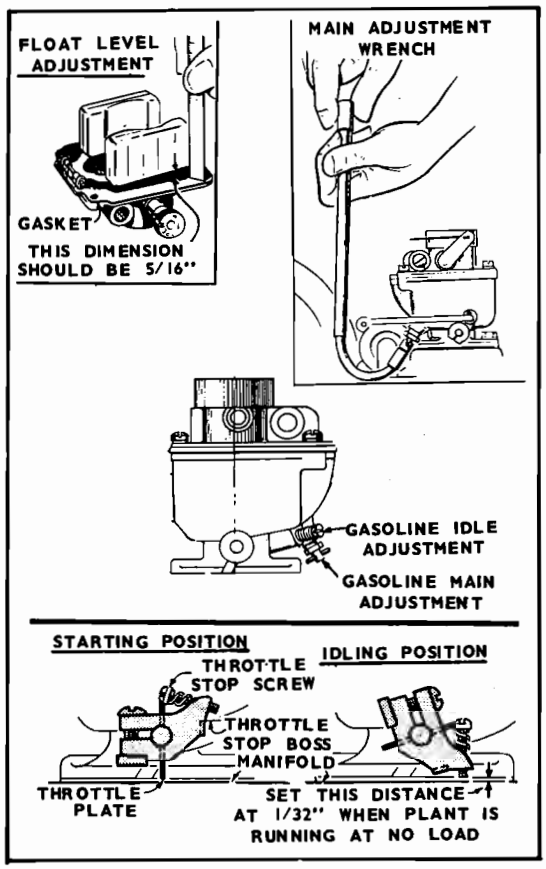

Carburetor adjustments on the CCK series

turn the main jet adjusting screw in until the engine speed or output frequency drops slightly below normal. Then turn the needle out until the speed or frequency returns to normal.

The operating speed of both LK and CCK units is 1800 rpm and the generator output frequency; 60 Hertz (cycles).

NOTE: *Proper carburetor adjustment cannot be assured unless the governor is known to be properly adjusted.*

Gaseous Fuel Type Carburetors

Adjust these carburetors in the same manner as gasoline type carburetors. The adjustment is made with the adjustment screw at the fuel inlet of the carburetor. Gaseous-only carburetors have no idle adjustment on engines made with Spec E and later on LK series. Find the Spec letter on the engine identification plate; the last digit in the Model and Spec number.

Governor

The governor controls the engine speed so that the speed remains constant whether the engine is operating under a load or no load. Engine speed determines the output voltage and current frequency of the generator. A small drop in speed, not noticeable without instruments, will cause an objectionable drop in output voltage.

A binding in the bearings of the shaft which extends from the gear cover, in the ball joint, or in the carburetor throttle assembly will cause slow governor action or poor regulation. Looseness or excessive wear in the governor mechanism will cause erratic governor action or an alternate increase and decrease in speed (hunting). A slightly lean carburetor adjustment can also be the cause of hunting. (Do not turn either carburetor adjusting screw more than ½ of a turn to correct a hunting condition). Springs of all types have a tendency to lose their calibrated tension after prolonged usage through fatigue. If after adjusting the governor and the carburetor governor action is still erratic, replace the spring and readjust the governor.

LK Series

When the engine is stopped, the tension of the governor spring should hold the carburetor throttle arm at the wide-open position. At the wide-open position, the lever on the throttle shaft should just touch the carburetor body or clear it by no more than 1/32 in. This setting can be obtained by either increasing or decreasing the length of the connecting linkage as necessary by turning the ball joint on the threads of the link. This synchronizes the governor action with the carburetor throttle action.

With a voltmeter connected to the output of the generator and no load applied, start the engine and adjust the speed adjusting nut to give a voltmeter reading of about 126 volts maximum. Apply a full rated electrical load and again observe the voltage reading, which should be about 110 volts. The correct sensitivity adjustment gives the closest regulation of voltage without causing a hunting condition. If the voltage range between no load and full load is too great, move the end of the governor spring closer to the governor shaft. If the voltage regulation is good under various load conditions, but there is a tendency to hunt at times, the sensi-

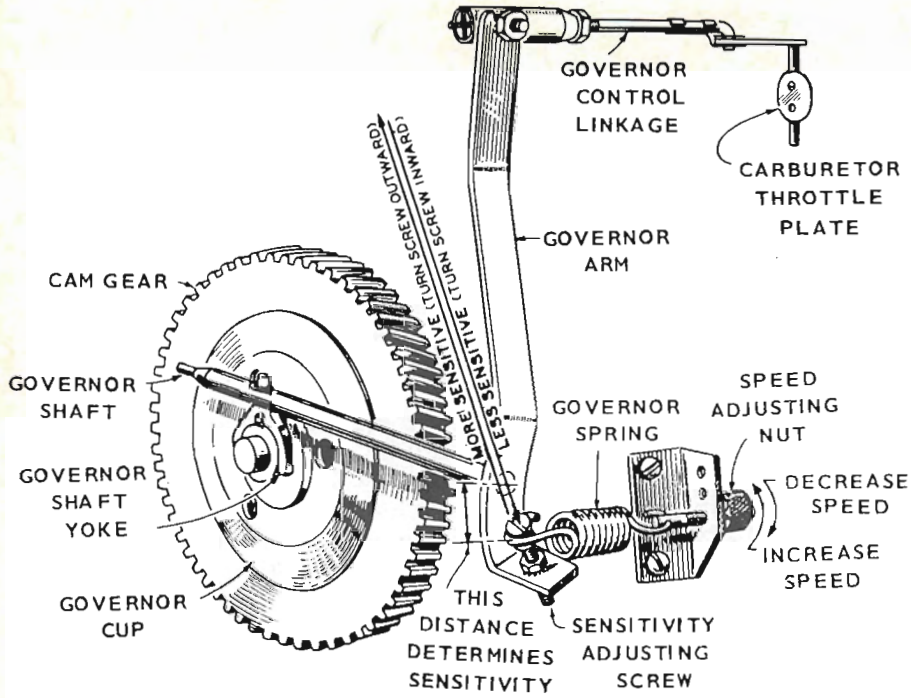

Governor linkage adjustments on the LK series

tivity adjustment is too close and the sensitivity stud must be turned inward slightly. Any change in the sensitivity adjustment will require a change in the speed adjustment.

NOTE: *If a tachometer is used to adjust the governor, adjust the engine speed to 1800 rpm with a variation of no more than 100 rpm between load and no load conditions.*

CCK Series

The engine starts at wide-open throttle. The length of the linkage connecting the governor arm to the throttle shaft and lever is adjusted by rotating the ball joint. Adjust this length so that with the engine stopped and tension on the governor spring, the stop on the carburetor throttle lever just contacts the under-side of the carburetor bowl. This setting allows immediate control by the governor after starting. It also syncronizes the travel of the governor arm and the throttle shaft.

With the engine running with no load at normal operating temperature and with the booster external spring disconnected, adjust the tension of the governor spring. Turn the speed adjusting nut to obtain a voltage and speed reading within the following limits:

Maximum No Load voltage—126
Minimum Full Load Volts—110 (without the booster)
Maximum No Load Speed—1890
Current Frequency (Hertz)—63
Minimum Full Load Speed—1770 (without the booster)
Current Frequency (Hertz)—59

Adjust the sensitivity adjusting clip to find the closest regulation (least speed and voltage difference between no load and full load) without causing a hunting condition. To increase the sensitivity (closer regulation), shift the adjusting clip toward the governor shaft. Too much sensitivity causes hunting. Decrease sensitivity by moving the sensitivity adjusting clip toward the outer end of the governor arm.

Any change in sensitivity adjustment usually requires a change of the speed (spring tension) adjustment.

After satisfactory performance under various loads has been attained by adjusting the governor without the booster, the booster can be connected. Connect the booster external spring to the bracket on the governor link (rod). With the unit

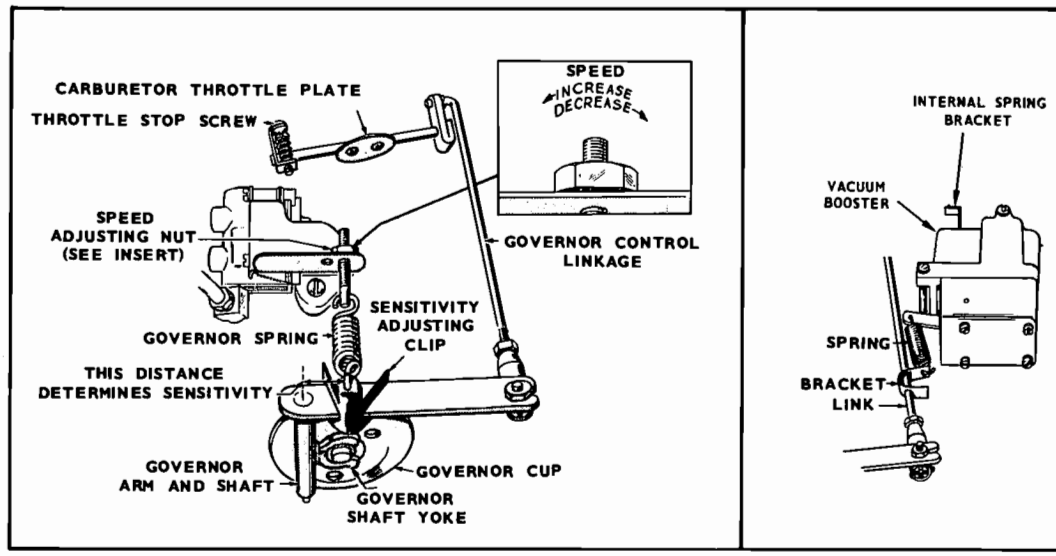

Governor linkage and Speed booster adjustment on the CCK series

operating at no load, slide the bracket on the governor link just to the position where there is no tension on the external spring. Apply a full rated electrical load to the generator. The output voltage should stabilize at nearly the same reading for a full load as for no load operation. The speed may remain about the same or increase when the load is applied, resulting in a frequency 1 or 2 hertz higher than the no load frequency. If the rise in frequency is more than 2 hertz, lessen the internal spring tension. If there is a drop in the frequency, increase the booster internal spring tension. To increase the tension, pull out on the spring bracket and move the pin to a different hole.

With the booster disconnected, a maximum drop of 3 hertz from no load to full load is normal. With the booster in operation, a maximum increase of 2 hertz from no load to full load is normal. A drop of 1 hertz at ¼ load is permissible, giving an overall spread of 3 hertz maximum.

The operation of the booster is dependent on the general condition of the engine. The booster cannot compensate for loss in engine vacuum caused by leaky valves, worn piston rings, etc.

HOW TO CHOOSE THE RIGHT SIZE AUXILIARY POWERPLANT

In order to determine the right size generator, add the total watts of all the appliances, lights, and equipment to be connected to the unit. With lights, heaters, and appliances, simply add the nameplate ratings. For equipment and power tools, check the hp rating and the type of motor.

Some electric motors require more current to start than to run. The starting current varies greatly depending on the type of motor. To start repulsion induction motors require two and one-half times the amount of current it takes to run. Split-phase motors require as much as five times the running current for starting. Universal motors such as the type used in portable power tools and appliances do not require extra starting current—only the running watts are figured.

To compute the number of watts required, if only the amps and volts are given, use the following formula: Amps × Volts = Watts.

Follow these three steps to determine the amount of power which you will need.

1. List the wattage of the lights, heater, appliances, and so forth. (Obtain figures from the nameplate data when possible.)
2. Analyze the motor loads and check for starting watts.
3. Determine which of the loads can be staggered for emergency use. In most cases it is impractical to have a generator that is large enough to handle the total connected load.

Small Appliance Current Requirements

Appliance	*Watts*	*Equipment*	*Watts*
Electric Iron	900	Hand Saw 8 in.	1500
TV Set	200–550	Electric Drill ½ in.	750
Toaster	1000	Electric Drill ¼ in.	250
Skillet	1250		
Coffee Maker	1000		
Radio	40–100		
Refrigerator	1200		
Electric Stove	3000–10000		
Electric Water Heater	1000–5000		

Appliance and Equipment Motor Starting Requirements

Approximate starting watts required

Motor Rating (hp)	*Approx Running Watts*	*Universal Motors*	*Repulsion Induction Motors*	*Capacitor Motors*	*Split Phase Motors*
⅙	275	400	600	850	1200
¼	400	500	850	1050	1700
⅓	450	600	975	1350	1950
½	600	750	1300	1800	2600
¾	850	1000	1900	2600	*
1	1000	1250	2300	3000	*
1½	1600	*	3200	4200	*
2	2000	*	3900	5100	*
3	3000	*	5200	6800	*
5	4800	*	7500	9800	*

* Motors of higher horsepower than shown in this classification are not generally used.

Auxiliary Power Plant Capability for Electric Motor Starting

Type of Motor and HP Rating

Generator Rating In Watts	*Universal*	*Repulsion Heavy Start Load*	*Induction Light Start Load*	*Capacitor Heavy Start Load*	*Capacitor Light Start Load*	*Split Phase Heavy Start Load*	*Split Phase Light Start Load*
1000	½	—	—	—	—	—	—
1250	1	½	—	¼	—	¼	—
1750	1	½	¾	¼	½	⅓	—
2650	1½	1	1½	½	1	½	¾
3500	*	2	2½	1½	2	*	*
5000	*	2½	3	2	*	*	*
7500	*	4	5	2½	*	*	*
1500	1	½	½	¼	¼	¼	*
3000	2	1½	2	¾	1	¾	¾
5000	*	2½	3	2½	3	*	*

* Motors of higher horsepower rating than shown in this classification are not generally used.

6 · Automatic Transmission

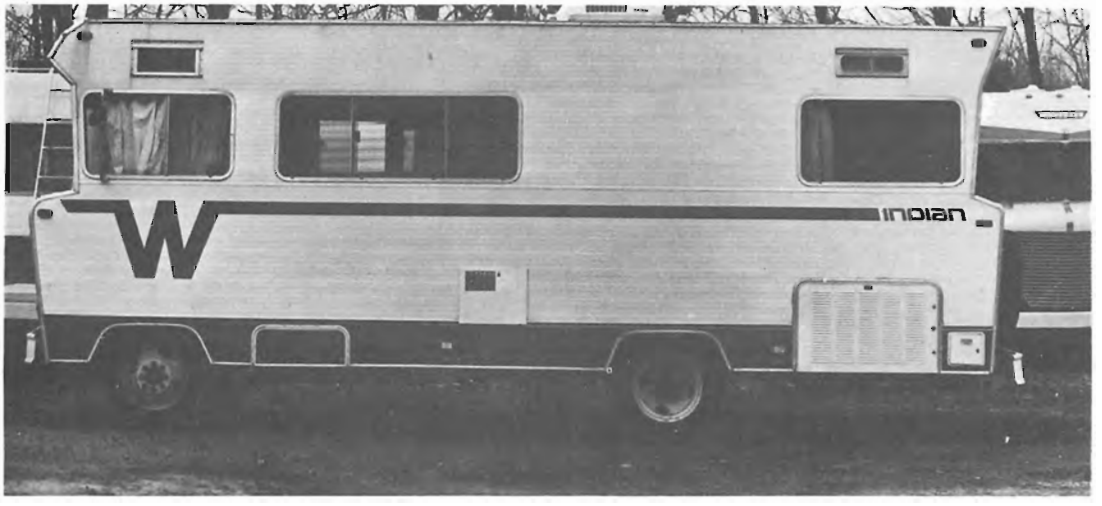

Pan Removal

Since the Loadflite automatic transmission doesn't have a drain plug, the fluid is drained by loosening the pan and allowing the fluid to run out over the top of the pan.

To avoid making a really big mess, place a drain pan under one corner of the transmission pan and remove the two attaching screws nearest to either side of that particular corner. One by one, and in a progressive manner, loosen all of the other attaching screws holding the transmission pan, leaving the ones farthest away from the "drain" corner tighter than the rest. When the majority of the fluid has drained, hold the pan up with one hand, remove the remaining attaching screws and carefully lower the pan. There will be some automatic transmission fluid left in the pan, so be careful not to spill any.

Clean the pan in a suitable solvent and wipe it dry with a clean, lint-free cloth. Remove all gasket material from the mating surfaces of the pan and the transmission case.

Install the pan in the reverse order of removal using a new pan-to-transmission gasket and torqueing the bolts in an alternating pattern to 150 in. lbs.

NOTE: *See Chapter 1 for installing transmission fluid.*

Filter Service

The filter is located directly under the oil pan.

There are filter replacement kits available for changing the transmission fluid filter. The kit includes a new filter, pan gasket and, in most cases, a new rubber O-ring to seal the intake pipe. If a new O-ring is not provided, leave the old one in place. If you can see that the old O-ring is cracked or damaged in any way, it is necessary to replace it with a new one, which can be obtained at a Dodge dealer.

1. Remove the bottom pan and gasket.
2. Remove the oil filter retainer bolts and remove the oil filter assembly from the transmission.
3. Remove the intake pipe from the filter and the intake pipe-to-case O-ring, if it is to be replaced.
4. Coat the new rubber O-ring with transmission fluid and position it in the groove at the inlet opening.
5. Slide the inlet pipe onto the new filter and position the filter on the transmission, guiding the inlet pipe in place.
6. Install the filter retaining bolt and tighten securely.
7. Install the transmission oil pan.

Kick-down Band Adjustment

The kick-down band adjusting screw is located on the left-side of the transmission case.

1. Loosen the locknut and back off about 5 turns. Check the adjusting screw for free turning in the transmission case.
2. Tighten the adjusting screw to 72 in. lbs.
3. Back off the adjusting screw 2 turns if the vehicle is equipped with a 413 or 440 V8; 2½ turns if equipped with a 318 V8.
4. Hold the adjustment screw in this position and tighten the locknut to 35 ft lbs.

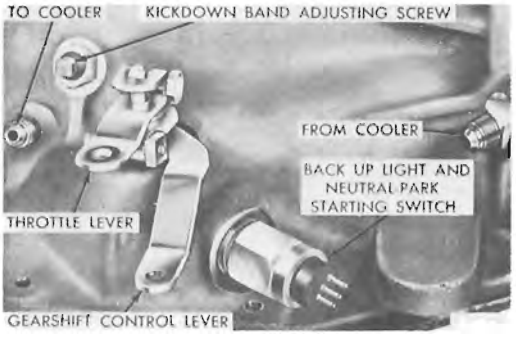

Location of the kick-down band adjusting screw

Low and Reverse Band Adjustment

1. Drain the transmission fluid from the loosened oil pan and remove the oil pan.
2. Loosen the low-reverse band adjusting screw locknut and back off the nut approximately 5 turns. Check the screw for free turning in the lever.
3. Tighten the adjustment screw to 72 in. lbs.
4. Back off the adjusting screw 2 turns (all engines).
5. Hold the adjusting screw in this position and tighten the locknut to 30 ft lbs.
6. Reinstall the oil pan, using a new gasket. Fill the transmission with transmission fluid.

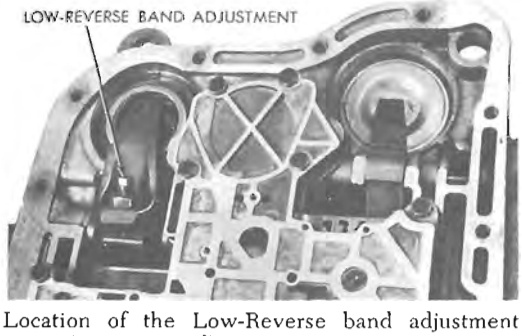

Location of the Low-Reverse band adjustment screw (pan removed)

Gearshift Linkage Adjustment

1. Disconnect the control cable from the gearshift control lever on the transmission.
2. Move the selector lever to the Park position to see that the detent assembly is aligned with the Park "notch" in the detent plate. Loosen the two retaining nuts and align the detent assembly as required.
3. Move the gearshift control lever on the transmission all the way to the rear (in the Park detent).
4. With the control lever in the Park position detent and the selector lever in the Park position, adjust the cable length with the clevis and connect the cable to the control lever. When the cable length is correct, the clevis pin can be installed without any forward or rearward movement of the control lever. Check the adjustment by testing the starter operation in the Park and Neutral positions. The engine should start when the control lever is in these positions.

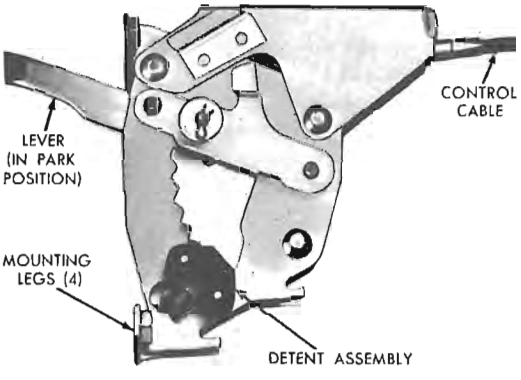

The gearshift control dash unit

Transmission Throttle Rod Adjustment

Three-Section Throttle Rod

1. Disconnect the choke at the carburetor or block the choke valve in the full open position. Open the throttle slightly to release the fast idle cam, then return the carburetor to curb idle.
2. Have an assistant hold the transmission throttle lever forward against its stop. It is important that the transmission lever be held firmly against the stop while the adjustment is made.
3. With a 3/16 in. diameter rod placed in the holes provided in the upper bellcrank and lever, adjust the length of the inter-

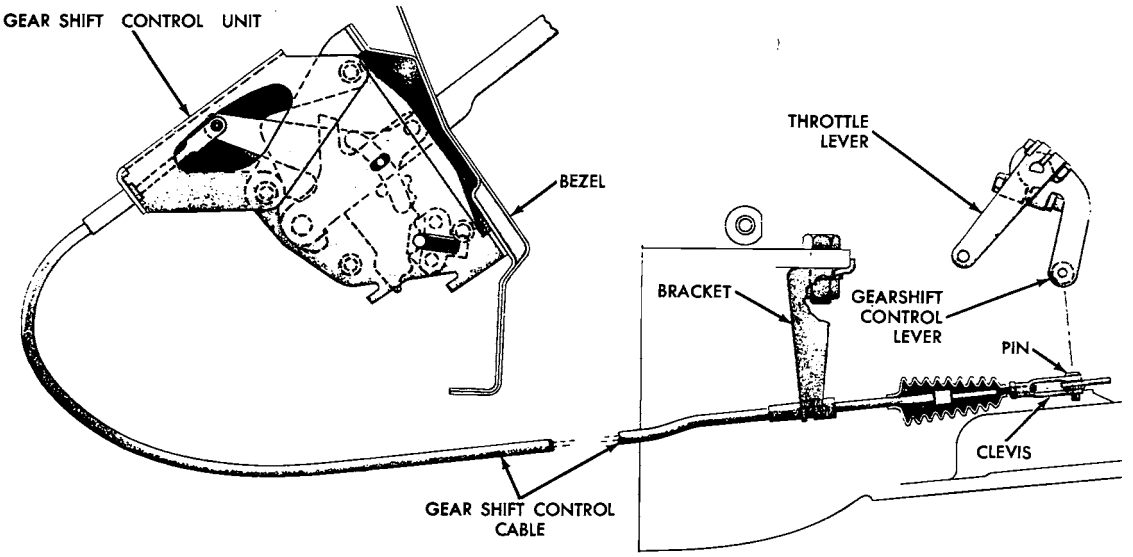

The gearshift control cable assembly and related components

mediate transmission rod by means of the threaded ball socket at the upper end of the rod. The ball socket must line up with the ball end with a slight downward effort on the rod.

4. Assemble the ball socket to the ball end and remove the 3/16 in. rod from the upper bellcrank and lever.

5. Disconnect the return spring, clip and washer, then adjust the length of the carburetor rod by pushing rearward on the rod with a slight effort (to remove all backlash) and turning the threaded adjustment. The rear end of the slot should contact the carburetor lever pin (no backlash) without exerting any forward force on the pin when the slotted adjuster link is in its normal operating position.

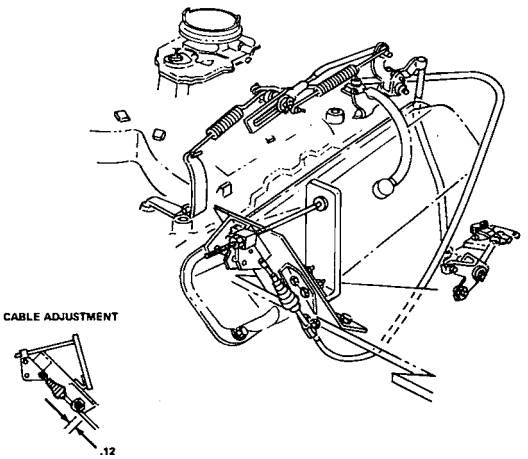

The three-section transmission throttle rod assembly

6. Assemble the slotted adjuster link to the carburetor lever pin and install the washer and retainer clip. Assemble the transmission linkage return spring in place.

7. The throttle lever on the transmission can now be released. Check the freedom of operation by moving the slotted link at the carburetor to the full rearward position, then allow it to return slowly, making sure that it returns to the full forward position.

8. Connect the choke or remove the blocking device. Check the adjustment by making sure that the transmission throttle rod begins to move simultaneously with the carburetor.

Single-Section Throttle Rod

1. Disconnect the choke at the carburetor or block the choke valve in the full open position. Open the throttle slightly to release the fast idle cam, then return the carburetor to curb idle.

2. Loosen the transmission throttle rod adjustment lockscrew.

3. Have an assistant hold the transmission throttle lever forward against its stop. It is important that the transmission lever remain firmly against the stop during the adjustment procedure.

4. Adjust the transmission rod at the carburetor by pushing forward on the retainer and rearward on the rod (opposite directions) with a slight force to remove

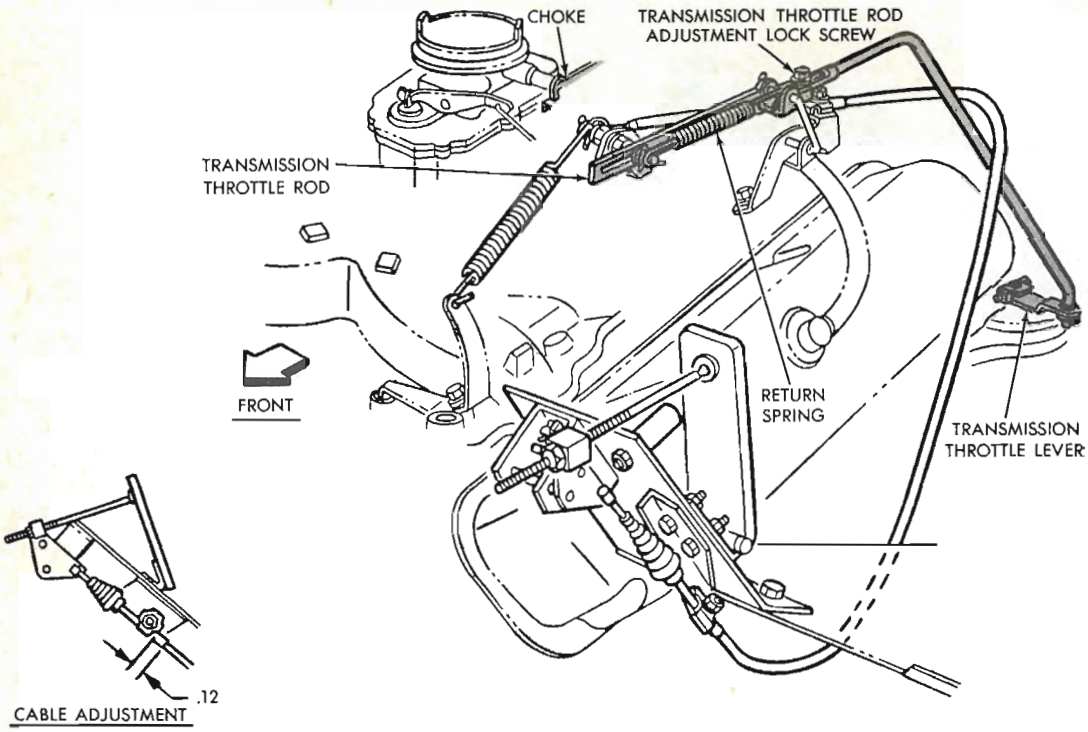

The single-section transmission throttle rod assembly

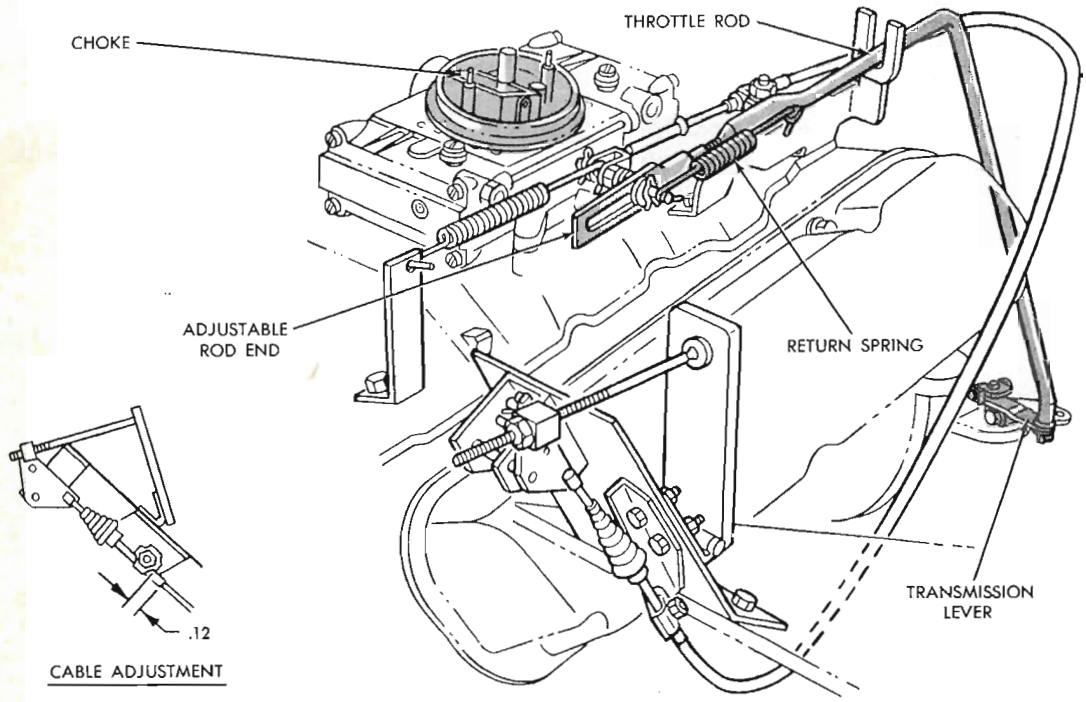

The single-section transmission throttle rod assembly on the 413 V8

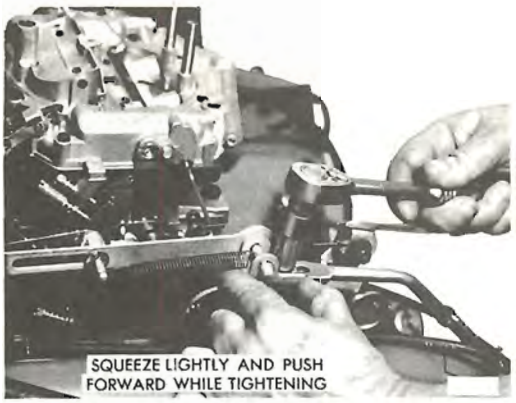

Tightening the adjuster nut on the single-section transmission throttle rod

all backlash. Tighten the transmission rod locking screw to 100 in. lbs.

NOTE: *The rear edge of the link slot must be against the carburetor lever pin during this adjustment.*

NOTE: *On the 413 V8, the rod is adjusted by turning the threaded adjustment on the rod end nearest the carburetor.*

5. The transmission throttle lever may now be released. Check the linkage for freedom of movement by moving the slotted link at the carburetor to the full rearward position, then allow it to return slowly, making sure that it returns to the full forward position.

6. Connect the choke or remove the blocking device.

7. Visually check the adjustment by noting that the transmission throttle rod begins to move simultaneously with the carburetor.

7 · Drive Train

Driveline

DRIVESHAFT AND U-JOINTS

The Winnebago chassis driveline system consists of tubular steel driveshafts with cross and roller type universal joints. Short wheelbase models use a one-piece driveshaft with a sliding spline at the transmission end to compensate for rear axle movement. Longer wheelbase models use a two-piece driveshaft with a sliding spline at the center support bearing to compensate for rear axle movement.

When excessive play develops between the cross and roller bearings, all parts involved should be replaced by installing a universal joint cross package.

NOTE: *Do not allow the driveshaft to drop or hang loose from any of the joints during removal. Wire it up or otherwise support the loose end of the shaft to prevent damage to the joint.*

Before removing the driveshaft with a sliding yoke from the transmission, the vehicle front end should be lowered slightly to prevent the loss of transmission fluid.

Removal and Installation

ONE-PIECE DRIVESHAFT

1. Remove the attaching bolts, washers, and clamps from the drive pinion hub yoke at the rear axle.
2. Slide the front yoke of the driveshaft from the transmission output shaft. Remove the driveshaft from the vehicle.
3. Install the driveshaft in the reverse order of removal, being careful not to burr the splines in the yoke and on the transmission output shaft.

NOTE: *On the 413 V8, the sliding spline yoke and the front of the driveshaft have alignment arrows that must be aligned when installed.*

TWO-PIECE DRIVESHAFT

1. Mark the driveshaft and pinion hub yoke at the rear axle so that the driveshaft can be reinstalled in the same position. Also mark the center bearing spline and slip yoke for the same reason.

NOTE: *The driveshaft must be reinstalled in the same position from which it is removed. All of the U-joints must be aligned on the same horizontal plane.*

2. Remove the attaching bolts,

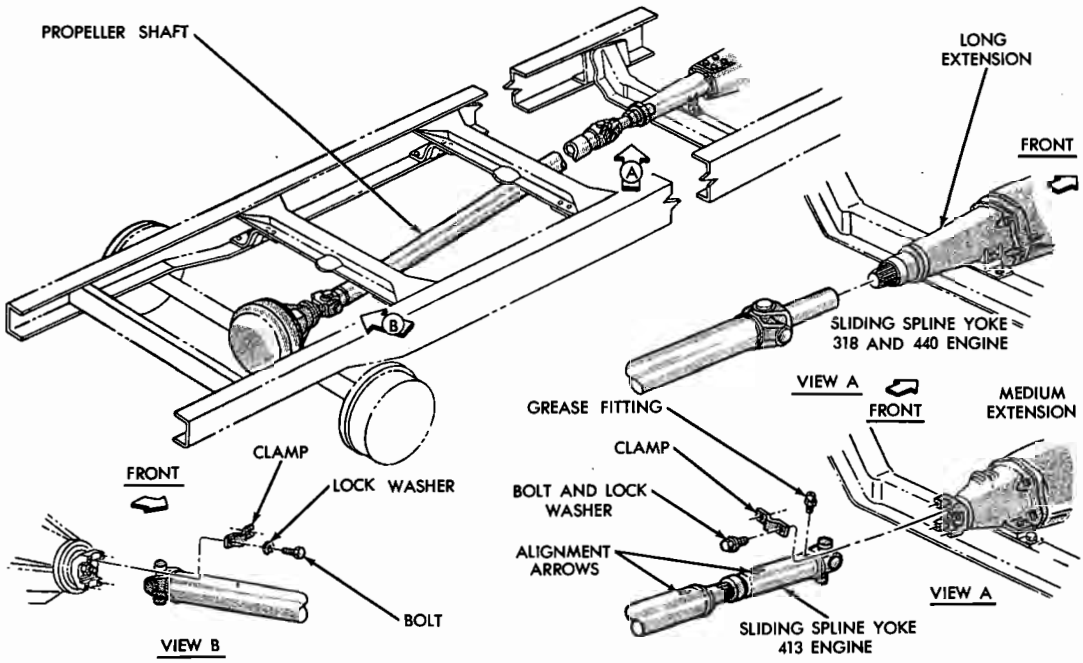

One-piece driveshaft installation

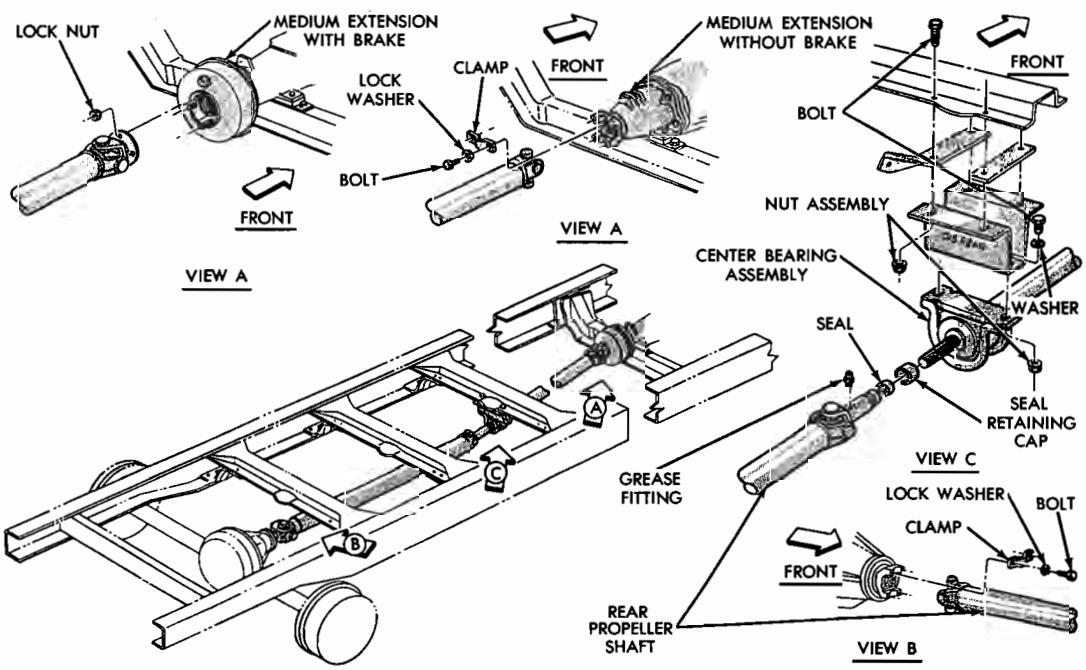

Two-piece driveshaft installation

washers, and clamps from the drive pinion hub yoke at the rear axle. Slide the rear shaft off the splines of the front shaft at the center bearing and remove the shaft from the vehicle.

3. Remove the retaining bolts and clamps or flange nuts, if the vehicle is equipped with a transmission brake, from the transmission end of the front driveshaft.

NOTE: *The universal joint at this end must also be reinstalled in the same position from which it is removed. Mark the parts to facilitate reinstallation.*

4. Remove the two center bearing mounting nuts and bolts and remove the shaft with the center bearing from the vehicle.

5. Install the two-piece driveshaft in the reverse order of removal. Tighten the two center bearing mounting nuts and bolts until they are just snug.

6. Jack up the rear wheels and drive the driveshafts with the engine. This will allow the center bearing to seek its own alignment. After this is done, tighten the center bearing support mounting bolts.

CAUTION: *A great amount of caution must be exercised when running the engine with the transmission in gear while the vehicle is jacked up. Make sure that the vehicle is firmly supported, the front wheels chocked and do not race the engine.*

U-Joint Overhaul

1. Remove the driveshaft with the U-joint that is to be replaced from the vehicle.

2. Hammer the bushings slightly inward to relieve pressure from the snap-rings and remove the snap-rings.

3. Position the yoke in a vise with a socket large enough to receive the bushing on one side and a socket slightly smaller than the bushing on the other side.

4. As pressure is applied, one bushing will move into the yoke and the opposite bushing will move into the receiving socket.

5. After one roller is out, press on the cross end to move the opposite bushing into the receiving socket. Discard the cross and rollers. Apply the same procedure as given above to remove the other half of the cross if it is mounted in a sliding yoke.

6. Position the yoke in a vise with the new bushing assemblies and new cross assembly.

7. As pressure is applied, guide the cross ends into the bushing and roller assemblies.

8. Press the bushings just far enough in to expose the snap-ring grooves and install new snap-rings.

9. If a second yoke is not used, install the bushings with the snap-rings on the cross ends and hold them in place with tape until the driveshaft is installed.

10. Install the driveshaft.

Center Bearing Overhaul

1. Mark the parts for reassembly and remove the driveshafts.

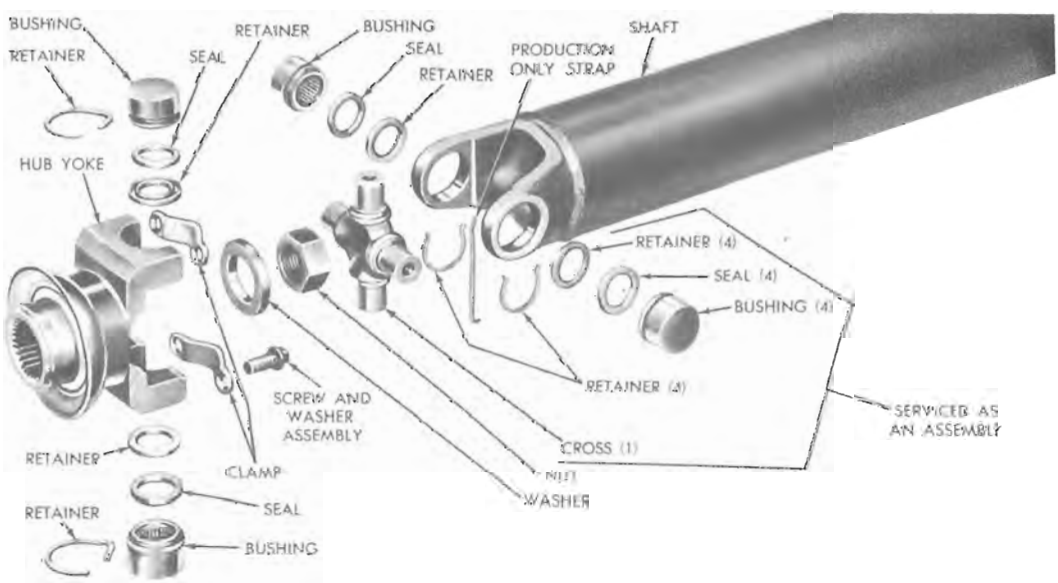

An exploded view of a U-joint installation with a hub yoke

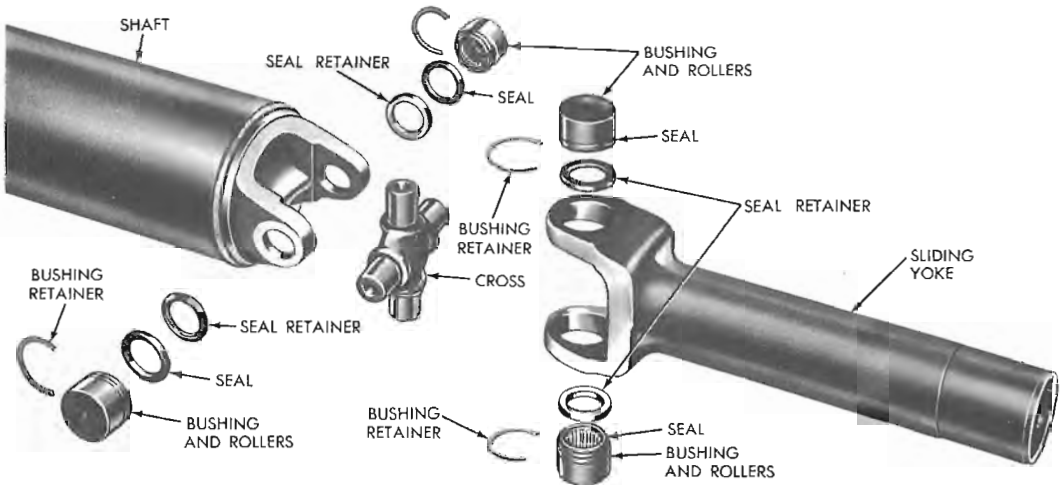

An exploded view of a U-joint installation with a sliding yoke

2. Place the front shaft in a vise and pull the bearing support and insulator from the bearing. Discard these parts.

3. Bend the slinger away from the bearing with a hammer to obtain clearance to install a bearing puller.

4. Remove the bearing with a puller and remove the slinger. Discard all of these parts. The center bearing replacement package includes a complete bearing assembly plus the slinger and retainer.

5. Place the new slinger, bearing assembly, and retainer on the shaft. Each of these parts is a press fit on the splined shaft.

6. Using a strong tube or pipe which clears the splines, press or drive the parts forward on the shaft until they bottom on the shoulder.

7. If the seal on the rear shaft slip yoke requires replacement, pry the cap from the yoke and discard the seal and cap.

8. Place a new seal cap and felt seal on the center bearing splines, to be finally assembled to the yoke after the driveshafts are installed.

9. Install the front and rear driveshafts. Slide the seal and cap to the yoke and crimp the cap tabs to the yoke.

Rear Axle

The rear axle must transmit power through 90°. To accomplish this, straight cut bevel gears or spiral bevel gears are used. This type of gear is satisfactory for

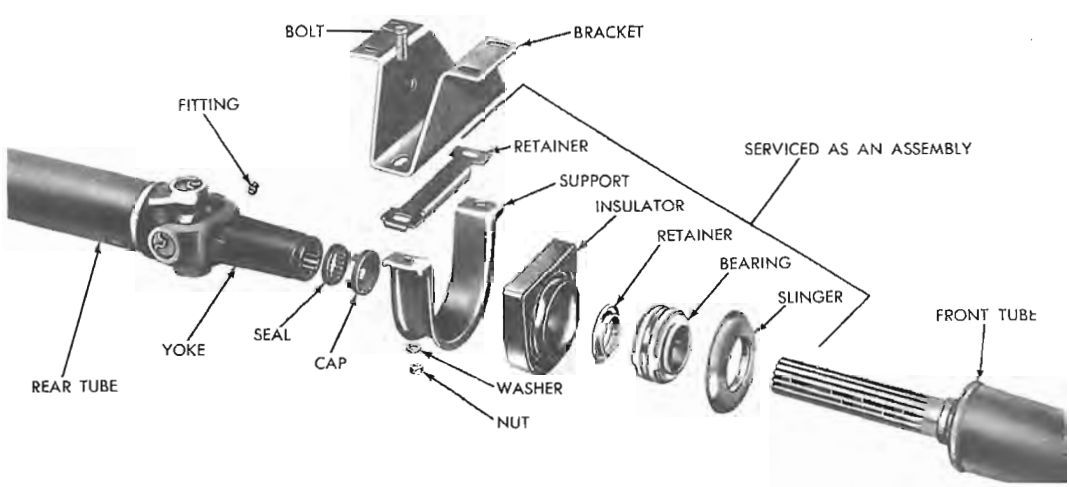

An exploded view of the center bearing assembly

differential side gears, but since the centerline of the gears must intersect, they rapidly became unsuited for ring and pinion gears. The lowering of the driveshaft brought about a variation of the bevel gear, which is called the hypoid gear. This type of gear does not require a meeting of the gear centerlines and can therefore be underslung, relative to the centerline of the ring gear.

GEAR RATIOS

The drive axle of a vehicle is said to have a certain axle ratio. This number (usually a whole number and a decimal fraction) is actually a comparison of the number of gear teeth on the ring gear and the pinion gear. For example, a 4.11 rear means that theoretically, there are 4.11 teeth on the ring gear for every one tooth on the pinion. Actually, on a 4.11 rear, there are 37 teeth on the ring gear and nine teeth on the pinion gear. By dividing the number of teeth on the pinion gear into the number of teeth on the ring gear, the numerical axle ration (4.11) is obtained. This also provides a good method of ascertaining exactly which axle ratio one is dealing with.

All Dodge motor home chassis are equipped with Spicer 60HD, 70 or 70HD rear axles. Possible gear ratios are as follows: 4.10:1 and 4.88:1 on the 60HD, 4.56:1 and 4.88:1 on the 70, and 4.56:1 on the 70HD.

DIFFERENTIAL OPERATION

The differential is an arrangement of gears that permits the rear wheels to turn at different speeds when cornering and divides the torque between the axle shafts. The differential gears are mounted on a pinion shaft and the gears are free to rotate on this shaft. The pinion shaft is fitted in a bore in the differential case and is at right angles to the axle shafts.

Power flow through the differential is as follows. The drive pinion, which is turned by the driveshaft, turns the ring gear. The ring gear, which is bolted to the differential case, rotates the case. The differential pinion forces the pinion gears against the side gears. In cases where both wheels have equal traction, the pinion gears do not rotate on the pinion shaft, because the input force of the pinion gear is divided equally between the two side gears. Consequently the pinion gears revolve with the pinion shaft, although they do not revolve on the pinion shaft itself. The side gears, which are splined to the axle shafts, and meshed

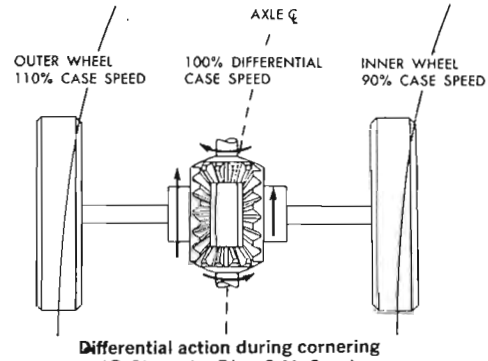

Differential action during cornering
(© Chevrolet Div., G.M. Corp)

Differential action during cornering

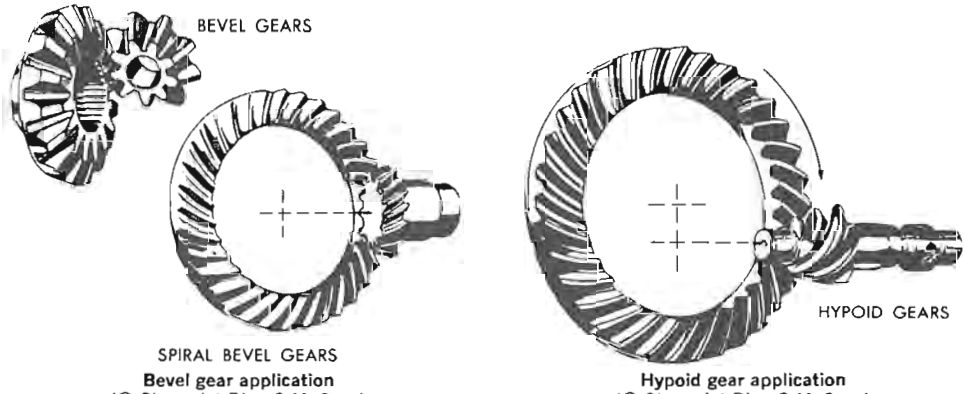

Bevel gear application
(© Chevrolet Div., G.M. Corp)

Hypoid gear application
(© Chevrolet Div., G.M. Corp)

Three different types of gears used for ring and pinion gears

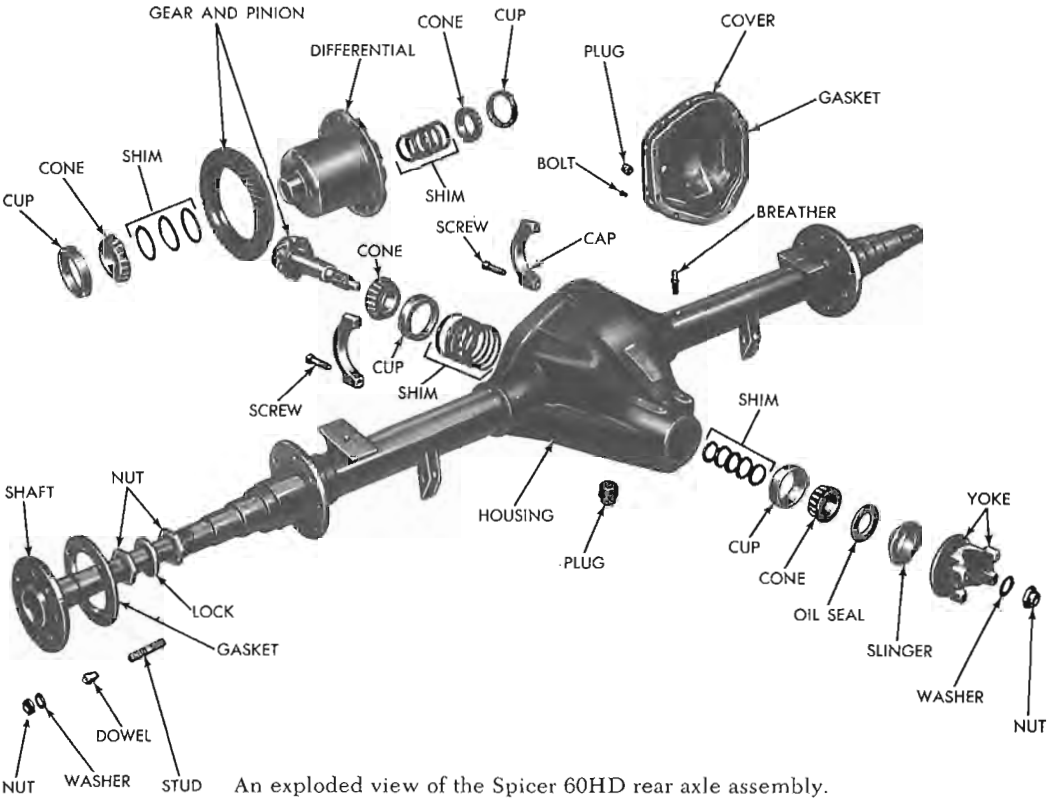

An exploded view of the Spicer 60HD rear axle assembly.

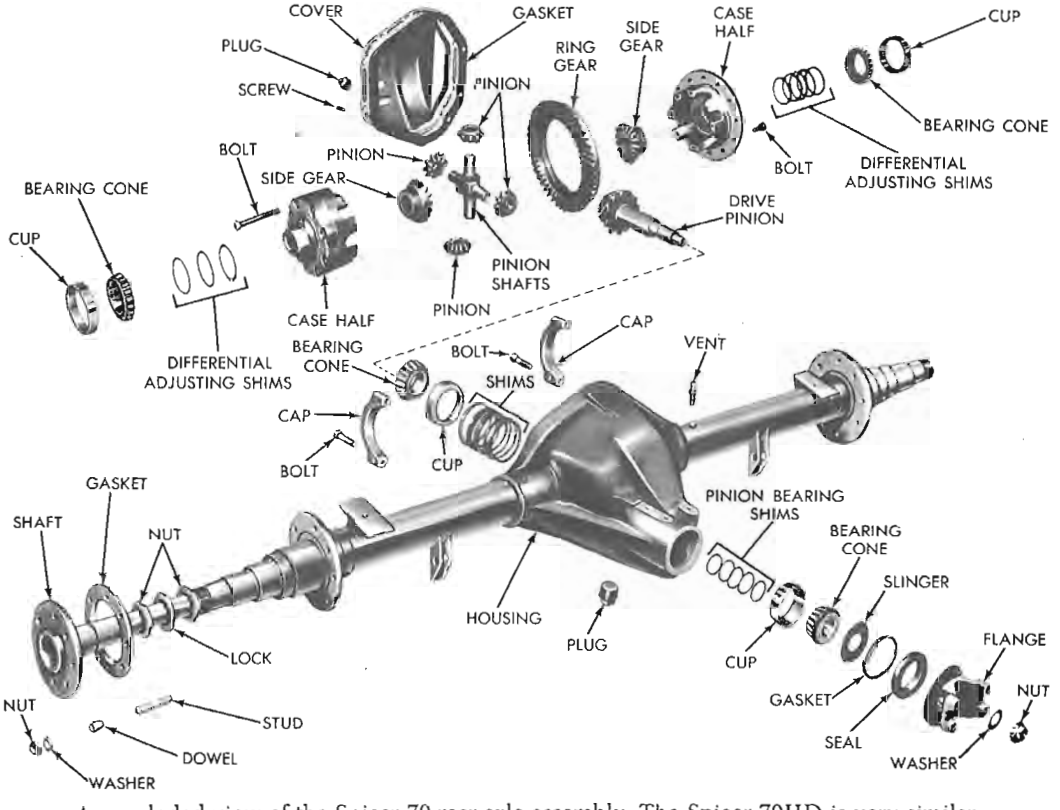

An exploded view of the Spicer 70 rear axle assembly. The Spicer 70HD is very similar

with the pinion gears, rotate the axle shafts.

When it becomes necessary to turn a corner, the differential becomes effective and allows the axle shafts to rotate at different speeds. As the inner wheel slows down, the side gear splined to the inner wheel axle shaft also slows down. The pinion gears act as balancing levers by maintaining equal tooth loads to both gears while allowing unequal speeds of rotation at the axle shafts. If the vehicle speed remains constant, and the inner wheel slows down to 90 percent of vehicle speed, the outer wheel will speed up to 110 percent.

General Drive Axle Diagnostic Guide

(Also see following text for further differential diagnosis.)

Condition	*Possible Cause*	*Correction*
Rear wheel noise	(a) Loose wheel.	(a) Tighten loose wheel nuts.
	(b) Spalled wheel bearing cup or cone.	(b) Check rear wheel bearings. If spalled or worn, replace.
	(c) Defective or brinelled wheel bearing.	(c) Defective or brinelled bearings must be replaced. Check rear axle shaft end-play.
	(d) Excessive axle shaft end-play.	(d) Readjust axle shaft end-play.
	(e) Bent or sprung axle shaft flange.	(e) Replace bent or sprung axle shaft.
Scoring of differential gears and pinions	(a) Insufficient lubrication.	(a) Replace scored gears. Scoring marks on the pressure face of gear teeth or in the bore are caused by instantaneous fusing of the mating surfaces. Scored gears should be replaced. Fill rear axle to required capacity with proper lubricant.
	(b) Improper grade of lubricant.	(b) Replace scored gears. Inspect all gears and bearings for possible damage. Clean and refill axle to required capacity with proper lubricant.
	(c) Excessive spinning of one wheel.	(c) Replace scored gears. Inspect all gears, pinion bores and shaft for scoring, or bearings for possible damage.
Tooth breakage (ring gear and pinion)	(a) Overloading.	(a) Replace gears. Examine other gears and bearings for possible damage. Avoid future overloading.
	(b) Erratic clutch operation.	(b) Replace gears, and examine remaining parts for possible damage. Avoid erratic clutch operation.
	(c) Ice-spotted pavements.	(c) Replace gears. Examine remaining parts for possible damage. Replace parts as required.

General Drive Axle Diagnostic Guide (cont.)

(Also see following text for further differential diagnosis.)

Condition	*Possible Cause*	*Correction*
Tooth breakage (ring gear and pinion)	(d) Improper adjustment.	(d) Replace gears. Examine other parts for possible damage. Be sure ring gear and pinion backlash is correct.
Rear axle noise	(a) Insufficient lubricant.	(a) Refill rear axle with correct amount of the proper lubricant. Also check for leaks and correct as necessary.
	(b) Improper ring gear and pinion adjustment.	(b) Check ring gear and pinion tooth contact.
	(c) Unmatched ring gear and pinion.	(c) Remove unmatched ring gear and pinion. Replace with a new matched gear and pinion set.
	(d) Worn teeth on ring gear or pinion.	(d) Check teeth on ring gear and pinion for contact. If necessary, replace with new matched set.
	(e) End-play in drive pinion bearings.	(e) Adjust drive pinion bearing preload.
	(f) Side play in differential bearings.	(f) Adjust differential bearing preload.
	(g) Incorrect drive gear lash.	(g) Correct drive gear lash.
	(h) Limited-slip differential—moan and chatter.	(h) Drain and flush lubricant. Refill with proper lubricant.
Loss of lubricant	(a) Lubricant level too high.	(a) Drain excess lubricant.
	(b) Worn axle shaft oil seals.	(b) Replace worn oil seals with new ones. Prepare new seals before replacement.
	(c) Cracked rear axle housing.	(c) Repair or replace housing as required.
	(d) Worn drive pinion oil seal.	(d) Replace worn drive pinion oil seal with a new one.
	(e) Scored and worn companion flange.	(e) Replace worn or scored companion flange and oil seal.
	(f) Clogged vent.	(f) Remove obstructions.
	(g) Loose carrier housing bolts or housing cover screws.	(g) Tighten bolts or cover screws to specifications and fill to correct level with proper lubricant.
Overheating of unit	(a) Lubricant level too low.	(a) Refill rear axle.
	(b) Incorrect grade of lubricant.	(b) Drain, flush and refill rear axle with correct amount of the proper lubricant.
	(c) Bearings adjusted too tightly.	(c) Readjust bearings.
	(d) Excessive wear in gears.	(d) Check gears for excessive wear or scoring. Replace as necessary.
	(e) Insufficient ring gear-to-pinion clearance.	(e) Readjust ring gear and pinion backlash and check gears for possible scoring.

DIFFERENTIAL DIAGNOSIS

The most essential part of rear axle service is proper diagnosis of the problem. Bent or broken axle shafts or broken gears pose little problem, but isolating an axle noise and correctly interpreting the problem can be extremely difficult, even for an experienced mechanic.

Any gear driven unit will produce a certain amount of noise, therefore, a specific diagnosis for each individual unit is the best practice. Acceptable or normal noise can be classified as a slight noise heard only at certain speeds or under unusual conditions. This noise tends to reach a peak at 40–60 mph, depending on the road condition, load, gear ratio and tire size. Frequently, other noises are mistakenly diagnosed as coming from the rear axle. Vehicle noises from tires, transmission, driveshaft, U-joints and front and rear wheel bearings will often be mistaken as emanating from the rear axle. Raising the tire pressure to eliminate tire noise (although this will not silence mud or snow treads), listening for noise at varying speeds and road conditions and listening for noise at drive and coast conditions will aid in diagnosing alleged rear axle noises.

External Noise Elimination

It is advsiable to make a thorough road test to determine whether the noise originates in the rear axle or whether it originates from the tires, engine transmission, wheel bearings or road surface. Noise originating from other places cannot be corrected by overhauling the rear axle.

Road Noise

Brick roads or rough surfaced concrete, may cause a noise which can be mistaken as coming from the rear axle. Driving on a different type of road, (smooth asphalt or dirt) will determine whether the road is the cause of the noise. Road noise is usually the same on drive or coast conditions.

Tire Noise

Tire noise can be mistaken as rear axle noises, even though the tires on the front are at fault. Snow tread and mud tread tires or tires worn unevenly will frequently cause vibrations which seem to originate elswhere; *temporarily, and for test purposes only,* inflate the tires to 15 psi over maximum inflation pressure. This will significantly alter the noise produced by the tires, but will not alter noise from the rear axle. Noises from the rear axle will normally cease at speeds below 30 mph on coast, while tire noise will continue at lower tone as car speed is decreased. The rear axle noise will usually change from drive conditions to coast conditions, while tire noise will not. Do not forget to lower the tire pressure to normal after the test is complete.

Engine and Transmission Noise

Engine and transmission noises also seem to originate in the rear axle. Road test the vehicle and determine at which speeds the noise is most pronounced. Stop the car in a quiet place to avoid interfering noises. With the transmission in Neutral, run the engine slowly through the engine speeds corresponding to the car speed at which the noise was most noticeable. If a similar noise was produced with a car standing still, the noise is not in the rear axle, but somewhere in the engine or transmission.

Front Wheel Bearing Noise

Front wheel bearing noises, sometimes confused with rear axle noises, will not change when comparing drive and coast conditions. While holding the car speed steady, lightly apply the footbrake. This will often cause wheel bearing noise to lessen as some of the weight is taken off the bearing. Front wheel bearings are easily checked by jacking up the wheels and spinning the wheels. Shaking the wheels will also determine if the wheel bearings are excessively loose.

Rear Axle Noises

If a logical test of the vehicle shows that the noise is not caused by external items, it can be assumed that the noise originates from the rear axle. The rear axle should be tested on a smooth level road to avoid road noise. It is not advisable to test the axle by jacking up the rear wheels and running the driveline.

True rear axle noises generally fall into two classes; gear noise and bearing noises, and can be caused by a faulty driveshaft, faulty wheel bearings, worn

differential or pinion shaft bearings, U-joint misalignment, worn differential side gears and pinions, or mismatched, improperly adjusted, or scored ring and pinion gears.

Rear Wheel Bearing Noise

A rough rear wheel bearing causes vibration or growl which will continue with the car coasting or in Neutral. A brinelled rear wheel bearing will also cause a knock or click approximately every two revolutions of the rear wheel, due to the fact that the bearing rollers do not travel at the same speed as the rear wheel and axle. Jack up the rear wheels and spin the wheel slowly, listening for signs of a rough or brinelled wheel bearing.

Differential Side Gear and Pinion Noise

Differential side gears and pinions seldom cause noise, since their movement is relatively slight on straight ahead driving. Noise produced by these gears will be more noticeable on turns.

Pinion Bearing Noise

Pinion bearing failures can be distinguished by their speed of rotation, which is higher than side bearings or axle bearings. Rough or brinelled pinion bearings cause a continuous low pitch whirring or scraping noise beginning at low speeds.

Side Bearing Noise

Side bearings produce a constant rough noise, which is slower than the pinion bearing noise. Side bearing noise may also fluctuate in the above rear wheel bearing test.

Gear Noise

Two basic types of gear noise exist. First, is the type produced by bent or broken gear teeth which have been forcibly damaged. The noise from this type of damage is audible over the entire speed range. Scoring or damage to the hypoid gear teeth generally results from insufficient lubricant, improper lubricant, improper breakin, insufficient gear back-

Noise Diagnosis Chart

Problem	*Cause*
1. Identical noise in Drive or Coast conditions	1. Road noise Tire noise Front wheel bearing noise
2. Noise changes on a different type of road	2. Road noise Tire noise
3. Noise tone lowers as car speed is lowered	3. Tire noise
4. Similar noise is produced with car standing and driving	4. Engine noise Transmission noise
5. Vibration	5. Rough rear wheel bearing Unbalanced or damaged driveshaft Unbalanced tire Worn universal joint in driveshaft Misaligned drive shaft at companion flange Excessive companion flange runout
6. A knock or click approximately every two revolutions of rear wheel	6. Brinelled rear wheel bearing
7. Noise most pronounced on turns	7. Differential side gear and pinion wear or damage
8. A continuous low pitch whirring or scraping noise starting at relatively low speed	8. Damaged or worn pinion bearing
9. Drive noise, coast noise or float noise	9. Damaged or worn ring and pinion gear
10. Clunk on acceleration or deceleration	10. Worn differential cross-shaft in case
11. Clunk on stops	11. Insufficient grease in driveshaft slip yoke
12. Groan in Forward or Reverse	12. Improper differential lubricant
13. Chatter on turns	13. Improper differential lubricant Worn clutch plates
14. Clunk or knock during operation on rough roads	14. Excessive end-play of axle shafts to differential cross-shaft

lash, improper ring and pinion gear alignment or loss of torque on the drive pinion nut. If not corrected, the scoring will lead to eventual erosion or fracture of the gear teeth. Hypoid gear tooth fracture can also be caused by extended overloading of the gear set (fatigue fracture) or by shock overloading (sudden failure). Differential and side gears rarely give trouble, but common causes of differential failure are shock loading, extended overloading and differential pinion seizure at the cross-shaft, resulting from excessive wheel spin and consequent lubricant breakdown.

The second type of gear noise pertains to the mesh pattern between the ring and pinion gears. This type of abnormal gear noise can be recognized as a cycling pitch or whine audible in either drive, float or coast conditions. Gear noises can be recognized as they tend to peak out in a narrow speed range and remain constant in pitch, whereas bearing noises tend to vary in pitch with vehicle speeds. Noises produced by the ring and pinion gears will generally follow the pattern below.

A. Drive Noise: Produced under vehicle acceleration.

B. Coast Noise: Produced while the car coasts with a closed throttle.

C. Float Noise: Occurs while maintaining constant car speed (just enough to keep speed constant) on a level road.

D. Drive, Coast and Float Noise: These noises will vary in tone with speed and be very rough or irregular if the differential or pinion shaft bearings are worn.

AXLE SHAFT

Removal and Installation

1. Remove the axle flange nuts and lockwashers. Rap the axle shafts sharply in the center of the flange with a hammer to free the locating dowels. Remove the tapered dowels and the axle shafts.

2. Clean the gasket contact area with a suitable solvent. Install a new gasket. Slide the axle shaft into the axle housing. Turn the axle shaft slightly to engage the splined end of the shaft with the differential. Install the tapered dowels, lockwashers, and nuts. Tighten the $^7/_{16}$ x 20 nuts to 40–70 ft lbs, and the $^1/_2$ x 20 nuts to 65–105 ft lbs.

8 · Suspension and Steering

Suspension

Leaf-type, fixed rate front and rear springs are used on all Dodge motor home chassis. The springs are mounted approximately parallel to the frame side members and are held in place on the axles by U-bolts.

The springs are of the semi-elliptical leaf-type. They are made up of a number of steel leaves of graduated length, each leaf being in total contact with the leaf above.

These springs are designed to operate normally without lubrication between

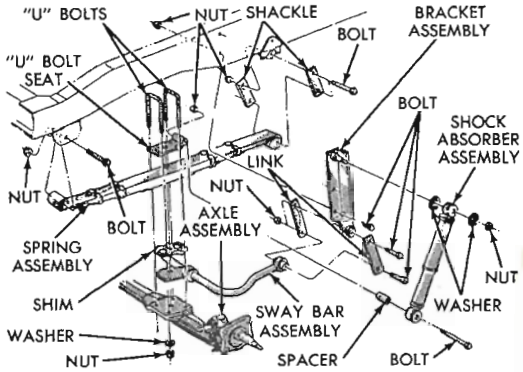

An exploded view of the front suspension on RM300, RM350, and RM400 chassis

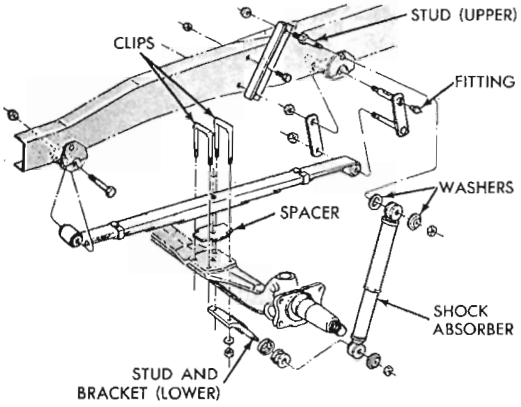

An exploded view of the front suspension on M300 and M375 chassis

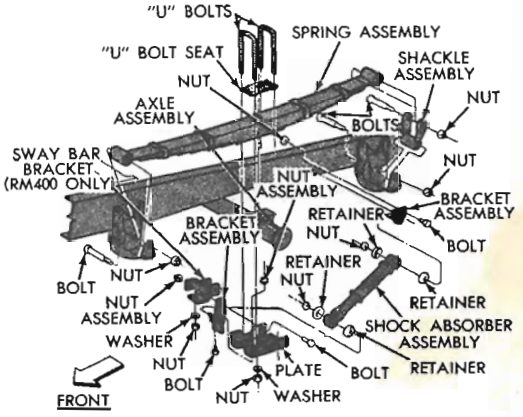

An exploded view of the rear suspension on RM300, RM350, and RM400 chassis

the leaves. However, in extreme cases the springs can be lubricated with a light rust inhibiting oil or a silicon type lubricant. Apply either type of lubricant sparingly.

Broken spring leafs may be replaced separately. The entire spring assembly should be replaced as a unit only if the spring assemblies have taken set (lost significant height).

SHOCK ABSORBERS

Removal and Installation

1. Remove the two bolts securing the shock absorber to the frame.
2. Remove the shock absorber lower bracket nut, rubber bushings and washers.
3. After removing the shock absorber and bracket assembly from the vehicle, remove the bracket from the shock absorber.
4. Install the upper brackets before installing the shock absorbers on the vehicle.
5. When installing the shock absorbers, be sure that the bushings are replaced in the shock absorber end rings and that the shock absorber is assembled on the stud with washers on either side of the bushings. Install the nut and tighten to 50 ft lbs.

NOTE: *The front axle steering knuckle pivot pin bushings are made of Delrin, which is a plastic material. The use of steam cleaning equipment will cause the bushings to distort and necessitate replacement of the bushings. Replacement bushings are made of bronze.*

FRONT END ALIGNMENT

Proper front end alignment is necessary to insure easier steering, longer tire wear and less strain on front end components.

When correcting front end alignment or after installing new front axle parts, check the alignment in the following order: Camber, Caster, and Toe-in (Toe-out on turns).

All wheel alignment measurements should be taken on a level surface, with the tires inflated to the recommended pressure, no passenger load, correct vehicle height (check for sagging springs), full tank of fuel, and with the full weight of the vehicle resting on the wheels.

Before having the front wheel alignment checked and adjusted, check the following:

1. Check the wheel and tire run-out (wobble) and eccentricity. Check the wheel bearing adjustment.
2. Check the brakes for dragging and the wheels for proper balance.

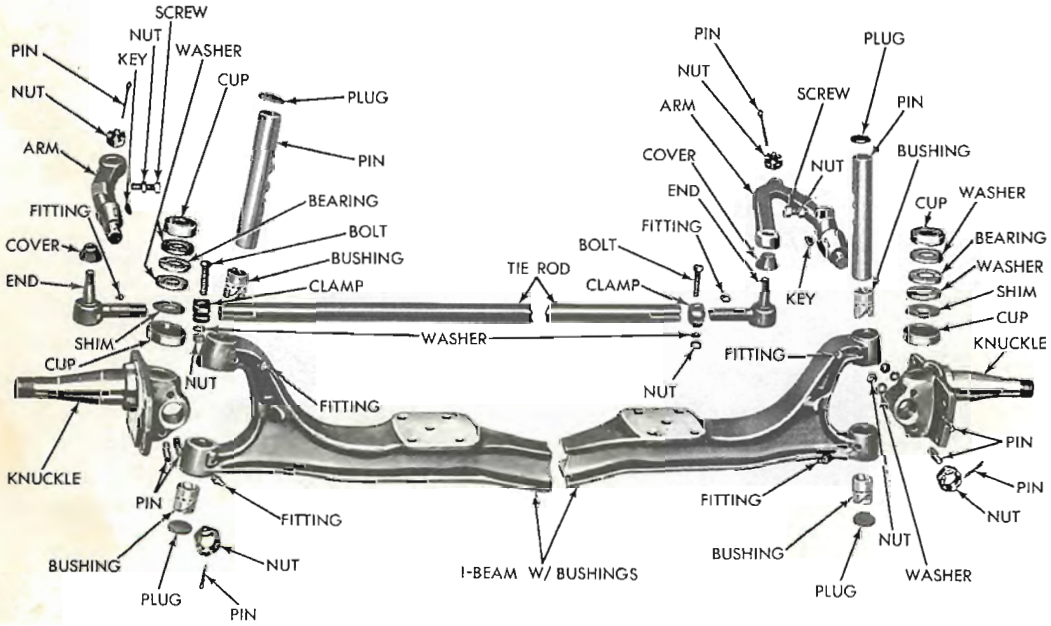

An exploded view of the front axle assembly—Elliott type

3. Check the front and rear springs for sag and check the attaching bolts for tightness.
4. Check the steering linkage for lost motion and proper adjustment.

Camber

Camber is the angle which the wheel inclines away from vertical at the top, viewed from the front of the vehicle. It is measured in degrees. Wheels with positive camber are farther apart at the top than at the bottom. Wheels with negative camber are farther apart at the bottom than at the top.

Incorrect camber causes the side of the tire tread to wear. Unequal camber between the right and left front wheels will cause the vehicle to lead to the right or left. It will lead toward the side with the greater positive camber.

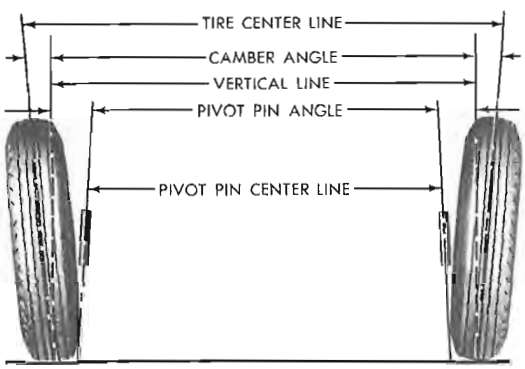

Camber angle and steering knuckle pivot pin inclination angle

Measurement of the camber angle requires special equipment and no adjustment can be made. The camber angle is designed into the front axle. If you should start to notice abnormal tire tread wear as mentioned above or the vehicle tries to steer to one side and not go straight on level roads, have the camber angle checked. If the camber is not within specifications, the axle or steering knuckle is bent and should be replaced.

Caster

Caster is the angle at which the pivot pin is inclined as viewed from the side of the vehicle. If the top of the pivot pin is tilted away from vertical toward the rear of the vehicle, caster is positive. Negative or reverse caster is tilting the top of the

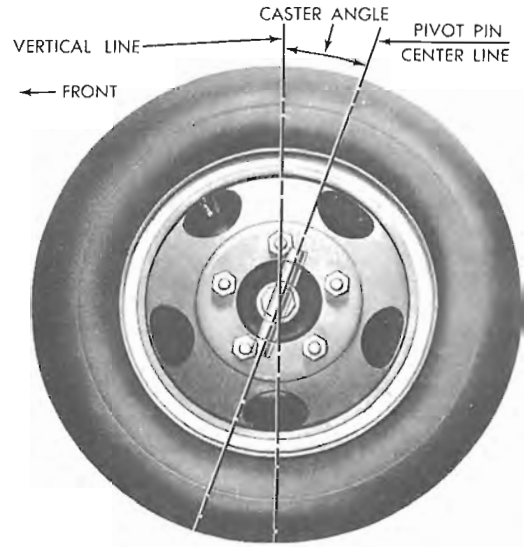

Caster angle (positive)

pivot pin away from vertical toward the front of the vehicle.

Positive caster causes a trailing action to be induced in the front wheels, while negative, or reverse, caster causes a leading action. The correct caster angle aids in keeping the front wheels in the straight-ahead position. When going around a curve, caster acts as an assisting force to help the driver return the front wheels to the straight-ahead position. If positive caster is not enough, steering return to a straight-ahead position is poor, while if there is too much positive caster steering effort is increased. Also, the vehicle will lead to the side with the most negative caster.

Measurement of the caster angle of the steering knuckle pivot pin requires the use of special equipment. If you notice any of the conditions described above that would indicate that the caster angle is not within specifications, have the angle checked. The caster angle is adjusted by inserting a wedge between the spring and the axle. To increase the caster angle, the wedge is inserted between the spring and axle with the thick end facing the rear of the vehicle. Caster is decreased by placing the wedge with the thick part toward the front of the vehicle.

Toe-In and Toe-Out

Toe-in is the distance, measured in fractions of an inch, in which the front

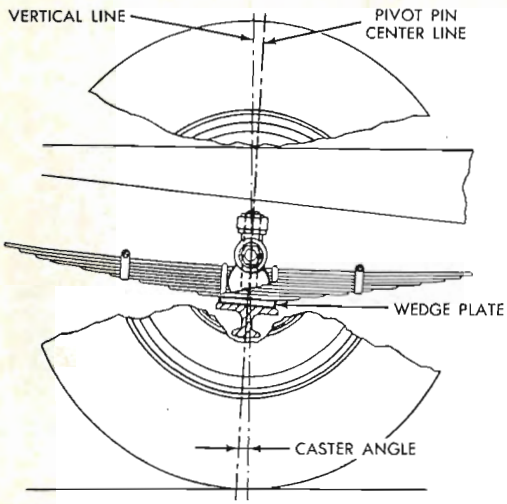

Placement of a wedge to adjust the caster angle

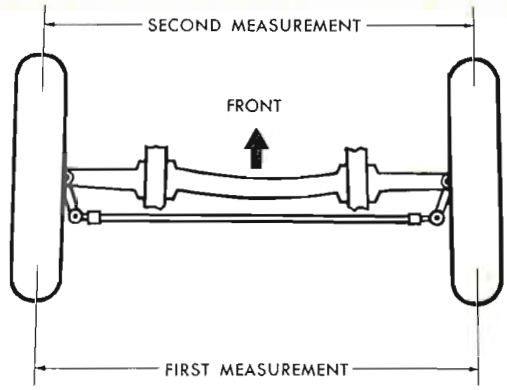

Measurement of toe-in

wheels are closer together at the front than at the rear of the tires, viewed from above the vehicle with the wheels in the straight-ahead position.

When the front wheels are turned to the right or left they actually toe-out, that is, the front edge of the tires are farther apart than the rear edge of the tires. The reason for this is that when negotiating a turn, both the front and rear wheels must travel in circular arcs having a common center to be in correct relative alignment. The inside wheel travels in an arc with a shorter radius than that of the arc travelled by the outer front wheel. Therefore the wheels will be farther apart at the front edge than at the back when turned from the straight-ahead position.

Excessive toe-in or toe-out will cause lateral slippage or scuffing between the tire and the road surface. This causes abnormal tire wear, the nature of which depends on the relationship between caster, camber and toe-in angles.

A bent steering knuckle will cause excessive tire wear, even though the toe-in setting may be correct for the straight-ahead position of the front wheels.

The toe-in/toe-out measurement can be taken without the aid of special equipment. However, the camber and, then, the caster must be correctly set before making any adjustments to the toe-in or toe-out.

The toe-in and toe-out are checked in the following manner:

1. Turn the .front wheels to the straight-ahead position.

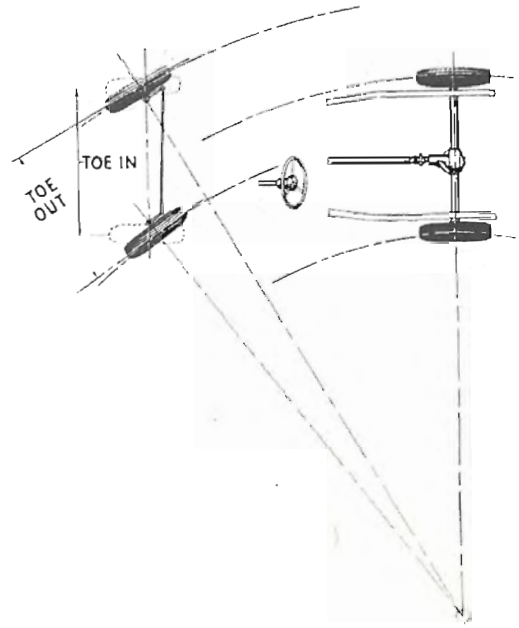

An illustration of toe-out in the steering geometry during turning

2. After the wheels have turned at least once while in the straight-ahead position, mark the center of the tire tread at a level even with the center of the hub and on the rear side of the tire. Measure the distance between the two marks.

3. Roll the vehicle ahead so that the two marks made on the rear of the tires are now in front and at center-of-the-hub level. Measure the distance between the same two points on the tires.

4. The difference between the measurements (front and rear) is the toe-in.

5. Toe-in is adjusted with the wheels in the straight-ahead position (with the steering gear in mid-position).

1, 1972, remove the turn signal lever by applying a wrench to the lever flats and unscrew the lever from the switch. On those models made after February 1, 1972, remove the retaining screw holding the turn signal lever to the column and remove the lever.

3. On models made prior to February 1, 1972, loosen the turn signal switch retaining screw 3 or 4 turns and lift the switch off the steering column. On the later models, remove the screws retaining the turn signal switch and upper bearing retainer. Remove the retainer and lift the switch upward.

4. Disconnect the turn signal switch leads. Tie a string or wire around the wiring harness and pull the harness up through the column with the string attached. Allow the string to remain in the column to aid in installing the wiring harness down through the column.

5. Install the turn signal switch in the reverse order of removal.

IGNITION SWITCH (STEERING COLUMN MOUNT)

Removal and Installation

1. Remove the steering wheel and turn signal switch.

2. Place the ignition switch cylinder in the Lock position and remove the key.

3. Insert a small screwdriver or a bent paper clip into the lock cylinder release hole and push in to release the spring-loaded lock retainer.

Pull the ignition switch cylinder out of the housing bore at the same time and remove the ignition switch assembly.

To install the ignition switch:

4. With the ignition key cylinder in the Lock position, and with the key removed, insert the key cylinder into the lock housing.

5. Press the cylinder into place until contact is made with the pin on the ignition switch cam.

6. Insert the key into the lock and rotate the lock until the slot in the cylinder plate lines up with the pin.

7. Press the key cylinder the remaining way into the lock housing, making sure that the retainer bar snaps into its slot in the lock housing.

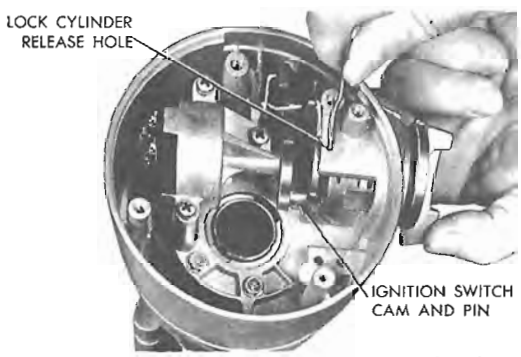

Removing the ignition switch lock cylinder from the steering column

POWER STEERING GEAR

Both the M300 and M375 Dodge motor home chassis are equipped with the Ross Model HF54 steeering gear and a slipper type power steering pump. Later M300 and M375 models use the Saginaw steering gear and a Saginaw power steering pump. All RM300, RM350 and RM400 models are equipped with the Saginaw power steering gear and use the Saginaw vane type pump.

Adjustments

All adjustments made on the steering gear are made with the gear removed from the vehicle and partially disassembled. Consequently, it is not recommended that the owner perform any adjustments. Have the steering gear serviced at a Dodge truck dealer.

POWER STEERING PUMP

Removal and Installation

If the power steering pump is being removed to facilitate the removal of another component, it is not necessary to remove the hoses from the pump. Simply loosen the pump mounting bolts and bracket, remove the drive belt, remove the pump bracket attaching screws holding the bracket and pump to the engine and ease the pump away. Lay the pump aside, being careful to support it, not allowing the weight of the pump to be supported by the power steering hoses.

If the pump is to be removed from the vehicle entirely, then the hoses will have to be removed at the pump. Place a container under the pump to catch the power steering fluid when the hoses are disconnected.

Install the power steering pump in reverse order of removal.

Wheel Alignment Specifications

Model	Caster① (deg) Manual Steering Load	Caster① (deg) Manual Steering No Load	Caster① (deg) Power Steering Load	Caster① (deg) Power Steering No Load	Camber (deg)	Toe-In (in.)②	Turning Angle (deg)	Pivot Pin Inclination (deg)
M300 and RM300	+3.0	+1.5	+6.0	+4.5	+2.0	0.600–0.180	32	7.0
M375, RM350, and RM400	+2.5	+1.0	+5.5	+4.0	+2.0	0.600–0.180	32	7.0

① Caster varies with front and rear spring loads (frame slope) and therefore should be checked with the vehicle loaded. No-load caster is approximately 5° to 6° for power steering. Caster should be increased if the vehicle wanders. Caster should be decreased if the steering effort is very high, especially when cornering.
② Measured at hub height.

6. Loosen the clamping bolts on both ends of the tie-rod.
7. Turn the tie-rod in the direction necessary to bring the toe-in within the specified limits.
8. Tighten the clamping bolts on the tie-rod ends.
9. Check the toe-in again to make sure that it remained the same when the clamp bolts were tightened.

Steering

STEERING WHEEL

After February 1, 1972, Dodge motor home chassis came equipped with a passenger car type steering wheel with a horn pad that extends completely across the steering wheel. The ignition switch is mounted in the side of the steering column instead of on the instrument panel as before the above date. The RM300 and RM400 chassis are equipped with a tilt steering column.

Removal and Installation

BEFORE FEBRUARY 1, 1972

1. Disconnect the negative battery cable.
2. Remove the horn button and switch assembly by pressing down firmly and rotating the horn button clockwise.
3. Disconnect the horn wire.
4. Lift out the retainer spring.
5. Scribe a locating mark on the steering wheel and steering shaft to facilitate reassembly.
6. Remove the steering wheel nut and remove the button retainer. Remove the steering wheel with a gear puller.
7. Install the steering wheel in the reverse order of removal.

AFTER FEBRUARY 1, 1972

1. Disconnect the negative battery cable.
2. Remove the horn pad assembly by removing the two retaining screws from behind the steering wheel.
3. Remove the steering wheel retaining nut and washer. Remove the steering wheel with a gear puller.

NOTE: *Removing the steering wheel by forcing or hammering will result in damage to the steering wheel. It is recommended a puller be used if possible.*

4. Install the steering wheel in the reverse order of removal.

TURN SIGNAL SWITCH

Removal and Installation

1. Remove the steering wheel.
2. On models made prior to February

9 · Brakes

A variety of types of brake assemblies and hydraulic system components in various combinations and methods of attachment are used on Dodge motor home chassis, including drum and disc brakes with dual and single wheel cylinder and caliper pistons; dual and single hydrovac booster units, conventional power brake vacuum booster units, rear drum brake parking brakes and transmission type parking brakes; and single and dual system master cylinders with pressure proportioning valves and system failure warning switches. All Dodge motor home chassis are equipped with a power-assisted hydraulic brake system.

The purpose of the master cylinder is to convert physical, mechanical force from the brake pedal into hydraulic pressure within the brake system and to apply it against the pistons in the wheel cylinders (drum brakes) or calipers (disc brakes). The pistons convert hydraulic pressure back into physical force at the drum brake shoes or disc brake pads.

With the master cylinder and the rest of the brake system filled with hydraulic brake fluid and bled free of air, a solid column of fluid is located on the pistons in the wheel cylinders or calipers. Upon application of the brakes at the brake pedal, fluid is displaced by the pistons in the master cylinder and is forced through the hydraulic lines into the wheel cylinders or calipers to activate the brakes. With release of brake application at the brake pedal, the fluid returns from the wheel cylinders or calipers through the brake lines and residual valves to the master cylinder bore.

The dual, safety-type master cylinder contains a double hydraulic cylinder with two fluid reservoirs, two hydraulic pistons (a primary and a secondary), and two residual check valves, located in the outlet ports. The master cylinder's primary and secondary pistons function simultaneously when both the primary and secondary systems are fully operative.

Failure in either the front or rear brake system does not result in failure of the entire hydraulic brake system. Should hydraulic failure occur in the rear system, the hydraulic pressure from the primary piston (which actuates the front brakes) causes the secondary piston to bottom out in its bore, due to the lack of hydraulic pressure. The primary piston then proceeds to actuate the front brakes with the continued stroke of the brake pedal. Fluid under pressure will continue to be displaced by the front brake (primary) system, allowing braking at the front wheels.

When one refers to brake system failure, the cause of the failure is generally a leak in the system. Leaks usually occur at the wheel cylinder or caliper. These two

components fail most of the time in either of two ways; they leak or they freeze up. Leaks are caused either by defective cups or seals or irregular surfaces of either wheel cylinder or caliper bore or the diameter of the cups or pistons. Frozen or seized wheel cylinders or calipers are caused by foreign material finding its way into the wheel cylinder or caliper and preventing the piston from sliding within the cylinder bore. In either case, the remedy is to either rebuild or replace the wheel cylinder or caliper.

Clean, high-quality brake fluid is essential to the safe and proper operation of the brake system. You should always buy the highest quality brake fluid that is available conforming to the Department of Transportation No. 3 specification (DOT 3). If the brake fluid becomes contaminated, drain and flush the system and fill the master cylinder with new fluid.

NOTE: *Never reuse any brake fluid. Any brake fluid that is removed from the system should be discarded.*

Since the hydraulic system is sealed, there must be a leak in the system, if the master cylinder is repeatedly low on fluid.

On its way to the wheels, the brake fluid passes through the pressure differential valve (on those vehicles so equipped). The pressure differential valve is an "H"-shaped valve, which is connected between the front and rear brake lines. Each of the brake lines is connected to one of the upright sides of the "H." The brake fluid passes through each of the upright sides inside the valve and leaves at the bottom of the sides where the outgoing brake lines pick up the fluid and carry it on to the wheels. A piston is mounted in the crossbar section of the "H." It is held centered in the valve by brake fluid in each of the upright sides of the "H." A brake warning light switch is screwed into the valve and contacts the piston. If a leak should develop in either the front or rear brake system, fluid pressure in the portion of the pressure differential valve, which corresponds to that system, would drop. This would cause the piston in the crossbar of the valve to move toward that section of the valve, since the normal fluid pressure in the other side of the valve would be dominant. The brake warning light switch would sense this movement and cause the brake warning lamp to light on the instrument panel. When the failure is repaired and the system bled of air, the piston should recenter itself when the brake pedal is firmly depressed. The brake light in the instrument panel should then go out.

Vehicles equipped with disc brakes have a combination pressure differential valve and a pressure metering valve. The purpose of the metering valve is to hold off hydraulic pressure to the front disc brakes in the 35 to 135 psi range to allow the rear drum brake shoes to overcome the return springs and begin to contact the drums. This feature helps prevent locking the front brakes on slippery surfaces under light braking conditions. The metering valve has no effect on front brake pressure during hard braking applications.

Hydraulic System

MASTER CYLINDER

The single system master cylinder was used on M375 model chassis up until February 1971. This master cylinder has one hydraulic pressure system, the cylinder has one reservoir and the residual check valve is in the cylinder bore.

A Wagner tandem master cylinder is used with the split hydraulic brake system on M375 chassis produced after February 1971. The rear outlet of the master cylinder is connected to a frame mounted Bendix Hydrovac unit which is in turn connected to the wheel cylinder on each of the front wheel brake assemblies and one wheel cylinder on each of the rear wheel brake assemblies. The front outlet is connected to a second frame mounted Bendix Hydrovac unit which is connected to the other wheel cylinder in each of the rear wheel brake assemblies.

NOTE: *If these components are disconnected for any reason, be careful to reconnect the split hydraulic brake system on the M375 chassis exactly as it was disconnected.*

The tandem master cylinders used on the M300, RM300, RM350, and RM400

are Bendix compensating type with reservoirs cast integrally. They consist of front and rear pistons in tandem, each piston outlet supplies either front or rear brake assemblies only. Piston outlets supplying drum brakes will require a residual valve in that outlet.

The outlets supply the front and rear brake assemblies as follows:

M300: The front outlet supplies hydraulic pressure to the rear drum brake assemblies and the rear outlet the front drum brakes.

RM300: The front outlet to the front disc brakes and the rear outlet to the rear drum brakes.

RM350 and RM400: The front outlet to the rear drum brakes and the rear outlet to the front disc brakes.

On M300 models after February 1971, and RM300 models, the master cylinder pushrod is part of the booster assembly.

Removal and Installation

Single and Dual System on M375 Chassis

1. Disconnect the pushrod from the brake pedal.
2. From the engine compartment, disconnect the brake line from the master cylinder.
3. Remove the 4 master cylinder attaching nuts and washers and withdraw the master cylinder from the bracket.
4. Install the master cylinder in the reverse order of removal.

Tandem Master Cylinder

1. Disconnect the front and rear brake tubes from the master cylinder.
2. Remove the bolt securing the pushrod to the pedal linkage on the RM350 and RM400 models.
3. Remove the bolts attaching the master cylinder to the mounting bracket on the RM350 and RM400 models, or the nuts attaching the master cylinder to the brake booster on the M300 and RM300 models.
4. Remove the assembly from the vehicle.
5. Install the master cylinder in the reverse order of removal.

Overhaul

Single System on M375 Chassis

1. Remove the master cylinder from the vehicle.
2. Clean the outside of the master cylinder thoroughly.
3. Remove the boot, stop retainer,

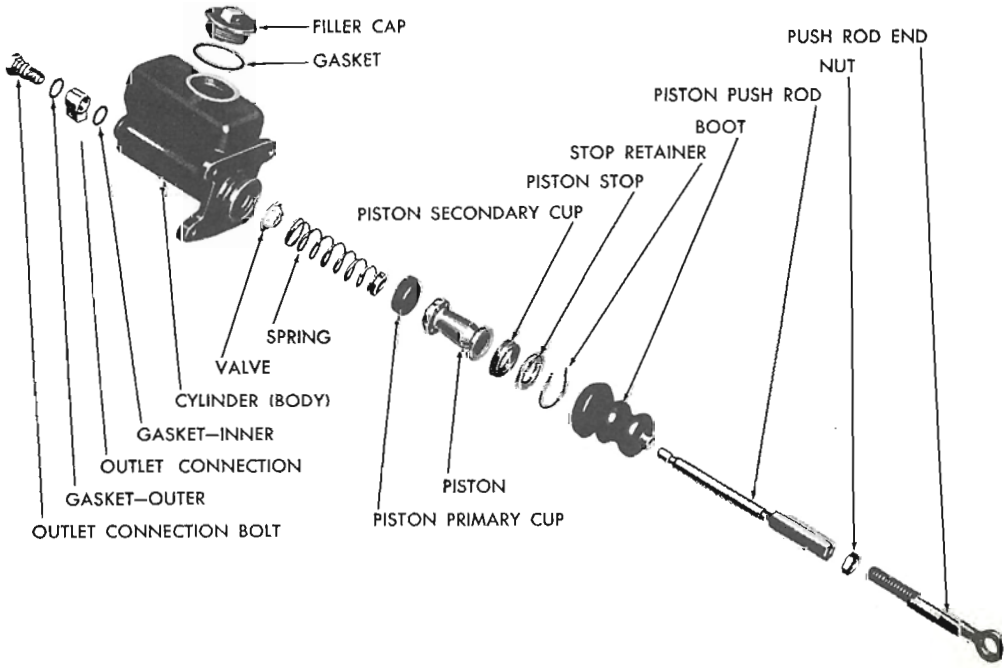

An exploded view of the single system master cylinder installed on the M375 chassis

piston stop and end plug stop. Inspect and replace these parts as necessary.

4. Remove the piston, cups, return spring and valve assembly.

Replace all the old parts with the new parts supplied in the rebuilding kit.

Master cylinder walls with light scratches or signs of corrosion, can usually be cleaned up with crocus cloth. However, cylinders with deep scratches or scoring may be honed provided that the diameter of the cylinder bore is not increased more than 0.002 in.

To assemble the master cylinder:

5. Before assembling the master cylinder, wash the piston, cups and valve in alcohol, dry with compressed air, then dip in clean brake fluid.

6. Install the check valve and spring in the cylinder with the valve toward the outlet of the cylinder.

7. Install the master cylinder cup in the cylinder with the open end of the cup over the closed end of the return spring.

8. Install the secondary cup on the piston and install the piston, piston stop and stop retainer.

9. Install the boot and pushrod.

10. Install the master cylinder in the vehicle.

Tandem System on M375 Chassis

1. Remove the master cylinder from the vehicle.

2. Loosen the shouldered master cylinder cover bolt.

3. Lift off the reservoir cover and cover seal. Pour out any excess brake fluid and stroke the piston to force residual fluid through the outlet ports.

4. Remove the piston stop bolt and gasket from the bottom of the reservoir housing.

5. Remove the retainer ring from the groove in the pushrod end of the cylinder bore with snap-ring pliers.

6. Remove the stop plate. All internal parts should slide out of the cylinder bore easily. If they do not, apply compressed air carefully at the front outlet port. If the parts do not come out of the bore easily, examine the bore carefully for damage which may eliminate the possibility of reconditioning the master cylinder. If such damage is found, replace the master cylinder.

Clean all of the parts in clean brake fluid or alcohol. If the reservoir housing is degreased, finish clean the parts to remove all traces of other solvents. Inspect the cylinder bore for scratches or corrosion. Minor blemishes can be removed with crocus cloth.

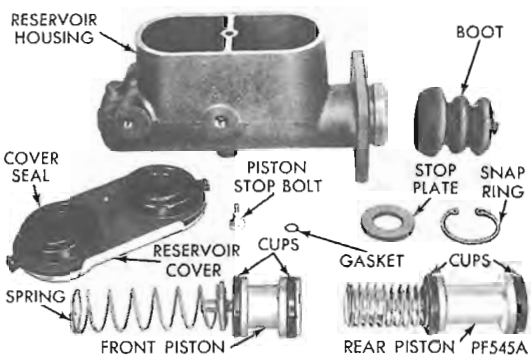

An exploded view of the tandem master cylinder installed on the M375 chassis

NOTE: *Do not oversize the cylinder over nominal inside diameter. Do not hone the cylinder.*

Check the by-pass ports in both reservoirs to make sure that they are open. Probe the ports with soft copper wire 0.020 in. in diameter or smaller. Do not use steel wire to check the ports. This may scratch the master cylinder or cause burrs in the ports.

Remove and discard all rubber parts. Replace all of the old parts with the new parts included in the rebuilding kit.

To assemble the master cylinder:

7. Coat all the parts with brake fluid.

8. Install the rubber seal cup on the rear piston with the cup facing the rear (open end of the cylinder).

NOTE: *All other cups face in the opposite direction (toward the closed end of the cylinder).*

9. Stack and install the front piston spring, pressure cup and piston in the cylinder bore.

10. Install the piston stop bolt and new gasket, making sure that the bolt enters the cylinder bore behind the rear of the front piston. The new gasket is necessary to prevent leaks.

11. Assemble and install the rear piston parts in the cylinder bore.

12. Install the stop plate in the cylinder bore.

13. Compress all the parts in the cylin-

der bore and install the retainer ring in the groove.

14. Install the reservoir cover and seal. Install the pushrod boot.

15. Install the master cylinder in the vehicle.

Tandem Master Cylinder on M300, RM300, RM350 and RM400 Chassis

1. Remove the master cylinder from the vehicle.

2. After cleaning the outside of the cylinder, insert an "easy out" in the tube seat and tighten the tool firmly. Tap gently on the tool with a hammer and remove the tube seat.

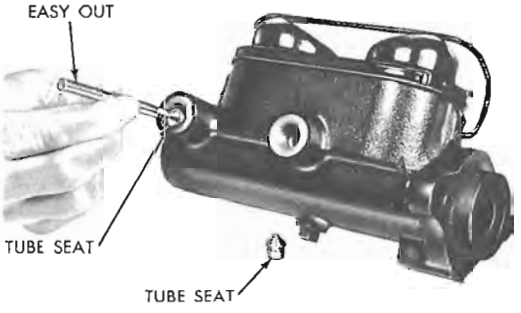

Removing the tube seats

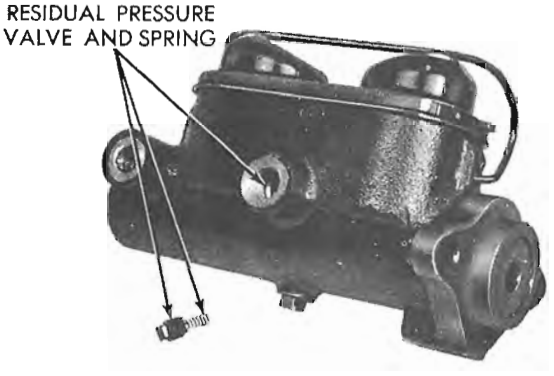

Removing the residual pressure valve(s) and spring(s)

3. Remove the residual pressure valve(s):

a. M300, two valves

b. RM300, one valve at the rear outlet

c. RM350 and RM400, one valve at the front outlet.

4. Slide the clamp off the cover, remove the cover and gasket and drain the brake fluid from the cylinder.

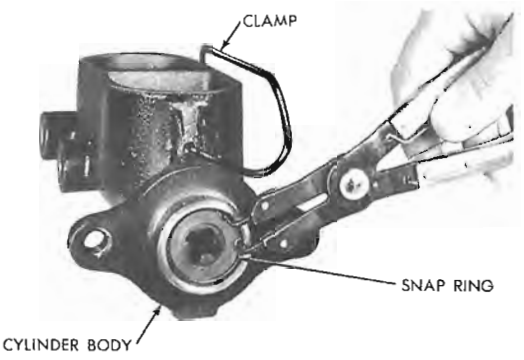

Removing the snap-ring

5. Using snap-ring pliers, remove the snap-ring from the open end of the cylinder.

6. Slide the pushrod and washer out of the cylinder on the RM350 and RM400 models.

7. After removing the front piston retaining screw, carefully remove the rear piston assembly.

8. Slide the front piston assembly from the cylinder.

9. Clean all of the parts in a suitable solvent and blow them dry with dry compressed air. Wash the cylinder bore with clean brake fluid and inspect the bore for scoring or pitting. Master cylinder bore walls that have light scratches or show signs of corrosion, can usually be cleaned with crocus cloth. However, cylinder bores that have deep scratches or scoring may be honed, providing the diameter of the bore is not increased more than 0.002 in. If the master cylinder bore does not clean up at 0.002 in. when honed, the master cylinder should be replaced.

If the master cylinder pistons are badly scored or corroded, replace them.

Use all of the parts furnished in the overhaul kit. Discard all used rubber parts.

10. Before assembling the master cylinder, dip all the components in clean brake fluid and place them on a clean shop towel or paper to drain.

11. Coat the bore of the master cylinder generously with brake fluid.

12. Carefully slide the front piston assembly into the cylinder body.

13. Slide the rear piston assembly into the cylinder body.

14. Compress the pistons and install and tighten the front piston retainer screw.

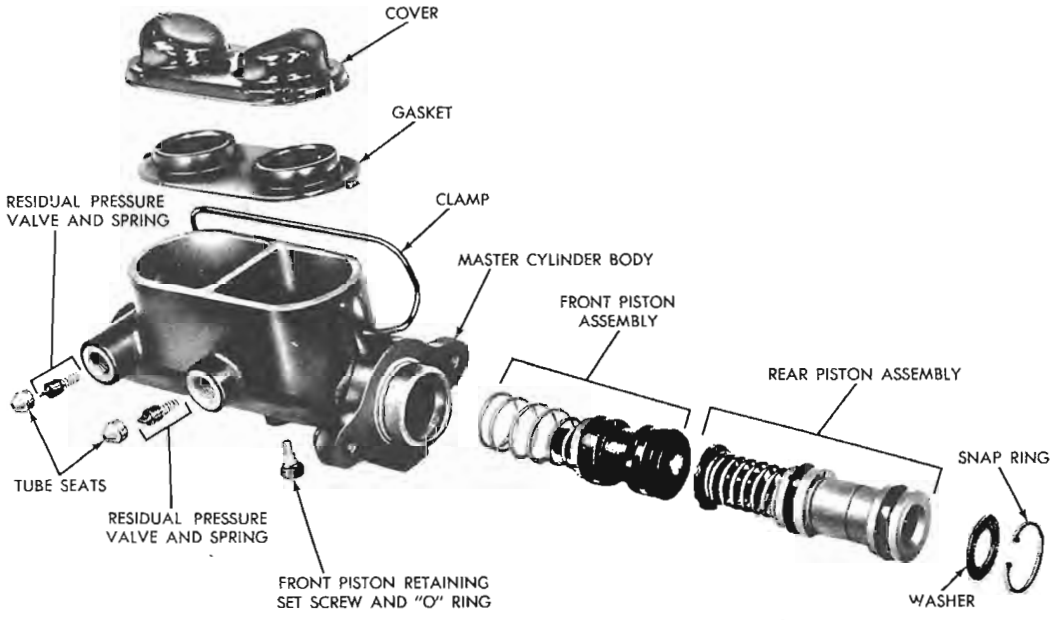

An exploded view of the M300 chassis tandem master cylinder

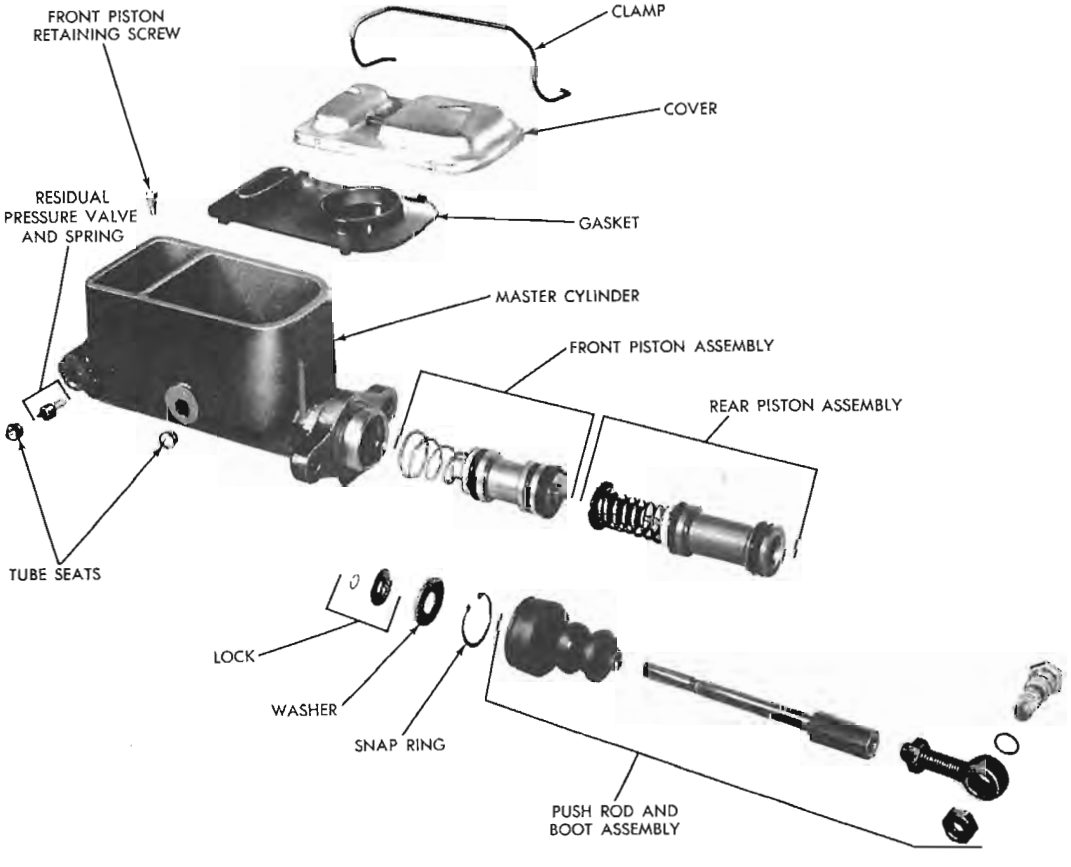

An exploded view of the tandem master cylinder installed on the RM350 and RM400 chassis

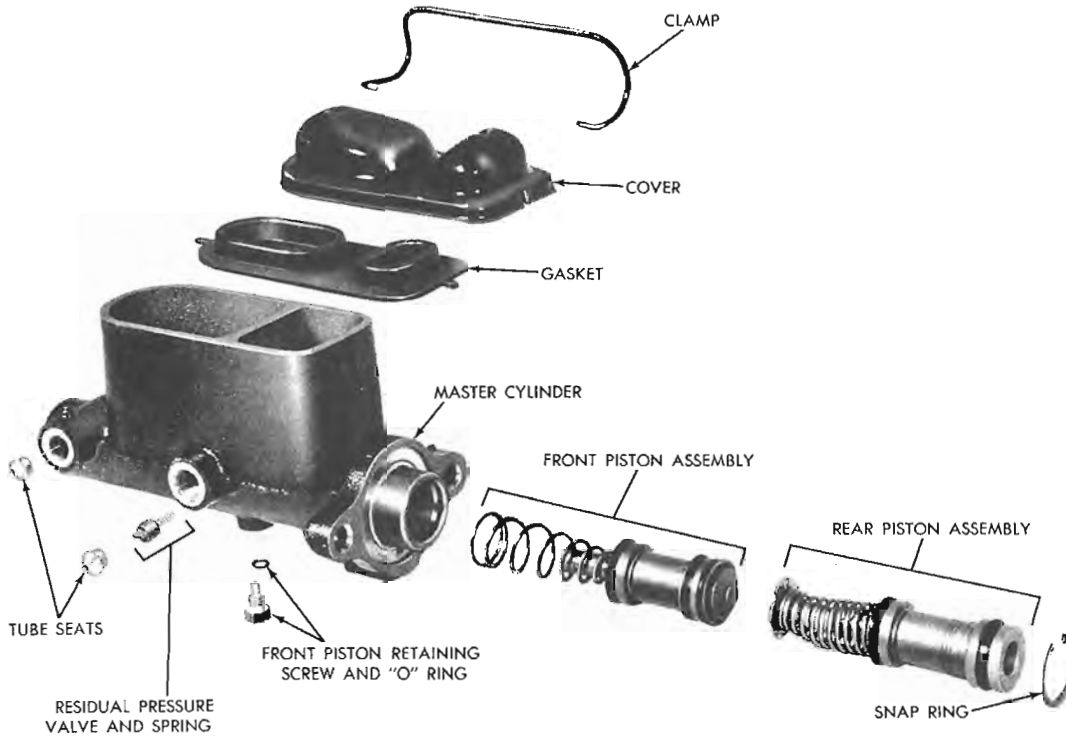

An exploded view of the tandem master cylinder installed on the RM300 chassis

15. Hold the pushrod and washer in position and install the snap-ring on the RM350 and RM400 models. Install the boot (if so equipped).

16. Install the residual pressure valve(s) in the outlet port(s) and install the tube seats firmly.

Before installing the master cylinder on the vehicle it must be bled on the work bench as follows:

17. Clamp the master cylinder in a vise and attach two bleeder tubes to the outlets of the master cylinder. Bend the tubes so that they curve back up into the reservoir.

18. Fill both of the reservoirs with brake fluid.

19. Depress the pushrod slowly and allow the piston to return under spring pressure. Do this several times until all air bubbles are expelled.

20. Remove the bleeding tubes and install the gasket and cover.

21. Install the cover clamp and remove the master cylinder from the vise.

22. Install the master cylinder in the vehicle.

VACUUM HYDRAULIC BOOSTERS

Leak Checks

Midland Ross (C-490G and C-464R, Early M300 and M375)

1. Depress the brake pedal, and apply full pressure. Hold the pedal in this position and start the engine. The pedal should then move downward. If it does not, remove the pipe plug from the rear section of the booster chamber and install a vacuum gauge. Start the engine and check the vacuum gauge. It should read from 16–21 in. of vacuum (Hg). If the vacuum gauge reading is normal, the booster unit is defective.

2. Depress the brake with the engine running. The vacuum gauge should read zero. If it does not, the control valve is malfunctioning.

3. If the gauge reading indicates that the control valve is functioning, again depress the brake pedal to obtain a zero reading on the vacuum gauge. Hold the brake pedal in this position for one minute. Any downward movement of the brake pedal during this period indicates a

fluid leak in the hydraulic system. Any upward movement in this test indicates a fluid leak past the slave cylinder piston check valve.

4. With the engine running, depress the brake pedal with sufficient pressure to show a zero reading on the vacuum gauge. Shut the engine off while maintaining pedal pressure. Hold the pedal in this position for one minute. A pedal kickback indicates a vacuum leak which may be in the manifold check valve, vacuum lines or in the booster unit itself. Perform the next test (Step 5) before trying to locate the leak.

5. Start the engine to create vacuum in the system but do not operate the brakes. Shut the engine off and watch the vacuum gauge. Vacuum should drop off at a rate not exceeding one in. Hg per minute. If leakage is indicated in Step 4 but not in Step 5, the booster unit is at fault. If leakage is indicated in both Step 4 and Step 5, the trouble may be in the manifold check valve, the vacuum line or in the booster unit itself.

Bendix Master VAC (M300 and RM300)

The Bendix Master VAC is an automotive type power brake unit; the vacuum booster being attached directly to the master cylinder.

1. With the engine running at curb idle and the engine at normal operating temperature, check the manifold vacuum level and correct as required (check the torque of the carburetor mounting bolts and intake manifold mounting bolts).

2. Apply the brakes several times with moderate force and note the general relation between pedal travel and force.

3. With the engine off, apply the brakes 6 times to remove booster vacuum reserve. Now apply the brakes with moderate force and again note the relationship between pedal travel and force.

4. If there is a significant difference in feel between Step 2 and Step 3, the booster is operating properly.

5. If there is no significant difference in "feel," either the booster is defective or no vacuum is getting to the booster.

6. Check the vacuum hose from the engine manifold to the booster check valve. If the hose is in good condition and not plugged or closed, replace the booster.

7. With the engine running apply the brakes by hand and slowly release the pedal. Observe whether or not the pedal returns to the fully released position. To determine the fully released position, pull up on the pedal gently and release. The pedal should move up and then drop to its normal position.

8. If the pedal will not fully return, check for an improperly adjusted stop light switch and/or a binding pedal linkage or pedal bolt.

9. If the stoplight switch and pedal linkage are adjusted properly, and the pedal will not fully return to the unapplied position when released, replace the booster.

10. If the pedal appears to return correctly but the complaint is dragging brakes, check the master cylinder for compensation and full return and proper functioning on a work bench before suspecting the booster.

11. With the engine running at slow idle at normal operating temperature, apply the brakes several times and note the relationship between the pedal travel and pedal force.

12. Stop the engine and wait 5 minutes, then apply the brakes one time. The relationship between the pedal travel and force should be the same as with the engine running.

13. If the engine is idling rough remove the vacuum hose from the booster check valve and close the open hose end. If this smooths out the idle, the booster has a major vacuum leak and should be replaced.

Bendix Hydrovac (RM350, RM400, and M375)

1. Install a "T" fitting in the vacuum line to the Hydrovac and connect a vacuum gauge to the "T."

2. Connect a 0–2000 psi hydraulic gauge to the bleed screw port in the output end of the slave cylinder with a bleed screw adapter, to a "T" in the hydraulic line or to a bleed screw in one of the wheel cylinders with a bleed screw adapter. Connection to the most convenient of these points is recommended.

3. Connect a 0–600 psi hydraulic gauge in the input side of the power unit

by installing a "T" in the input hydraulic line. Rebleed the system as necessary to eliminate any air in the system.

4. Apply the brakes without starting the engine to check for hydraulic leaks and agreement between the hydraulic gauges. If the pedal "falls away" under constant pedal pressure or if the gauges indicate a drop in hydraulic pressure, correct any leaks that may exist. If no external leaks are found and the pedal or gauges indicate that a leak is present, then an internal leak is present and must be corrected before proceeding.

5. With the brakes released and the engine running, the vacuum gauge should show about 20 in. Hg ± 3 in.

6. Run the engine for 1 minute with the brakes released and note any drop in the vacuum guage reading. If the rate of vacuum loss exceeds 2 in. Hg in 15 seconds, excessive air is leaking into the system. Shut off the engine.

7. Restart the engine with the brake pedal depressed. If the vacuum system is operating satisfactorily, the brake pedal should move toward the floor.

8. Depress the brake pedal again and observe the gauge readings. The supply vacuum gauge should continue to read manifold vacuum except for a slight fluctuation. The input and output hydraulic gauges should increase smoothly as pedal pressure is increased.

9. Release the brake pedal and note the reading on the output hydraulic gauge. The pressure must decrease smoothly to zero as the pedal is released.

10. With the engine running, depress the brake pedal sufficiently to create about 1,000 psi hydraulic output pressure. Hold the 1,000 psi pressure for about one minute, increasing pedal pressure as necessary. If the pedal requires increased force to maintain the 1,000 psi pressure or if the pedal moves slowly to the floor while maintaining the 1,000 psi pressure, a high-pressure leak is indicated. Check for leaks in the rest of the brake system before removing the Hydrovac for replacement.

11. If the basic hydraulic brake system, the vacuum power system and the Hydrovac are found to be in satisfactory operating condition, the vehicle can be returned to service. Remove all gauges and test equipment. Rebleed the entire hydraulic system, as air has probably entered the system.

Removal and Installation

MIDLAND ROSS (C-490G AND C-464R, EARLY M300 AND M375)

1. Depress the brake pedal several times to remove all the vacuum from the system.

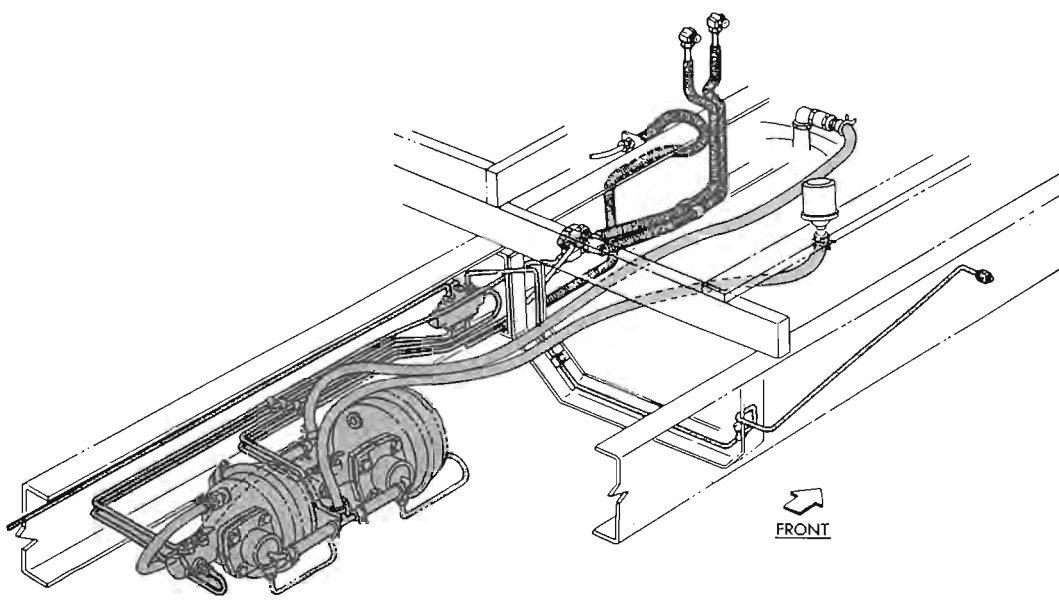

The Midland Ross brake booster installation on the M375 chassis

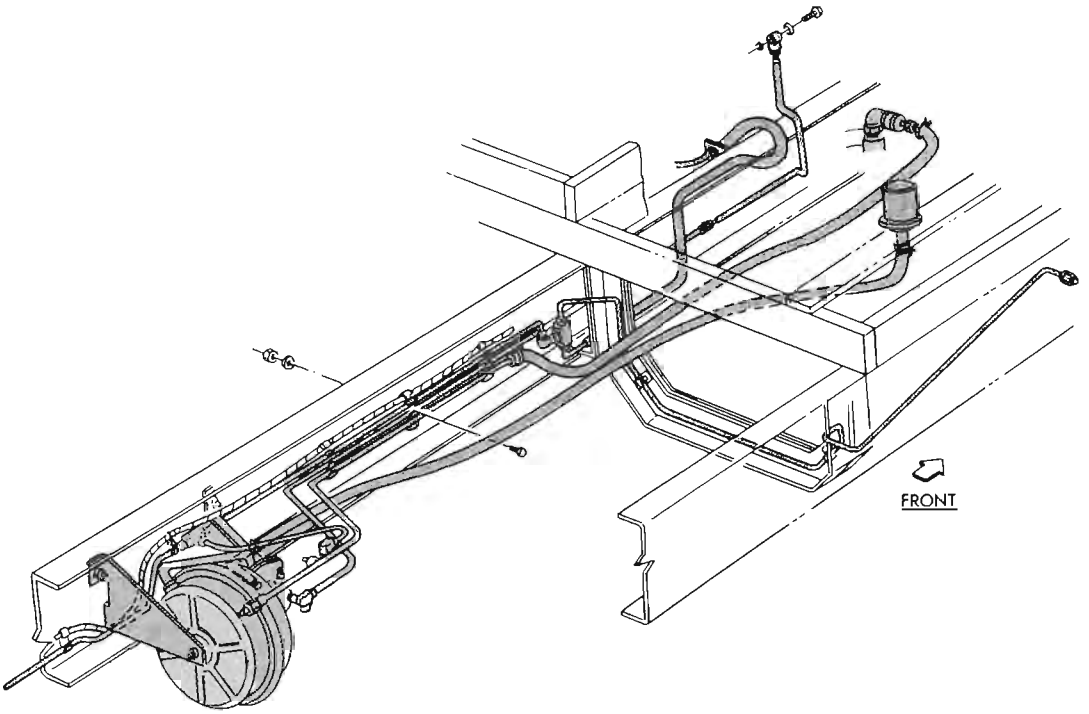

The Midland Ross brake booster installation on the M300 chassis

2. Loosen the air inlet hose clamp and disconnect the air inlet hose.
3. Disconnect the hydraulic line from the master cylinder at the booster.
4. Disconnect the vacuum line hose at the booster.
5. Disconnect the hydraulic line from the booster hydraulic outlet.
6. Remove the vacuum booster mounting bracket bolts and lift the booster from the frame.
7. Install the booster in the reverse order of removal. Bleed the hydraulic system.

Bendix Master VAC (M300 and RM300)

1. Disconnect the brake lines from the primary and secondary outlets on the master cylinder.
2. Remove the nuts attaching the master cylinder to the booster unit, and remove the master cylinder.
3. Disconnect the vacuum line from the check valve. Remove the clamp and disconnect the hose to the brake booster air cleaner from the Master VAC unit.
4. Remove the nut and bolt from the Master VAC pushrod and brake pedal lower lever.
5. Remove the 4 nuts and washers from the studs attaching the booster unit to the pedestal mount. Withdraw the unit from the pedestal mount.
6. Install the Master VAC unit in the reverse order of removal. Bleed the hydraulic system.

Bendix Hydrovac (RM350, RM400, and M375)

1. Wire brush all dirt and mud off the outside of the unit. Remove all oil, grease, and foreign matter.
2. Disconnect all the vacuum and hydraulic lines from the unit and tag them to facilitate reassembly.
3. Disconnect the Hydrovac mounting bracket from the longitudinal frame member and remove the unit from the vehicle.
4. Install the Hydrovac in the reverse order of removal. Bleed the hydraulic system.

BLEEDING THE HYDRAULIC SYSTEM

When any part of the hydraulic system has been disconnected for repair or replacement, air may get into the lines and cause spongy pedal action (because air

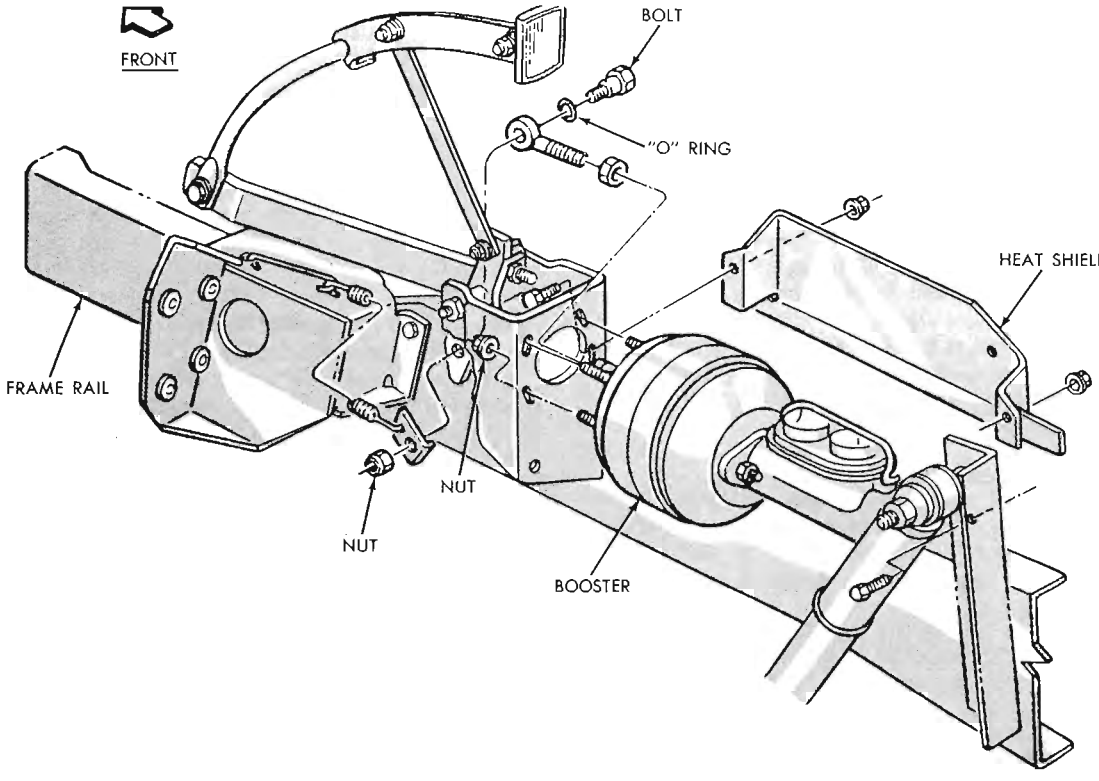

The Bendix Master VAC brake booster installation on the M300 and RM300 chassis

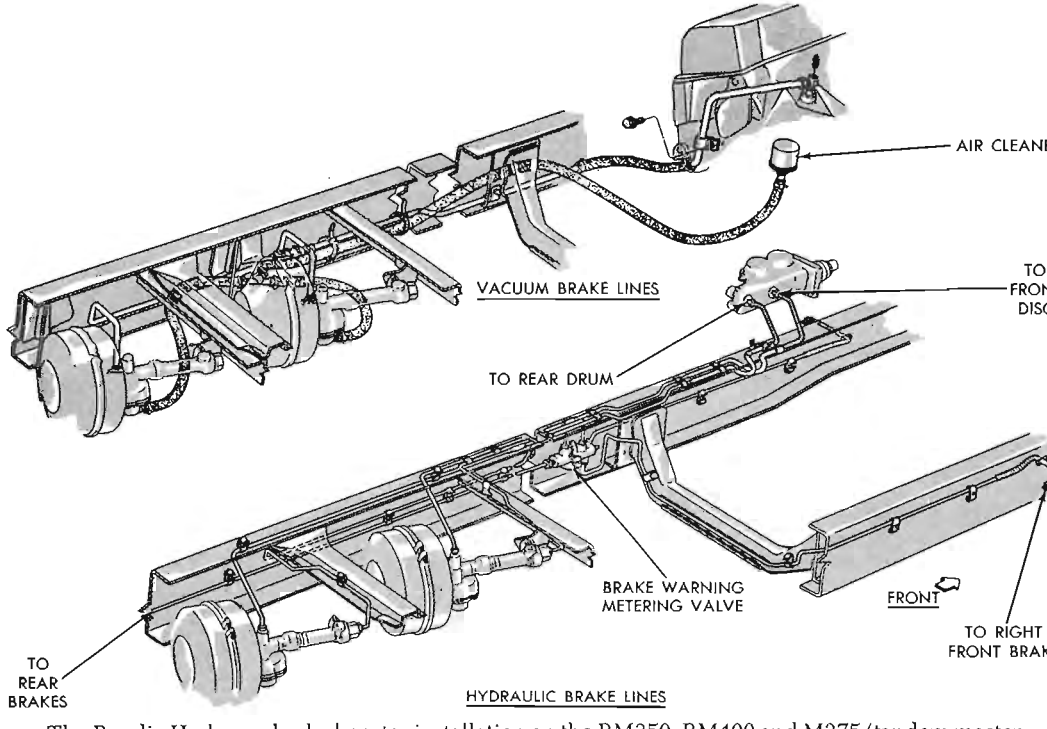

The Bendix Hydrovac brake booster installation on the RM350, RM400 and M375 (tandem master cylinder) chassis

can be compressed and brake fluid cannot). To correct this condition, it is necessary to bleed the hydraulic system after it has been properly connected to be sure that all air is expelled from the master cylinder, slave cylinder units, wheel cylinders and calipers and all the lines connecting the various components.

Bleeder screws are located in each wheel cylinder and caliper and in the slave cylinders of the power brake slave units.

The hydraulic system should be bled in the order the components are arranged in the system as follows:

1. Master cylinder
2. Power brake slave units
3. Wheel cylinder or calipers, in the reverse order of their distances from the master cylinder.

If a wheel cylinder is rebuilt or removed, chances are that you will not have to bleed the entire system from the master cylinder on back. Simply bleed the system from the wheel cylinder that was removed or repaired. Bleed the hydraulic system from the component that was disconnected and all other components "behind" that component, away from the master cylinder.

Master Cylinder

If the master cylinder was removed from the vehicle for rebuilding, it will be necessary to bleed the piston(s) before installing the unit back into the vehicle. Follow the procedure given under the headings "Master Cylinder, Overhaul, Tandem Master Cylinder on M300, RM300, RM350 and RM400 Chassis," Steps 17–20. Until this procedure has been performed, neither manual nor pressure bleeding is likely to dislodge air bubbles in the balance of the system. It may take as many as 20–30 applications of the master cylinder pushrod to dislodge all air bubbles.

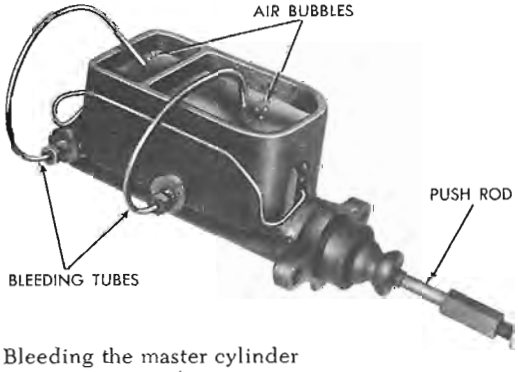

Bleeding the master cylinder

Check for correct master cylinder compensation. Pump the brake pedal vigorously for several strokes, halting with the brake pedal depressed. Observe the reservoir chambers while slowly releasing the pedal. If the compensating port is open, a geyser of fluid will be observed in each reservoir. If no geyser is observed, repeat the procedure several times and then adjust the pushrod length to insure that the master cylinder is compensating correctly.

Power Brake Slave Units

Before bleeding the slave cylinder units make sure that the master cylinder is bled free of all air and filled to the proper level (full) with brake fluid. Bleed the units with no vacuum in the booster system.

1. Have an assistant pump the brake pedal several times to build up pressure in the hydraulic system and stop with the brake pedal depressed and hold in this position.
2. Open the bleeder screw and allow the brake fluid to flow out until your assistant announces that the pedal is depressed to the floor.
3. Close the bleeder screw.
4. Repeat the operation, as necessary, until an uninterrupted stream of brake fluid, free of air bubbles, flows from the bleeder screw. Check the level of fluid in the master cylinder frequently. Don't allow it to drain completely.

Wheel Cylinders and Calipers

Before bleeding the hydraulic system at the wheel cylinders, make sure that the master cylinder and slave cylinder are bled free of air and that the master cylinder is full of brake fluid. Bleed the system with no vacuum in the booster system.

Starting with the wheel farthest away from the master cylinder, attach a bleeder hose (any piece of rubber hose will do) to the nipple of the bleeder screw and insert the other end in a jar. Have your assistant pump the brake pedal several times to build up pressure in the hydraulic system, then holding the brake pedal

depressed. Open the bleeder screw and allow fluid to drain into the jar. When your assistant tells you that the pedal has bottomed on the floor, close the bleeder screw. Repeat this operation until the brake fluid flows into the jar free of all air bubbles. Perform this procedure at all of the wheel cylinders at all of the wheels in their order of closeness to the master cylinder; right rear, left rear, right front, left front.

Brake System

ADJUSTMENT

1. Jack up the vehicle so that the wheel to be adjusted is free to turn. Ideally, all wheels should be free to turn at the same time to gain an accurate adjustment, but this is not absolutely necessary.
2. Remove the adjusting hole cover from the backing plate.
3. Insert an adjusting spoon or a screwdriver with a wide tip into the starwheel adjusting screw. Move the handle end of the tool until a slight drag is felt when the wheel is rotated.
4. Insert a small screwdriver into the brake adjusting hole and push the self-adjusting lever out of engagement with the starwheel. Be careful not to bend the adjusting lever. While holding the self-adjusting lever out of engagement, back off the starwheel until the drum is free of brake drag.
5. Repeat the above adjustment at each wheel. The adjustment must be equal at all wheels. Install the adjusting hole covers in the backing plates.
6. Lower the vehicle and road test it, looking for uneven braking and pulling to one side.

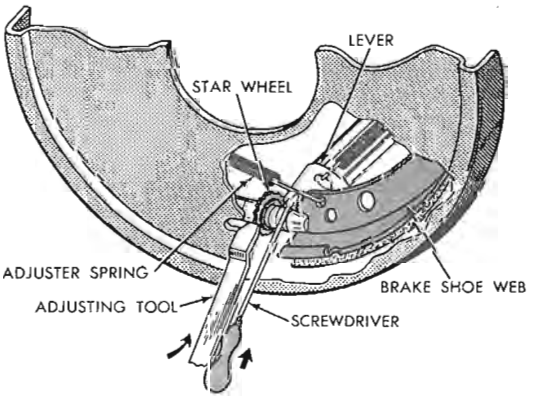

Adjusting the brakes

Front Disc Brakes

Two sliding caliper disc brake assemblies are used on Dodge motor home chassis. The RM300 models use a single-piston caliper and the RM350 and RM400 models use a two-piston caliper.

Operation of the disc brakes and service procedures (except for the number

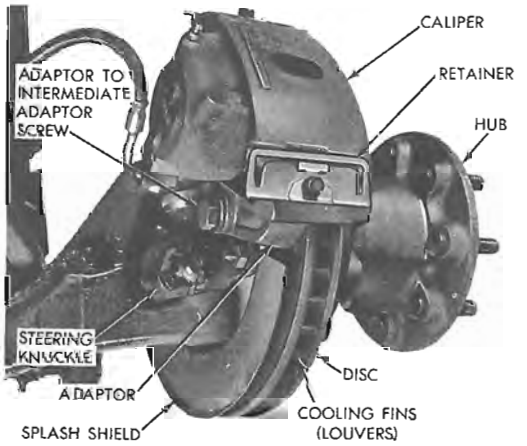

Front view of the single-piston sliding caliper assembly

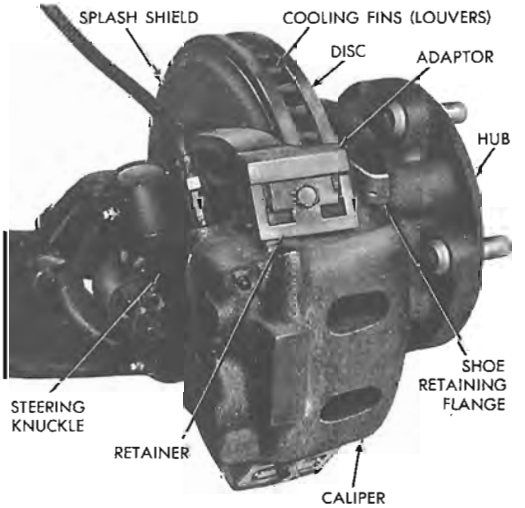

Front view of the two-piston sliding caliper assembly

of pistons and component attachment) are essentially the same for either unit.

Both single-piston and two-piston units consist of a two-piece hub and disc (rotor) assembly, the caliper, shoes and linings (pads), splash shield, and one- (RM300) or two- (RM350 and RM400) piece adapter(s).

DISC BRAKE CALIPERS

Removal and Installation

1. Wire the brake pedal up so that the weight of the pedal will not cause it to fall, exerting pressure within the hydraulic system and forcing the caliper (piston(s) out of the bore(s) when the caliper is removed from the rotor.

2. Raise the vehicle and support it so that the wheel to be worked on is free to turn.

3. Remove the wheel/tire assembly.

4. Remove the screws which retain the retaining clip and anti-rattle spring which hold the caliper to the adapter.

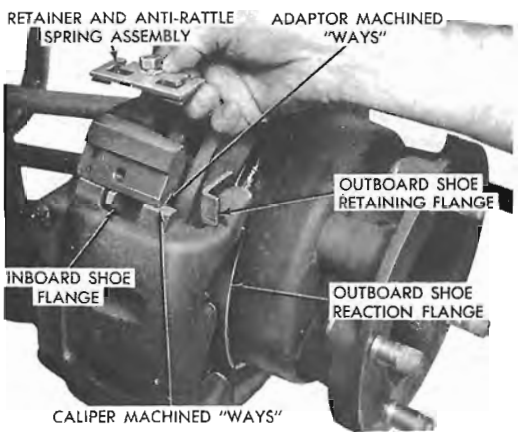

Removing or installing the retaining clip and anti-rattle spring assembly

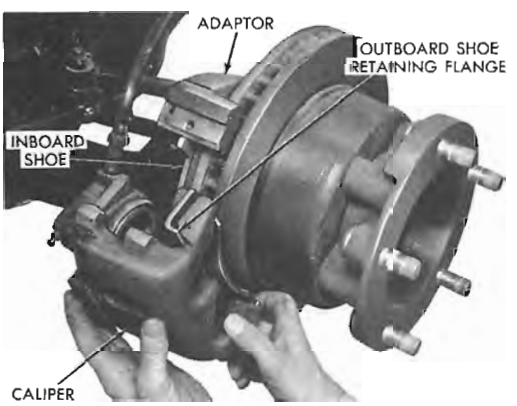

Removing or installing the caliper assembly

5. Carefully slide the caliper out and away from the rotor and adapter.

NOTE: *It is not necessary to remove the flexible brake hose from the caliper when changing the brake pads. If the caliper is going to be overhauled, allow the flexible hose to remain connected until the piston(s) are removed (see the "Overhaul" procedure). Under no circumstances should you allow the weight of the caliper to be suspended by the flexible hose; lay the caliper on the axle or support with a heavy wire hook.*

To install the caliper assembly:

6. Slide the caliper assembly into position in the adapter and over the rotor. Align the caliper on the machined ways of the adapter.

7. Install the anti-rattle spring and retainer assembly and tighten the retaining screws to 235 in. lbs.

8. Attach the flexible brake hose assembly to the caliper, if removed.

9. If the flexible hose was disconnected, allow the caliper to "gravity" fill with brake fluid, then close the bleeder screw after all air has escaped. Fill the master cylinder with brake fluid and bleed the brake hydraulic system.

10. After bleeding the system, check for fluid leaks under maximum pedal pressures.

11. Install the wheel/tire assembly and lower the vehicle.

12. Road test the vehicle and make several stops to wear off any foreign material on the brakes and to seat the linings. The vehicle may pull to one side or the other during the first few stops, but it should not continue.

Overhaul

1. Remove the caliper assembly from the adapter. Do not remove the flexible brake line from the caliper.

2. Remove the caliper pistons in the following manner:

a. Single-piston units: Support the caliper assembly on the axle and steering linkage on shop towels. Carefully depress the brake pedal to hydraulically push the piston out of the bore. The brake pedal will fall away when the piston has passed the bore opening. Prop the pedal in any position below the first 1 in. of pedal travel to prevent

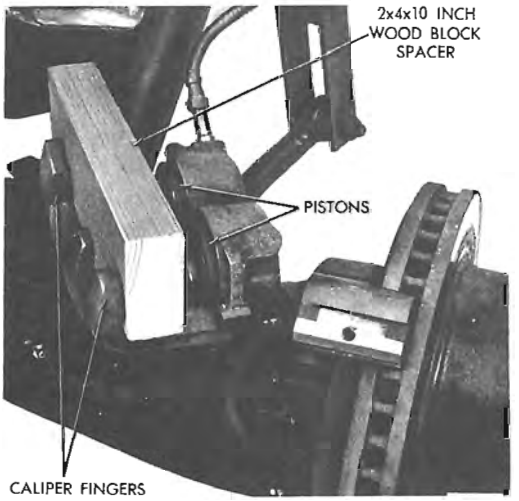

Wood block spacer positioned for removal of the caliper pistons

any further loss of brake fluid. If both front caliper pistons are to be removed, disconnect the flexible brake line at the frame bracket after removing the first piston. Plug the brake tube to remove the piston from the opposite side.

b. Two-piston units: Support the caliper assembly on the axle and steering linkage. Place a 2 x 4 x 10 in. block of wood between the caliper fingers and pistons. The wood spacer must be a full 2 in. thick. This is the allowable dimension to which the piston can be pushed out of the bore and maintain a hydraulic seal. Carefully depress the brake pedal until both the pistons contact the wood spacer. The pistons can now be removed. Disconnect the flexible brake line at the frame bracket and plug the line to remove the pistons from the opposite caliper. Prop the brake pedal up to any position below the first 1 in. of pedal travel to prevent any further loss of brake fluid.

CAUTION: *Air pressure should never be used to remove the piston(s) from the bore(s). Personal injury could result.*

3. Disconnect the flexible brake hose from the caliper assembly, if it has not already been done.

4. Mount the caliper assembly in a vise between two blocks of wood to protect it.

CAUTION: *Excessive vise pressure will cause bore distortion and binding of the piston.*

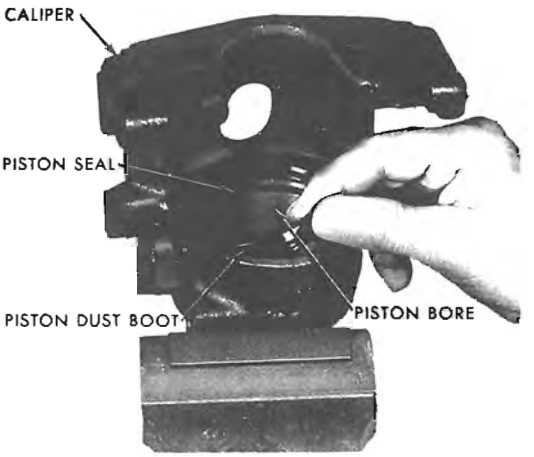

Removing the dust boot(s)

5. Remove the dust boot(s).

6. Using a small, pointed wooden or plastic stick, work the piston seal out of the groove in the piston bore. Discard the old seal. Do not use a screwdriver or other metal tool for this operation because of the possibility of scratching the piston bore or burring the edges of the seal groove.

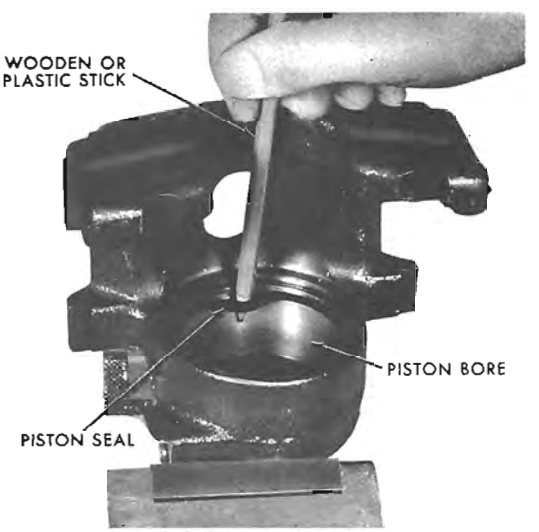

Removing the piston seal(s)

7. Clean all of the parts in alcohol or a suitable solvent and blow them dry with dry compressed air. Blow out all drilled passages and the bore(s). Inspect the piston and piston bore for scoring or pitting. Install a new piston if it is pitted, scored or the plating is severely worn. Bores which show light scratches or corrosion, can usually be cleaned up with crocus

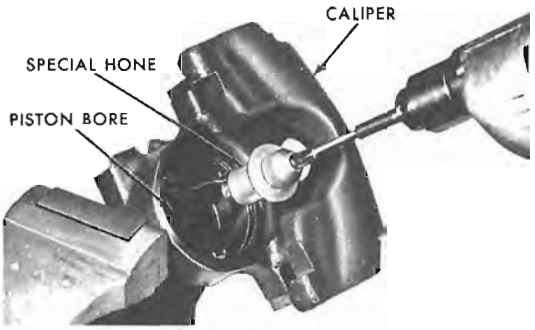

Honing the piston bore

cloth. However, bores which have deep scratches or scoring should be honed, providing that the diameter of the bore is not increased more than 0.002 in. If the bore does not clean up within this specification, a new caliper housing should be installed. Black stains on the piston are caused by the piston seal and will do no harm.

When using a hone, coat the stones and the bore with brake fluid. After honing the bore, carefully clean the seal and boot grooves with a stiff nonmetallic rotary brush. Use extreme care to clean all particles of dirt and grit from the caliper after honing.

NOTE: *Whenever the caliper is disassembled, a new boot and seal must be installed at reassembly.*

8. With the caliper assembly clamped in a vise, install the new piston seal which has been dipped in clean brake fluid in the groove in the piston bore. The seal should be positioned at one area in the groove and gently worked around the groove, using clean fingers, until it is properly seated. Be sure that the seal is not rolled or twisted.

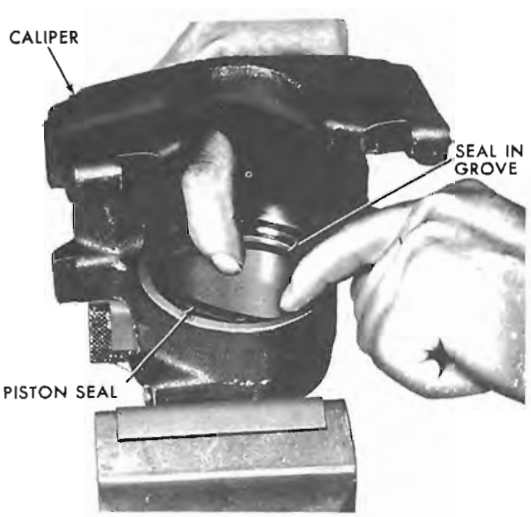

Installing the piston seal

9. Coat the new piston boot with brake fluid. Install the boot in the caliper by working it into the outer groove, using your fingers only. The boot will seem larger than the diameter of the groove, but it will snap into place when it is properly positioned in the groove. Using your forefinger, slide around the inside of the boot to be sure that it is seated and correctly installed.

10. Plug the fluid inlet and the bleeder screw hole (and the opposite piston bore on two-piston units) then coat the piston with a generous amount of brake fluid. With your fingers spreading the boot, work the piston into the boot and press

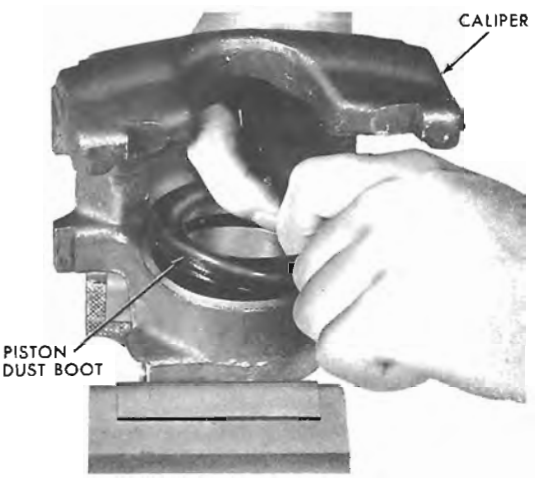

Installing the piston(s) dust boot

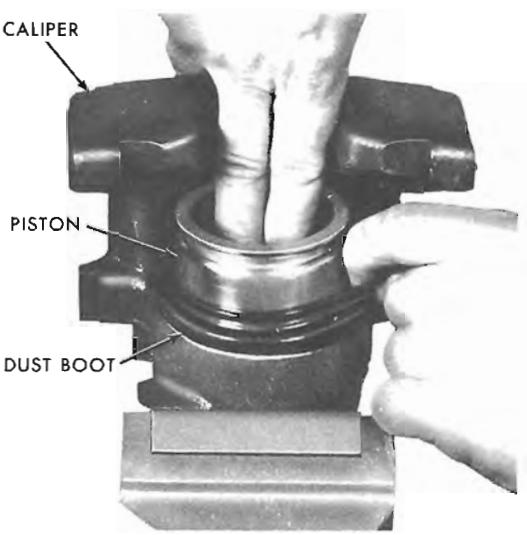

Installing the piston through the boot

down on the piston. The trapped air below the piston will force the boot around the piston and into its groove as the piston is depressed. Remove the plugs from the fluid inlet, bleeder screw hole and the opposite piston hole and carefully push the piston down the bore until it bottoms. Apply force evenly to avoid cocking the piston in the bore.

Install the second piston, if applicable, in the same manner as described above.

11. Install the brake pads and assemble the caliper assembly to the steering knuckle adapter in the reverse order of removal.

DISC BRAKE PADS

Removal and Installation

1. Raise the vehicle and remove the wheel/tire assembly and the caliper assembly. Support the caliper to avoid damage to the flexible brake line hose.

2. Remove the outboard shoe by prying between the shoe and the caliper fingers. The flanges on the outboard shoe will retain the shoe to the caliper.

3. Remove the inboard brake shoe.

NOTE: *Unless the piston(s) are going to be removed from the caliper at this time, support the brake pedal in the up position so that it won't fall under its own weight and push the caliper piston(s) out of the bore(s).*

4. Slowly and carefully push the piston(s) back into the caliper bore(s) until they are bottomed. Watch for possible master cylinder reservoir overflow.

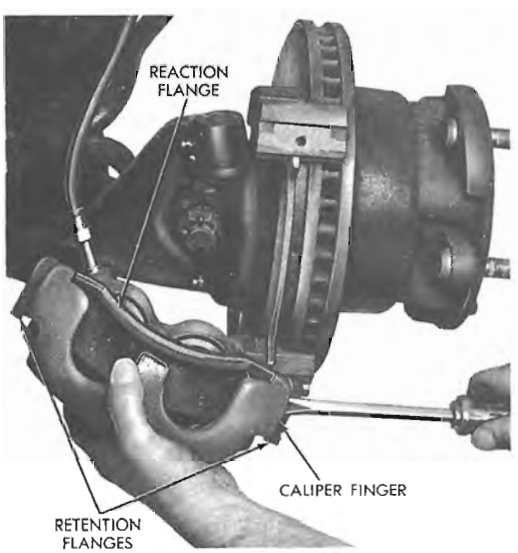

Removing the outboard brake shoe (pad)

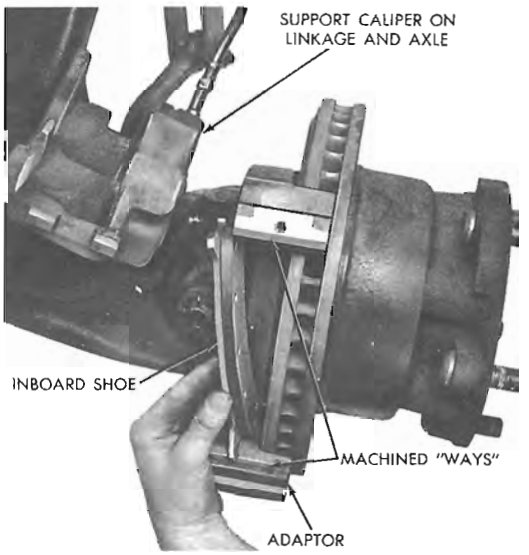

Removing the inboard shoe

5. Slide the new outboard shoe and lining (pad) assembly in the recess of the caliper.

NOTE: *No free-play between the brake shoe flanges and the caliper fingers should exist. Free-play at these points could cause the brake shoes to rattle. If any vertical free-play exists, remove the shoe from the caliper and bend the flanges to create a slight interference fit to eliminate all vertical free-play when the shoe is installed.*

Install the shoe after making the above modification, as necessary, by snapping the shoe into place with your fingers or with a small C-clamp to protect the new lining from damage or contamination by using the old pads over the new lining and across the caliper fingers.

6. Position the inboard shoe in posi-

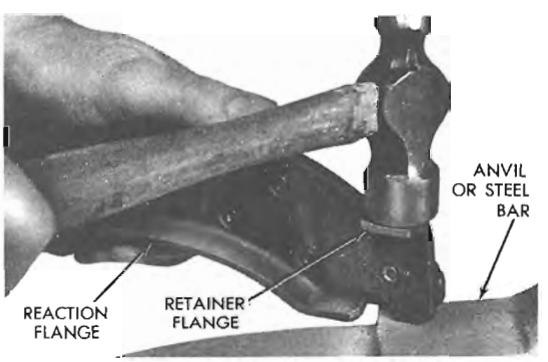

Bending the outboard shoe retainer flange

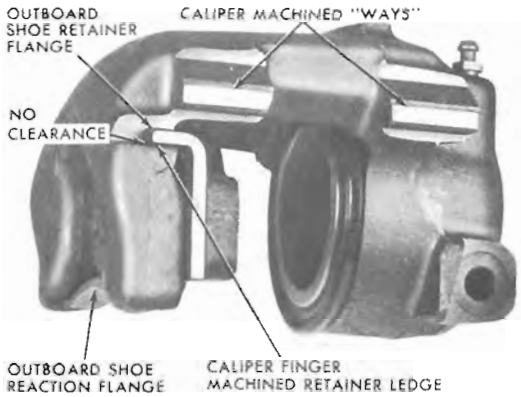

Caliper finger and outboard shoe retainer fit

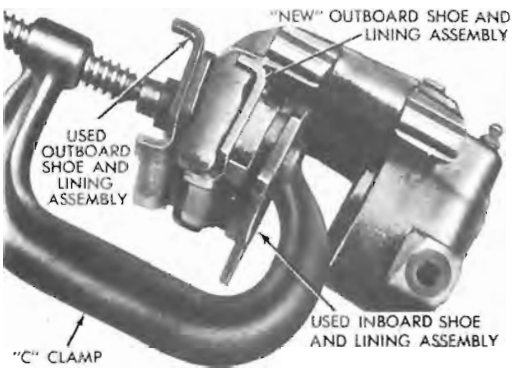

Installing the outboard shoe

tion on the adapter with the shoe "flanges" in the adapter "ways."

7. Slowly slide the caliper assembly into position in the adapter and over the rotor. Align the caliper on the machined ways of the adapter.

NOTE: *Take care not to pull the dust boot(s) from its groove as the piston(s) and boot(s) slide over the inboard shoe.*

8. Install the anti-rattle spring and retainer assemblies.

9. Pump the brake pedal a few times until a firm pedal is obtained.

10. Check the level of brake fluid in the master cylinder if it was necessary to remove fluid from the master cylinder when the piston(s) were pushed down in the bore(s).

It should not be necessary to bleed the system after shoe and lining removal and installation. However, if a firm pedal cannot be obtained, bleed the brake system.

11. Install the wheel/tire assembly and lower the vehicle.

Bendix BX Duo-Servo Drum Brakes

The Bendix Duo-Servo drum brake is a basic dual servo (one double-piston wheel cylinder), single-anchor brake. Front and rear brake assemblies are basically the same, except that the rear brakes on M300 motor home chassis produced after April 1, 1972 include a parking brake lever and cam plate.

The Bendix Duo-Servo brakes are used on the front of M300 and M375 chassis and on the rear of M300, RM300 and RM375 chassis.

BRAKE DRUMS

Removal and Installation

Front

1. Raise the vehicle on a hoist or jacks and install jackstands.
2. Remove the wheel/tire assembly.
3. Remove the dust cover, cotter pin, nut, locknut, washer, and outer bearing. Carefully remove the drum.

NOTE: *If there is interference between the brake shoes and the drum, remove the adjusting hole cover and back off the brake adjustment.*

4. Install the front brake drum in the reverse order of removal. Adjust the wheel bearings.

Rear

1. Raise the vehicle on a hoist or jacks and install jackstands.
2. Remove the wheel/tire assembly.
3. Remove the axle shaft nuts, washers and cones. Rap the axle shaft sharply in the center to release the cones if they do not readily release. Remove the axle shaft.
4. Remove the outer hub nut. Straighten the lockwasher and remove the washer, the inner nut and then the bearing.
5. Carefully remove the brake drum.
6. Install the rear brake drum in the reverse order of removal. Adjust the wheel bearings.

NOTE: *It is possible to remove the brake drums attached to the wheel assemblies. See Chapter 1.*

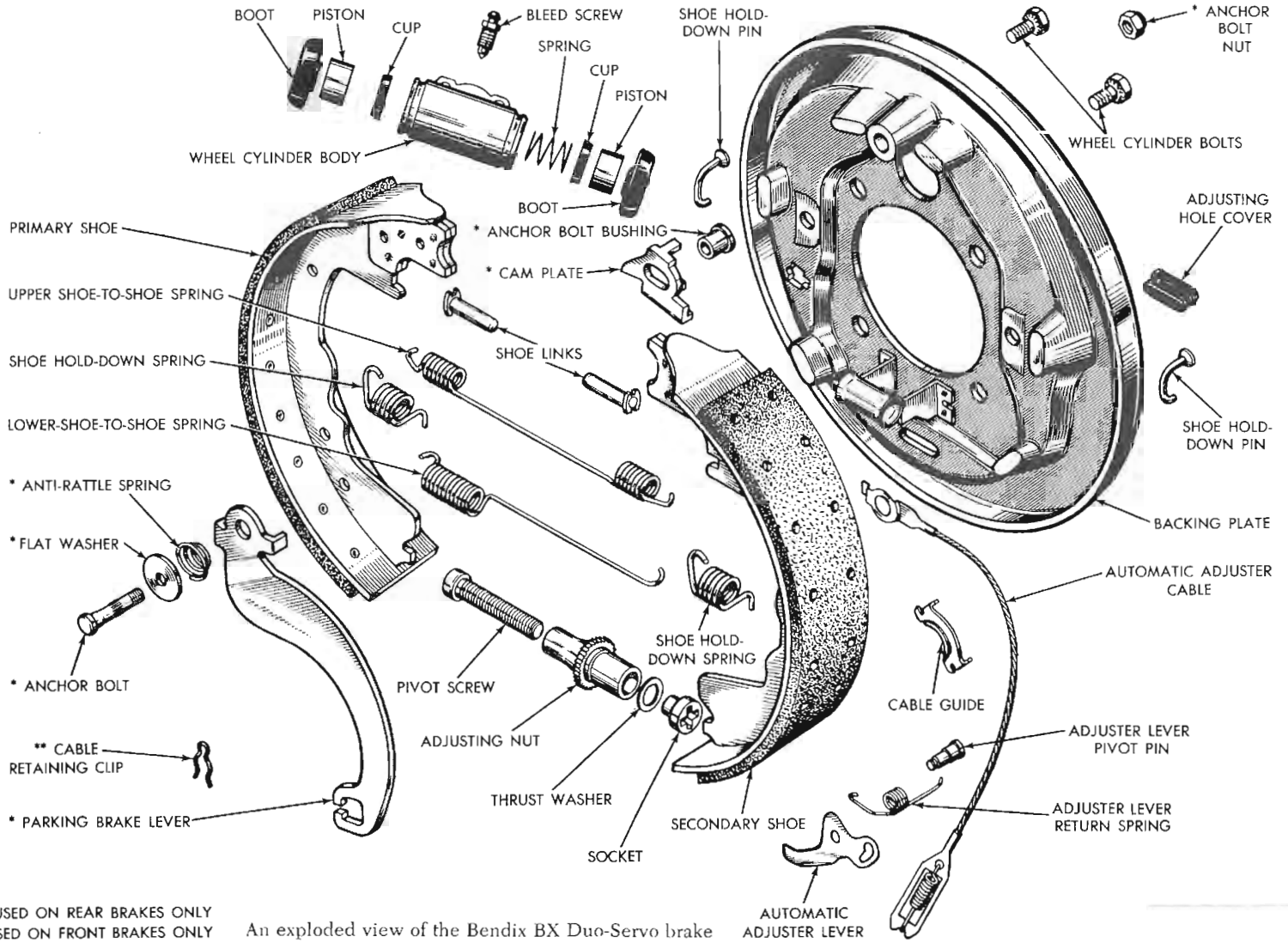

* PARTS USED ON REAR BRAKES ONLY
** PART USED ON FRONT BRAKES ONLY

An exploded view of the Bendix BX Duo-Servo brake

Inspection

After the brake drum has been removed from the vehicle, it should be inspected for run-out, severe scoring, cracks, and the proper inside diameter.

Minor scores on a brake drum can be removed with fine emery cloth, provided that all grit is removed from the drum before it is installed on the vehicle.

Badly scored, rough, or out-of-round (run-out) drums can be ground or turned on a brake drum lathe. Do not remove any more material from the drum than is necessary to provide a smooth surface for the brake shoe to contact. The maximum diameter of the braking surface is shown on the inside of each brake drum. Brake drums which exceed the maximum braking surface diameter shown on the brake drum, either through wear or refinishing, must be replaced. This is because after the outside wall of the brake drum reaches a certain thickness (thinner than the original thickness), the drum looses its ability to dissipate the heat created by the friction between the brake drum and the brake shoes when the brakes are applied. Also, the brake drum will have more tendency to warp and/or crack.

The maximum braking surface diameter specification, which is shown on each drum, allows for a 0.060 in. machining cut over the original nominal drum diameter plus 0.030 in. additional wear before reaching the diameter at which the drum must be discarded. Use a brake drum micrometer to measure the inside diameter of the brake drums.

BRAKE SHOES

Removal and Installation

1. Remove the brake drum.
2. Unhook the adjusting lever return spring from the lever. Remove the lever and return spring from the lever pivot pin. Unhook the adjuster lever from the adjuster cable assembly.
3. Using brake spring pliers or a similar tool, remove the upper shoe-to-shoe spring. Unhook and remove the shoe hold-down springs. On rear brake assemblies disconnect the parking brake cable from the parking brake lever, if so equipped.
4. Remove the shoes with the lower shoe-to-shoe spring and starwheel adjusting screw as an assembly. Unhook the bottom shoe-to-shoe spring and remove the starwheel adjusting screw from the bottom of the shoes.

Clean the backing plate by blowing it off with compressed air or brushing it off with a cloth or brush. Be sure to clean off any dirt that falls on the spindle. Disassemble, clean, lubricate and reassemble the starwheel adjusting screw. Note that the pivot screw and adjusting nut have left-hand threads on the left brake assemblies and right-hand threads on the right brake assemblies.

Lubricate the guide pads on the backing plate with Lubriplate.

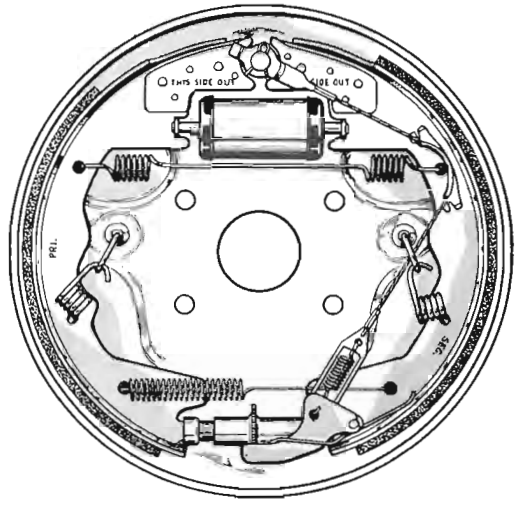

Bendix BX Duo-Servo front brake assembly

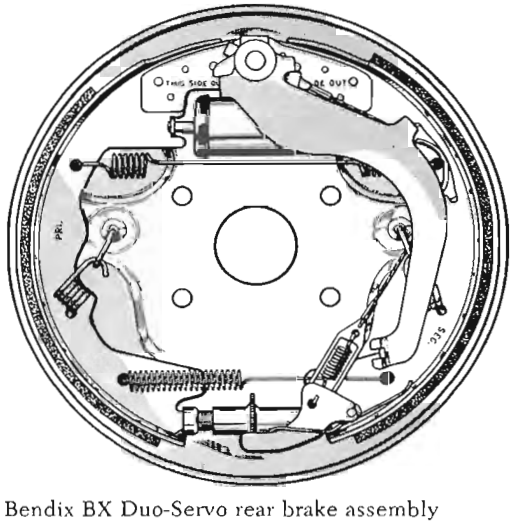

Bendix BX Duo-Servo rear brake assembly

5. Assemble the starwheel, lower shoe-to-shoe spring and the primary and secondary shoes and position them on the backing plate. On rear brakes connect the parking brake cable to the parking brake lever.

NOTE: *The brake shoes are identified as "Sec" (secondary) and "Pri" (primary) and "this side out" for easy placement on the backing plate. The primary shoe lining faces toward the front of the vehicle and the secondary shoe lining toward the rear.*

6. Install and hook the hold-down springs.

7. Replace the upper shoe-to-shoe spring.

8. Install the cable and retaining clip.

9. Position the adjuster lever return spring on the pivot. Green springs are installed on the left brakes and red springs on the right.

10. Install the adjuster lever. Route the adjuster cable and connect it to the adjuster.

WHEEL CYLINDERS

Overhaul

1. Remove the brake drum.

2. Flip the edge up on the boots on both ends of the wheel cylinders to look for evidence of a brake fluid leak. A slight amount of fluid on the inside of the boot may not be a leak, but may be preservative oil used on assembly.

3. In case of a leak, remove the brake shoes and disassemble the wheel cylinder by removing the boots and pushrods, and pushing the pistons, cups, and spring out either end of the wheel cylinder.

NOTE: *If the brake shoe linings are soaked with grease or brake fluid, they must be replaced.*

4. Wash the wheel cylinder bore with clean brake fluid and inspect the bore and piston for pitting or scoring.

Cylinder bore walls that have light scratches, or show signs of corrosion, can usually be cleaned up with crocus cloth, using a circular motion. However, cylinder bore walls that have deep scratches or scoring may be honed, providing that the diameter of the cylinder bore is not increased more than 0.002 in. A wheel cylinder which does not clean up at 0.002 in. should be discarded and a new wheel cylinder installed. Black stains on the cylinder bore walls are caused by the piston cups and will do no harm.

Use extreme care in cleaning the wheel cylinder after reconditioning. Remove all dust or grit by flushing the cylinder with alcohol or brake fluid. Dry the wheel cylinder with dry compressed air.

If it is necessary to replace the wheel cylinder, remove the old wheel cylinder as follows:

5. Disconnect the brake hose from the brake tube at the frame bracket (front wheels) or, disconnect the brake tube from the wheel cylinder (rear wheels).

6. Disconnect the brake hose from the wheel cylinder (front wheels only) and remove the wheel cylinder attaching bolts, then slide the wheel cylinder out of the support.

Before assembling the wheel cylinder flush all of the components liberally with brake fluid and assemble the wheel cylinder as follows:

7. Install the expansion spring in the cylinder. Install the wheel cylinder cups in each end of the cylinder with the open end of the cups facing each other.

8. Install the wheel cylinder pistons in each end of the cylinder with the recessed end of the pistons facing the open ends of the cylinder.

9. Install the boots over the ends of the cylinder. Keep the assembly compressed with the aid of a brake cylinder clamp until the wheel cylinder is installed on the backing plate and the brake shoes are assembled.

10. Slide the wheel cylinder into position in the support (backing plate). Install the attaching bolts and tighten them securely.

11. Apply sealing putty around the wheel cylinder to prevent any water or dirt from entering the brake assembly.

12. Connect the flexible hose to the wheel cylinder.

NOTE: *Connect the brake hose at the front wheels to the wheel cylinder first before installing it to the frame bracket. If the hose is connected to the front wheel cylinder last, the hose will twist when it is tightened into the wheel cylinder.*

Twinplex Two-Cylinder Floating Shoe Brakes

These brake assemblies are used only on the rear wheels. They are a two-shoe, double-acting, non-servo floating type brake with an adjusting screw for each shoe. Two double-piston wheel cylinders are used in this design and are equally effective in forward and reverse directions due to the non-servo effect.

The Twinplex two-cylinder brakes are used on the following model chassis:

a. The M375 models up to February 1971 have a single hydraulic system and the wheel cylinders are interconnected.

b. The M375 models after February 1971 have a split hydraulic system and the brake actuation is split front and rear. Each rear wheel cylinder is fed individually.

c. RM400 models use dual hydraulic systems and the rear wheel cylinders are interconnected.

BRAKE DRUMS

Removal and Installation

The brake drums are removed and installed in the same manner as those used on Bendix BX Duo-Servo drum brakes, discussed previously in this Chapter.

BRAKE SHOES

Removal and Installation

1. Remove the wheels and drums. Install wheel cylinder clamps to hold the pistons in the cylinders.
2. With spring pliers, slip the loop ends of the shoe retracting spring off the anchor pin.
3. Remove the shoe hold-down lock wires or cotter keys and castellated nuts and lift off the shoes. The anchor pins should pull out of the anchor support (backing plate) easily.
4. Dismantle the adjusting mechanism. Remove the adjuster lock springs by loosening their hold-down screws or moving the snap-ring out of position.
5. Thread each adjusting screw from the shoe side of its support.
6. Lift the starwheels from the slots in the brake shoes.
7. Install the brake shoes in the reverse order of removal.

WHEEL CYLINDERS

Removal and Installation

1. Remove the wheel/tire assemblies, brake drums and brake shoes.

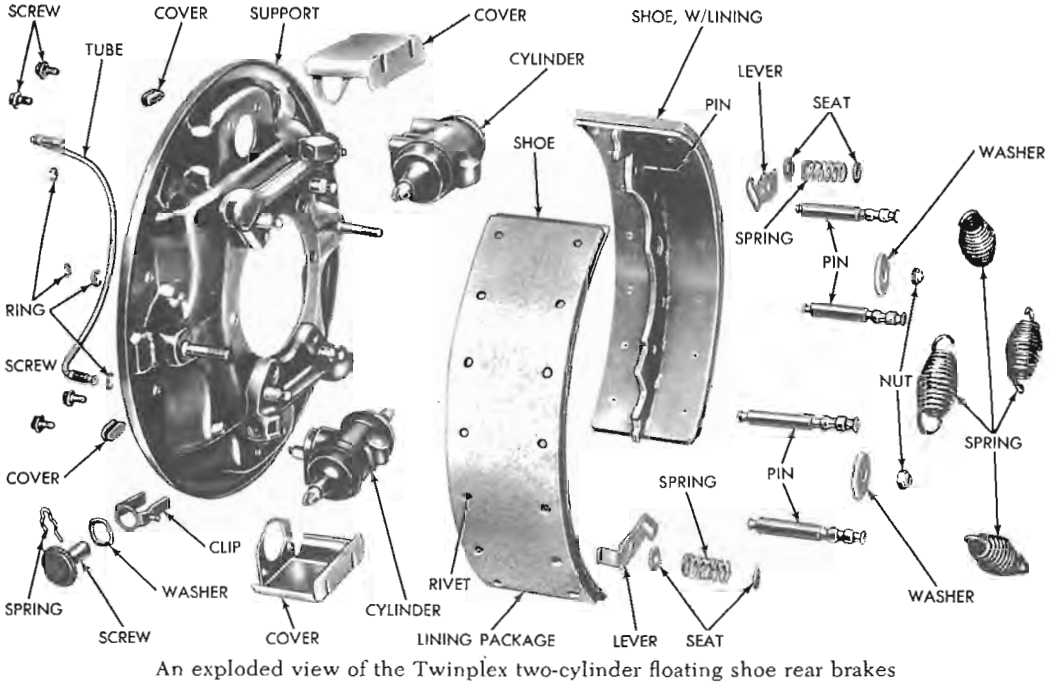

An exploded view of the Twinplex two-cylinder floating shoe rear brakes

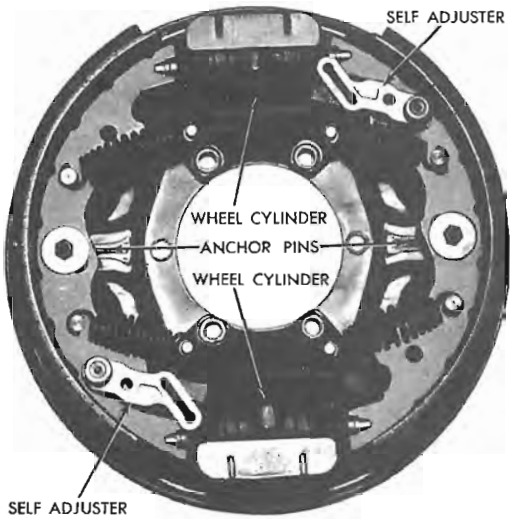

An assembled view of the Twinplex two-cylinder floating shoe rear brakes

2. Remove the wheel cylinders by uncoupling the connector tubes and removing the mounting bolts.

NOTE: *Be sure to note the positioning of the tubing to avoid any errors in assembling the tubes to the wheel cylinders. If the tubes are installed wrong, difficulty may be encountered when trying to bleed the wheel cylinders.*

3. Install the wheel cylinders in the reverse order of removal.

Overhaul

The wheel cylinders of the Twinplex brakes are overhauled in the same manner as given for the Bendix BX brakes discussed previously in this Chapter.

Parking Brakes

Two types of parking brakes are used on Dodge motor home chassis:

The transmission brake, mounted on the output shaft of the transmission of early M300 and all M375 and RM400 chassis, is a self-contained, two-shoe, internal expanding unit.

The rear wheel parking brake uses the existing rear service brakes, mechanically applied by hand-operated lever and cable assemblies from the driver's compartment. The rear wheel parking brakes

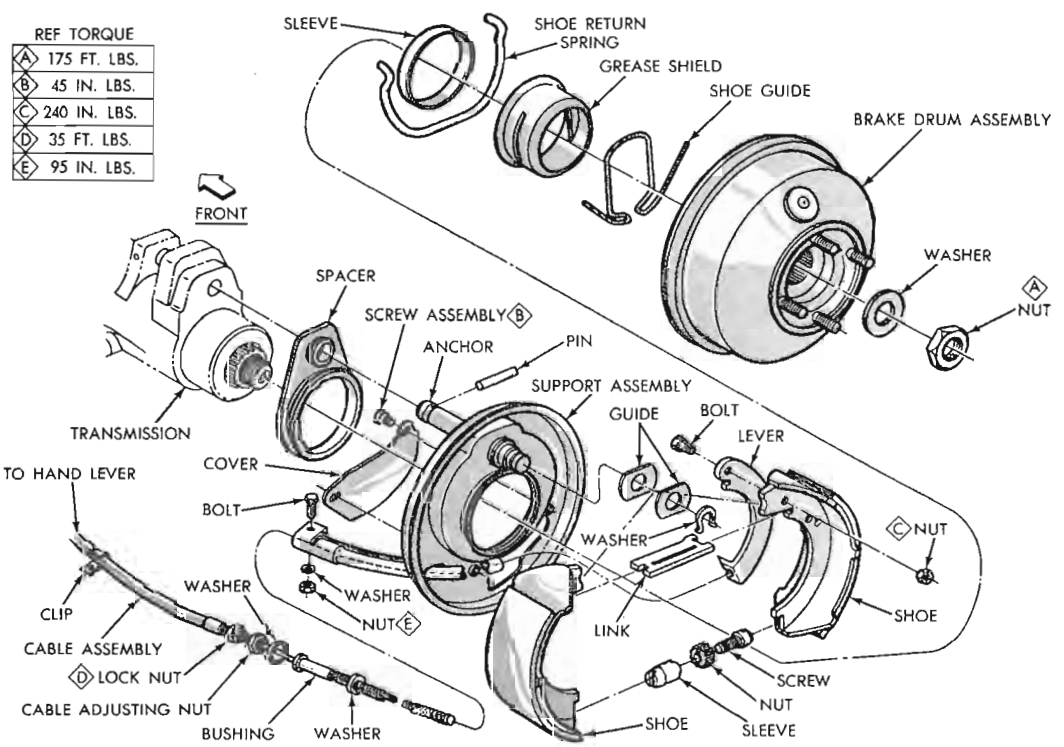

An exploded view of the transmission-mounted parking brake

are used on late model M300, and all RM300 and RM350 chassis.

REAR WHEEL PARKING BRAKE CABLES

Removal and Installation

The two independent rear brake cables are attached to an equalizing bar. The rear ends of the brake cables are clipped to the brake backing plate.

1. Jack up the rear end of the vehicle and fully release the rear brakes by adjusting the starwheels. Remove the wheel/tire assemblies and the brake drums.
2. Remove the brake shoe return springs and hold-down springs and pins.
3. Remove the parking lever anchor bolt, flat washer, anti-rattle spring and lever.
4. Pull off the horseshoe clip and disengage the cable from the lever.
5. Compress the retainers on the end of the brake cable housing and remove the cables and housing from the brake backing plate.
6. Remove the retaining bolt and nut from the brake cable bracket and clips at the frame.
7. Disconnect the brake cable from the equalizer bar and remove the cable assembly.
8. Before installing a new cable, lubricate the cable with grease at all points of contact.
9. Insert the brake cable and housing into the frame bracket and install the retaining clips.
10. Engage the end of the brake cable into the equalizer bar.
11. Insert the rear end of the cable and housing into the brake backing plate. Be sure that the housing retainers lock firmly into place.
12. Insert the end of the brake cable into the parking brake lever and install the brake shoes on the backing plate.
13. Install the brake shoe hold-down springs and pins, return springs, brake drums and wheels.
14. Connect the brake cable bracket.
15. Adjust the brakes and brake cable.

TRANSMISSION BRAKE

Adjustment

1. Disconnect the driveshaft at the parking brake flange.
2. Remove the adjusting screw cover plate.
3. Loosen the brake cable clamping bolt and back off the cable adjusting nut.
4. Turn the brake shoe adjusting nut to decrease the shoe-to-drum clearance until a slight drag is felt on the drum as it is rotated.
5. Back the adjusting nut off at least one full notch.

NOTE: *Make sure that the two raised shoulders on the adjusting nut are*

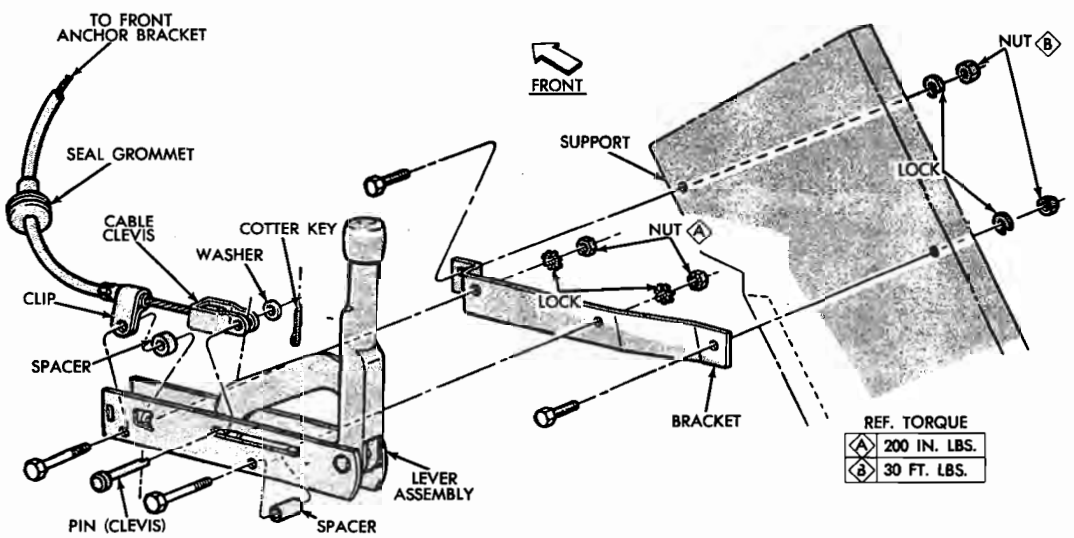

The control handle assembly for the rear wheel parking brakes

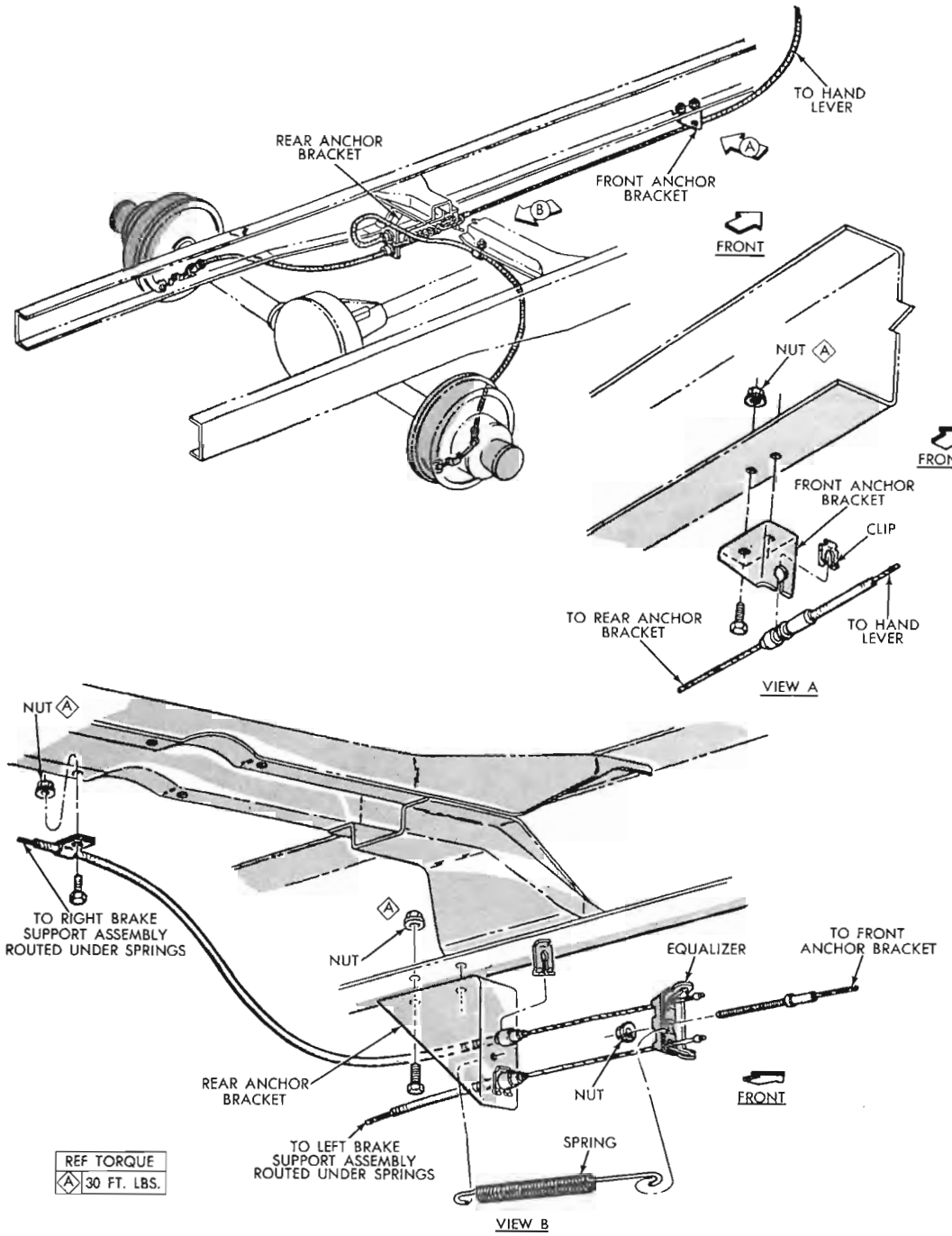

Routing of the rear wheel parking brake cables

seated in the grooves on the adjusting sleeve.

6. The cable length adjusting nut should be positioned against the cable housing so that there is at least 0.050 in. clearance, but not more than 0.010 in. clearance, between the operating lever and the brake shoe cable. Tighten the brake cable clamping bolt securely to lock the adjustment.

7. Tighten the cable adjusting nut against the housing.

8. Install the adjusting screw cover plate and connect the driveshaft.

9. Check the operation of the parking brake.

Brake Specifications

(All measurements are given in in.)

Model	Master Cylinder Bore Diameter		Wheel Cylinder or Caliper Bore Diameter			Brake Rotor Thickness or Drum Diameter		
			Front			Front		
	Disc	Drum	Disc	Drum	Rear	Disc	Drum	Rear
M300 (Early)	—	1.250	—	1.125	1.250	—	12.125	13.000
(Late)	—	1.125	—	1.125	1.060	—	12.000	12.000
M375 (Early)	—	1.500	—	1.500	1.380	—	14.120	14.125
(Late)	—	1.750	—	1.063	1.375	—	14.000	14.120
RM300	1.125	—	3.100	—	1.000	1.190	—	12.000
RM350	1.250	—	2.380	—	1.060	1.550	—	12.000
RM400	1.250	—	2.380	—	1.375	1.550	—	15.000

10 · Water and Sewage

Water System

Two types of water systems are used in Winnebago motor homes: an air-pressurized system with metal tank(s), and a demand system with plastic tank. The air-pressurized system has an electric motor-driven air compressor which pumps air into the top of the metal storage tanks. The demand water system has an electric motor-driven water pump which draws water out of the storage tank on demand (when a faucet is opened).

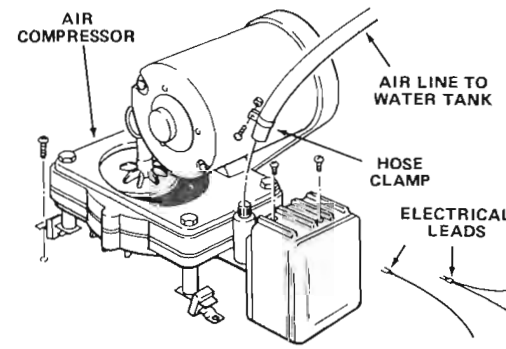

Air compressor assembly

WATER PUMP

Removal and Installation

To remove the water pump, it will be necessary to drain the water tank. Turn the pump switch to the Off position. Disconnect the electrical leads, noting their position for reinstallation, loosen the necessary hose clamps, remove the hoses from the inlet and outlet, remove the mounting screws and remove the water pump. Install the water pump in the reverse order of removal.

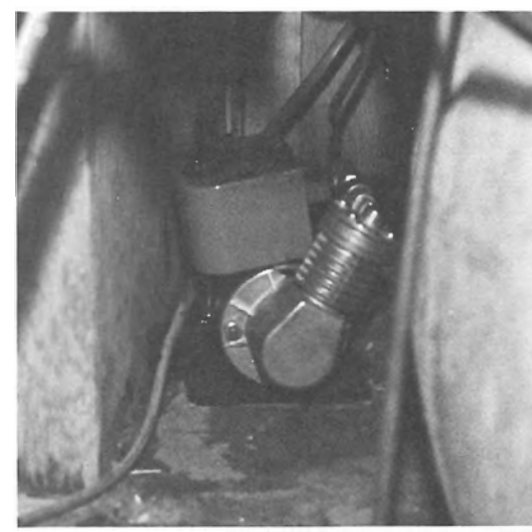

Water system air pump. This particular model is installed alongside the water tanks under a rear gaucho bed

AIR COMPRESSOR

Removal and Installation

Before disconnecting the air compressor from the system, you should first

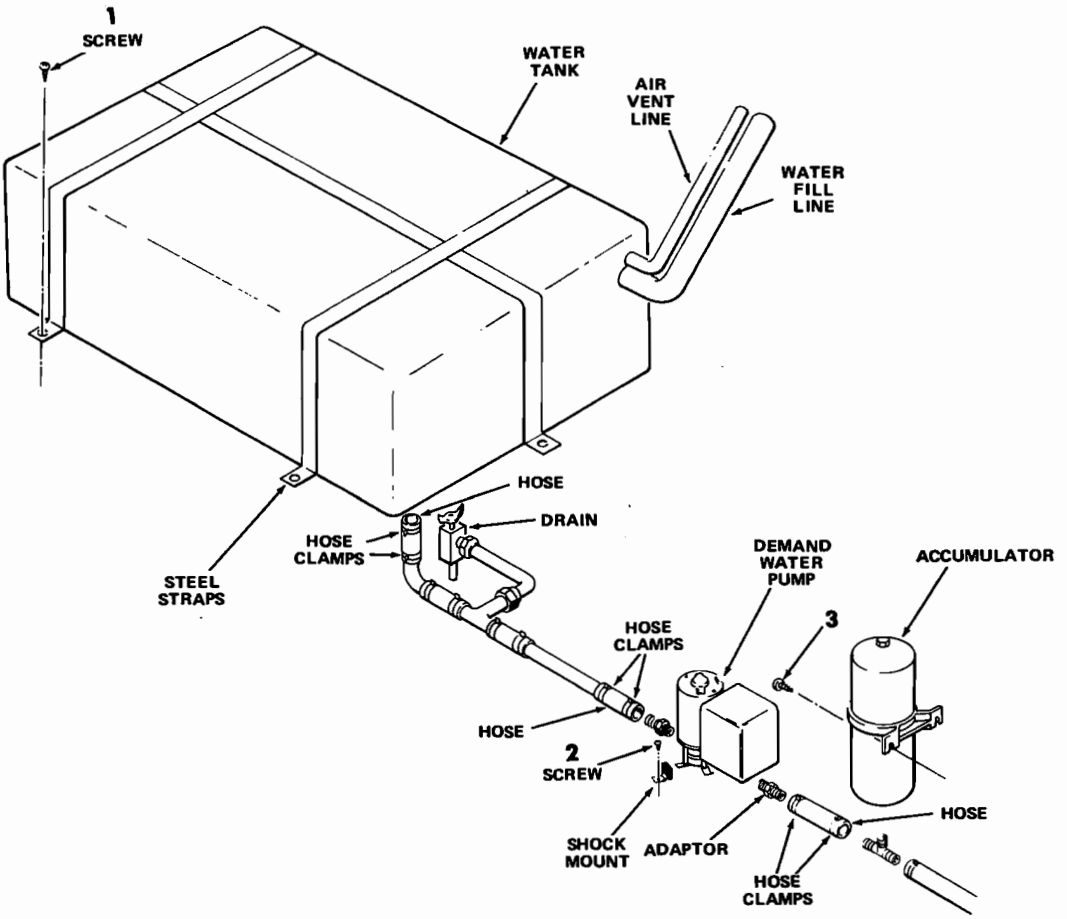

Plastic water tank and demand type water pump assemblies

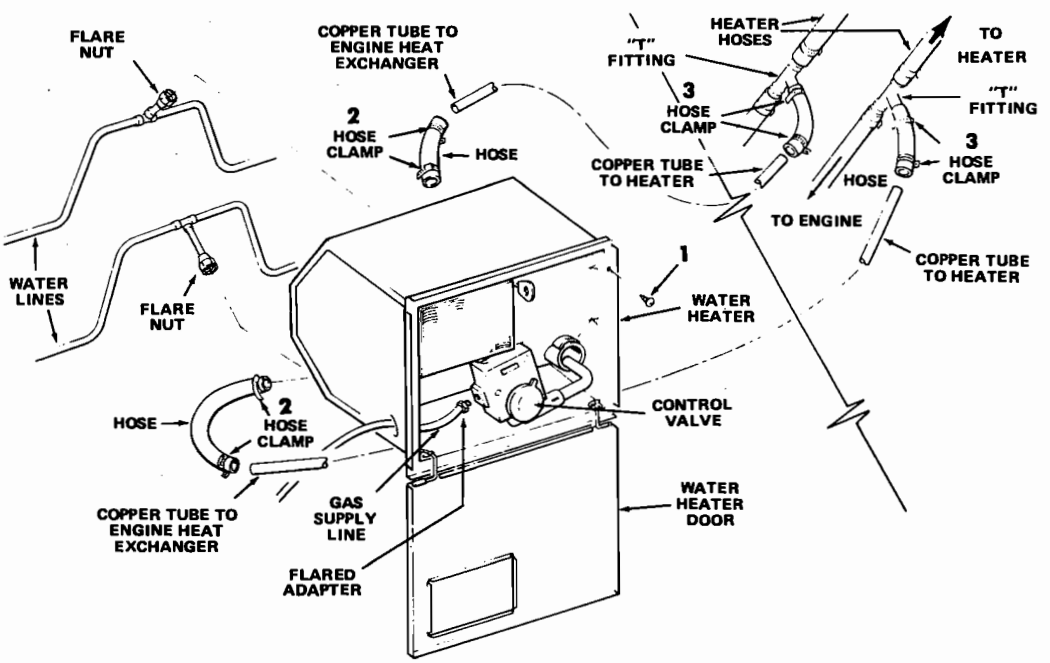

The hot water heater

bleed all air pressure from the water tank. Disconnect the electrical leads at the motor, labeling them for reinstallation, loosen the air hose clamp and remove the hose from the compressor and remove the mounting screws and remove the unit. Install the air compressor in the reverse order of removal.

WATER HEATER

Removal and Installation

1. Turn off the LP gas supply at the gas tank(s).
2. Depressurize the water system. Turn off the air compressor and open the air vent petcock at the water fill spout; or, on the demand water systems, simply shut off the pump.
3. Disconnect the inlet and outlet connections at the water heater.
4. If the motor home is equipped with an engine heat exchanger, loosen the two hose clamps at the water heater and remove the two hoses. Be prepared to have engine coolant run out of these two hoses.
5. Remove the gas supply line from the water heater control valve.
6. Remove the water heater door.
7. Remove the water heater attaching screws from around the outside edge of the unit and remove the water heater from the vehicle.
8. Install the water heater in the reverse order of removal, installing the access door last.

NOTE: *Don't forget to replenish the supply of engine coolant, as necessary.*

Sewage

TOILET

Removal and Installation

1. Turn off the water supply to the toilet.
2. Loosen and disconnect the water supply line at the toilet.
3. Loosen and remove the nuts and washers attaching the toilet to the floor flange, and remove the toilet. If the toilet is in the shower pan, the silicone seat around the base will have to be cut.
4. Replace the toilet in the reverse order of removal. Reseal the base with silicone sealer if the toilet is located in the shower pan.

THERMASAN

The Thermasan is a waste disposal or, more appropriately, a waste destruction system. It utilizes the very high temperatures in the exhaust system of the motor home to actually burn up the waste materials. The operating temperatures that must be reached inside the exhaust system are anywhere from 900 to 1000°F. It is absolutely impossible for any bacteria, small waste particles, or odors to survive these temperatures.

The greatest advantage of this system is that it eliminates the need to frequently empty the holding tank. This is not to say that it completely does away with having to find a dumping station once in a while. The Thermasan does not interfere in any way with the manual method of evacuating the holding tank. Since the Thermasan will only operate at speeds above 30 or 40 mph, there will be times that the unit will not operate, such as in stop-and-go traffic and on country roads where you can't reach and maintain the necessary speed for a sufficient amount of time. You will not be able to evacuate your holding tank completely every time you have it turned on.

The Thermasan system is broken down into two basic sections, the plumbing circuit and the electrical circuits. Basically, the plumbing portions of the system are mounted between the holding tank and

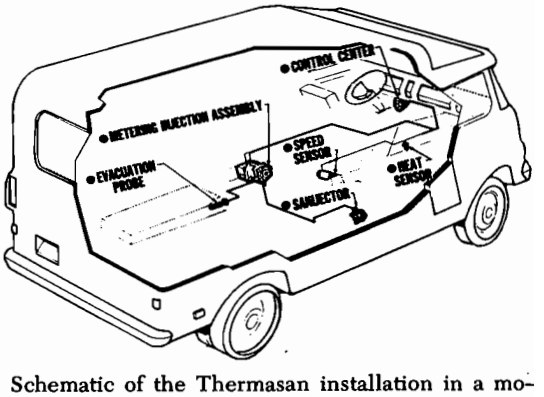

Schematic of the Thermasan installation in a motor home (© Thermasan Corp)

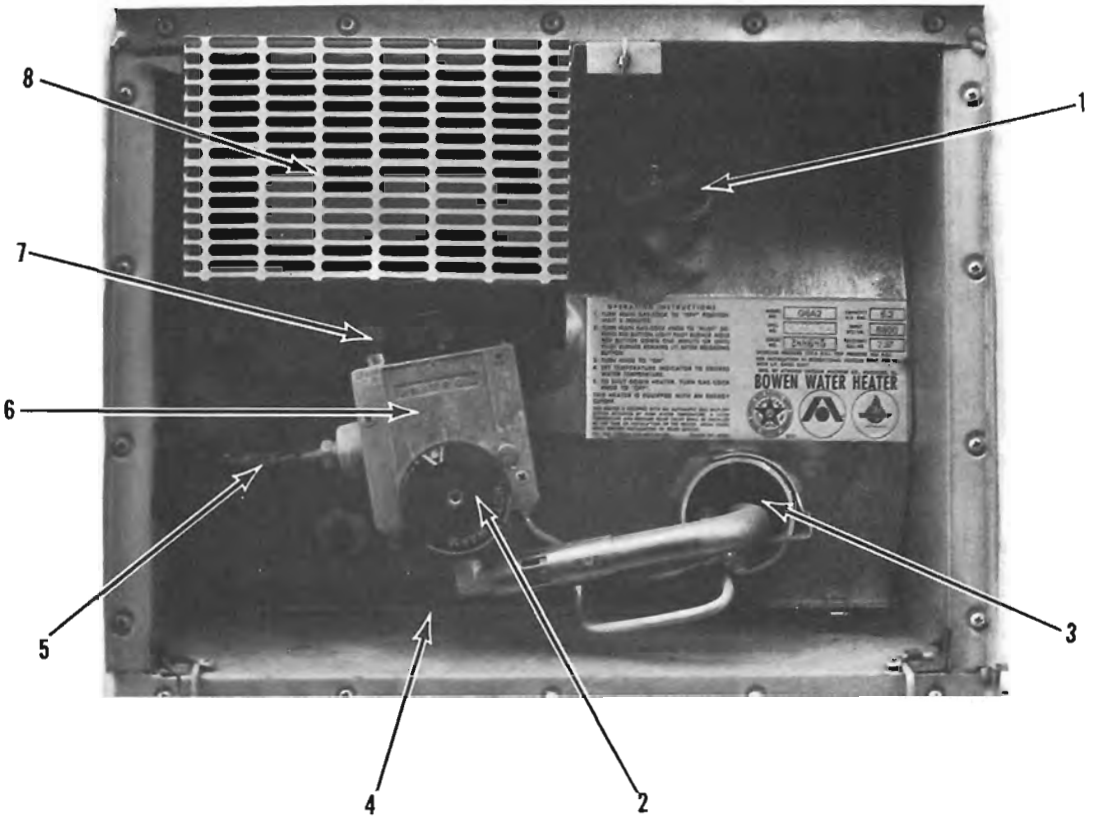

View of the hot water heater components as seen from outside the vehicle with the access panel removed

1. Water drain valve
2. Water temperature control
3. Gas burner
4. Thermocouple element
5. Gas supply line
6. Gas control valve
7. Pilot start button
8. Exhaust vent

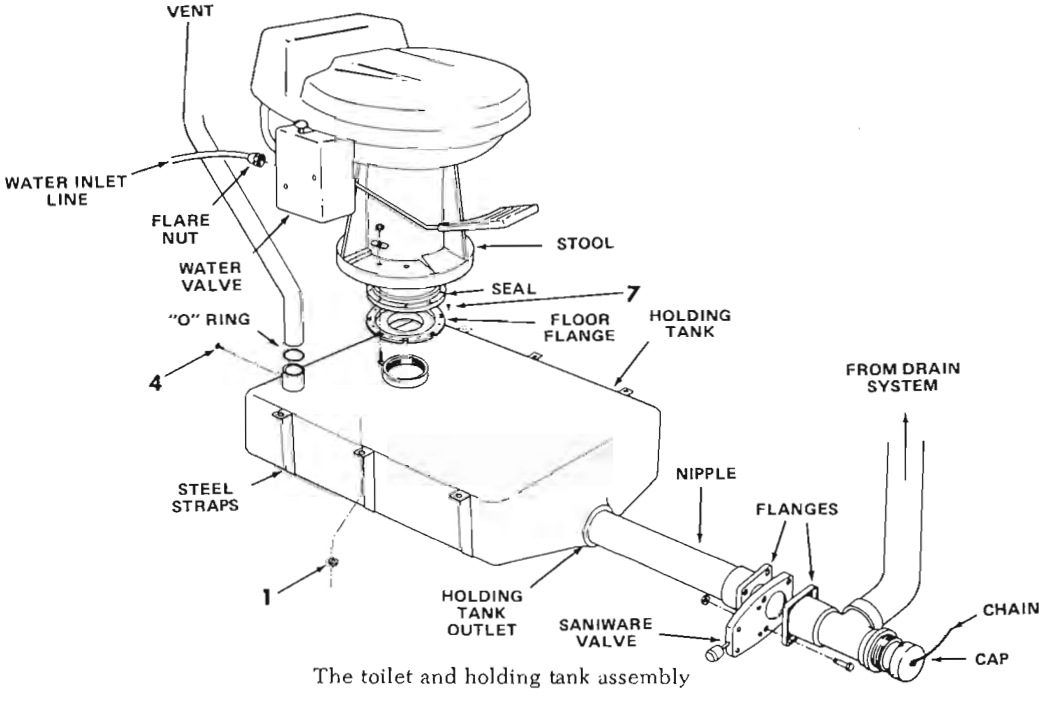

The toilet and holding tank assembly

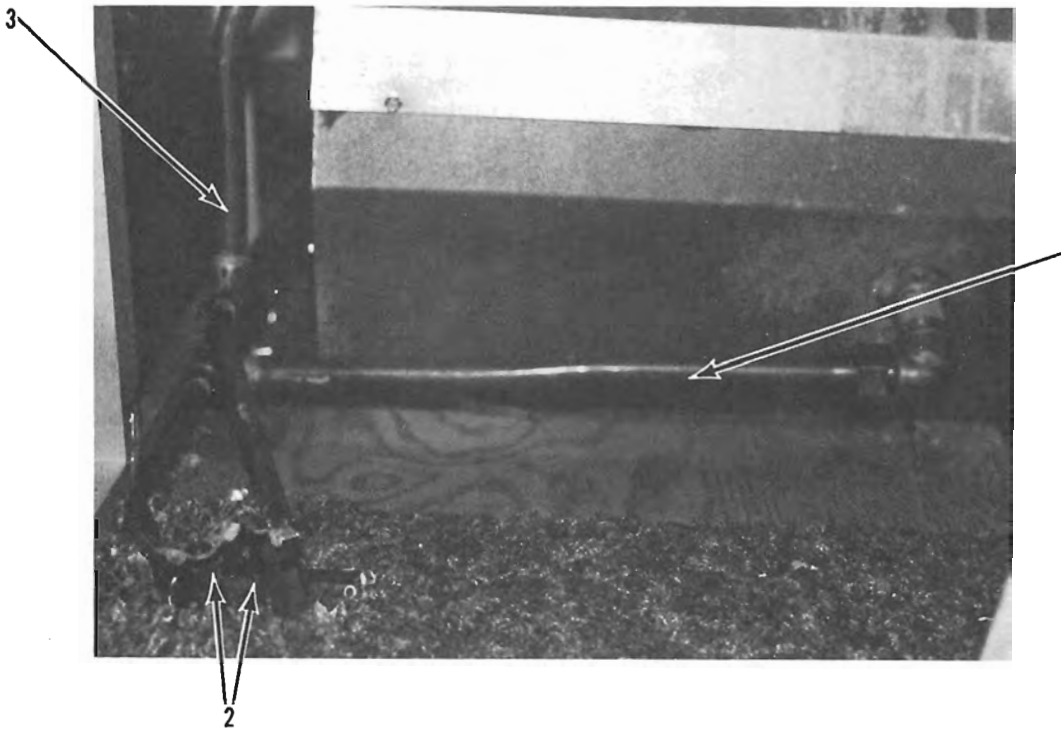

Drain petcocks for the hot water heater

1. Cold water supply line
2. Drain petcocks
3. Hot water supply line

the exhaust pipe and the electrical portions are mounted between the engine and the injection pump.

The components of the system are listed below. They are broken into the two divisions of plumbing and electrical components.

Plumbing

1. The evacuation probe in the holding tank(s).
2. The rubber tubing that runs from the holding tank(s) to the metering injection pump assembly, and from the metering injection pump to the sanijector.
3. A metering injection pump assembly which regulates the flow of waste material into the vehicle's exhaust system.
4. The sanijector, which is connected into the motor home's exhaust system. The sanijector's nozzle sprays the treated waste in the exhaust pipes.

Also included in the plumbing components are the chemicals that are placed in

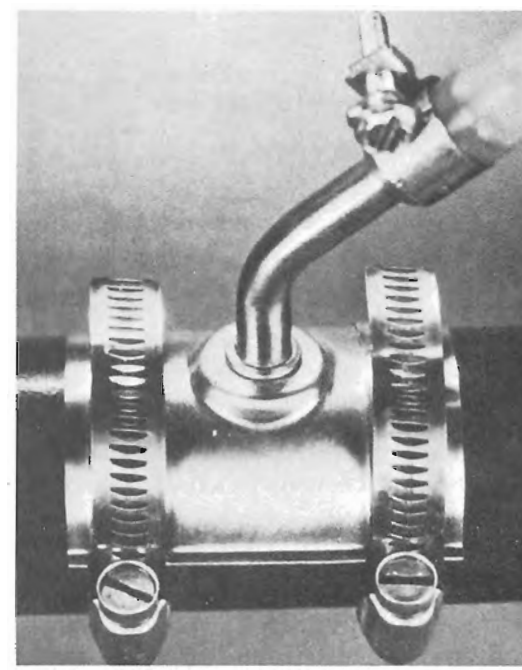

The Sanijector assembly (© Thermasan Corp)

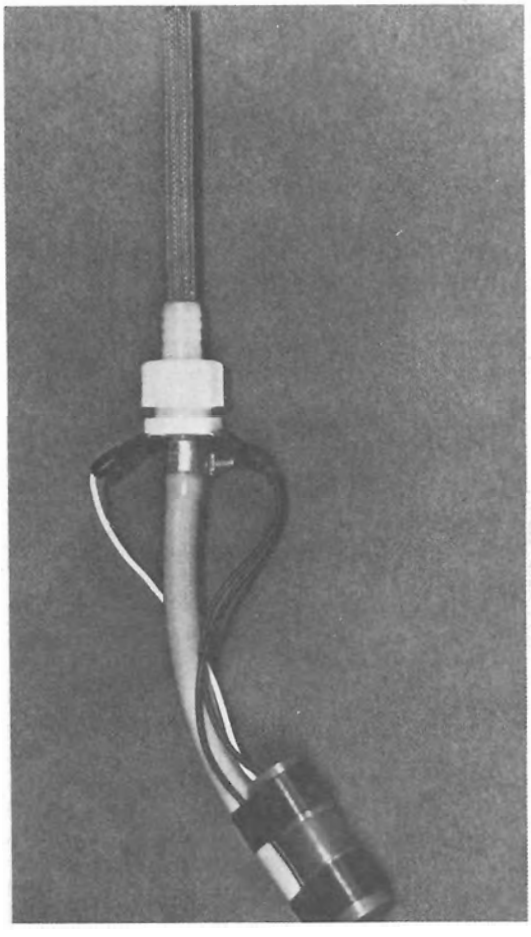

The evacuation probe with a level sensor module attached (© Thermasan Corp)

the holding tank to break down and deodorize the waste material.

ELECTRICAL

1. A level sensor which "tells" the system to stop operating when the holding tank is empty.
2. A speed sensor which "tells" the system when the motor home is going fast enough for the system to operate.
3. A heat sensor which "tells" the unit when the exhaust gases are hot enough to burn the treated wastes.
4. The control center which is mounted on the vehicle's dash. The control unit monitors the speed of the vehicle and the temperature of the exhaust gases. If either the speed or the temperature drops below certain levels, the Thermasan stops pumping the treated wastes into the exhaust system. There are 3 lights on the control center's face which tell the operator whether or not the Thermasan is on, if it is burning the treated wastes, and if the holding tank is empty and that the system should be turned off. The On/Off switch is also located on the control center's face.

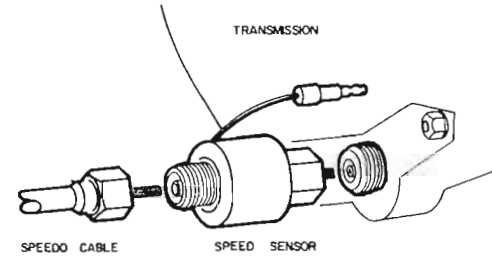

The speed sensor assembly (© Thermasan Corp)

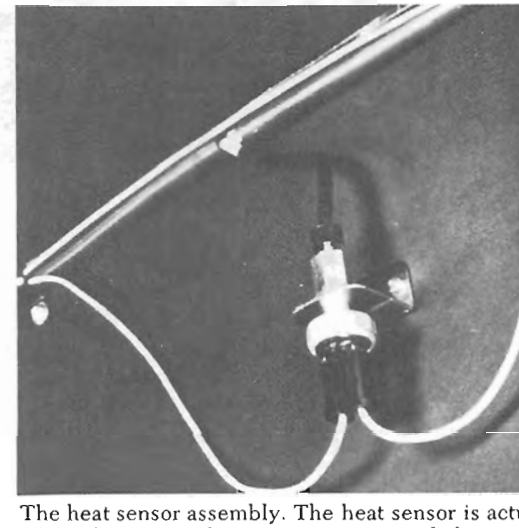

The heat sensor assembly. The heat sensor is actually nothing more than a vacuum-actuated electrical switch. There is an inverse relationship between engine manifold vacuum and heat in the exhaust system: more vacuum, less heat; less vacuum, more heat. (© Thermasan Corp)

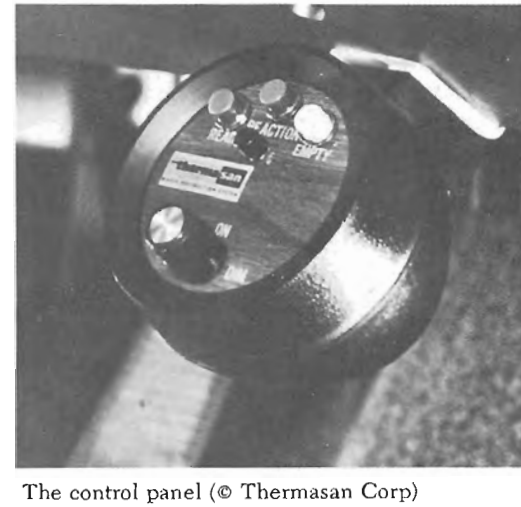

The control panel (© Thermasan Corp)

There are six types of Thermasan arrangements for motor homes: 3 variations of two basic systems. The two basic systems are the Model B and the Model BL. The BL system has two additional features not found on the B system—a holding tank sensor which signals the operator when to turn off the Thermasan and a press-to-test button to check when the metering injection pump is injecting wastes into the exhaust system. The 3 variations are as follows: Model 200—this system is used with holding tanks that collect toilet wastes only; Model 600—this system is used with holding tanks which collect sink, shower and basin waste water and toilet wastes; and the Model 2–500—this system is used in a vehicle which has two separate holding tanks, one for sink, shower and basin waste water and another holding tank for the toilet. The Thermasan system draws from both tanks simultaneously.

Following is an explanation of how all of the components work and what happens when you turn that little button on the control panel.

Let's assume that you have already put the chemical solvent in the holding tank before you started driving. Now you are out on the road starting to cruise at about 50 mph and are expecting to maintain that speed for some time.

Turn on the on/off switch on the control center and a red light will come on to tell you that the Thermasan is on. The heat sensor tells the control center whether or not the engine is hot enough for the waste to burn. If it is, then it closes an electrical circuit to the speed sensor. The speed sensor tells whether or not the motor home is traveling fast enough. If so, an electrical circuit is closed to the control center. When the circuit is closed, a green light comes on and the control center closes another electrical circuit to the metering injection assembly. The metering injection assembly then begins to drain the holding tank through the evacuation probe. The waste material flows toward the front of the vehicle and into the metering injection assembly. The flow is regulated and pumped through a tube and on to the sanijector. The treated waste is injected into the exhaust pipe and completely destroyed. All wastes, bacteria, and gaseous by-products are destroyed and rendered odorless and harmless. When the tank is almost empty, a white light comes on at the control center to let you know that you should soon turn off the system. This is done by the level sensor in the holding tank. When the tank is empty, the green light goes out letting you know that the pump has stopped and the unit is to be turned off.

If odors develop at the exhaust pipe outlet, don't immediately conclude that the system is malfunctioning. It may be a temporary lack of sufficient heat in the exhaust system. This can happen during a heavy rainstorm when water is splashing up on the exhaust pipes and cooling them enough to prevent the wastes from burning at a high enough temperature.

Troubleshooting Guide

The Thermasan troubleshooting guide is designed to give fast and easy solutions to service problems. To use the guide, simply select the particular symptoms observed and match them with the "Problem Index" below. The sequence of steps for locating the cause of the problem has been carefully designed to save time. Skipping steps will cost time and make finding an answer more difficult if not impossible. After replacing a part, recheck the system. Take a test drive to be sure that everything is operating properly.

PROBLEM INDEX

Problems Indicated by the Control Center

1. Neither ready nor reaction light glows when the system is turned on.
2. The ready light works but there is no reaction light.
3. The reaction light works but there is no ready light.
4. Both lights work but the unit does not seem to pump waste.
5. The reaction light stays on even when decelerating.
6. Both ready and reaction lights are flickering on and off.
7. The ready light flickers on and off.
8. The reaction light flickers on and off.
9. Both ready and reaction lights operate but do not pulse when the press-to-test button is pushed.

10. The empty light does not come on.
11. The empty light does not go off.

Odor Problems

12. Odors are noticeable inside the vehicle while driving.
13. Odors are noticeable outside the vehicle after operating the Thermasan.
14. Residual odors at the tailpipe.

PROBLEMS

1. Neither ready nor reaction light glows when system is turned on.

a. Inspect the connection at the battery for possible corrosion or loose connections. If the terminals are found to be corroded, clean them with a fine sandpaper and return the *red* lead to the positive (+) terminal and the *black* lead to the negative (−) terminal. Tighten all connections.

b. Remove and inspect the inline fuse on the red lead near the battery connection. If the fuse has "blown," this is symptomatic of a "short" in the electrical system; the entire harness and its connections should be inspected for possible frayed or burned wires or loose connections allowing a "short" to ground. *Do not replace* the 5 amp fuse until the harness has been inspected and *under no circumstances should a larger amp fuse be used.*

c. Check the connector between the harness and the control center module for proper connections. The male and female pins housed within the connector body should be straight and of equal height. They should be firmly attached to their respective wires. Compare the numbered holes at the rear of the connector and the color of the wire inserted in that hole with the appropriate diagram provided. When the inspection is completed, carefully mate the connector bodies and press firmly until the snap tabs are locked into place.

d. Test the switch and its connections for defects. Remove the setscrew from the side of the base on the control center module. Slide the control center off its base by exerting a firm forward pull. Remove the screw from the back of the control center and separate the housing from the bezel. Using a test lamp for locating shorts, check the switch. By reversing the steps above, reinstall the control center module.

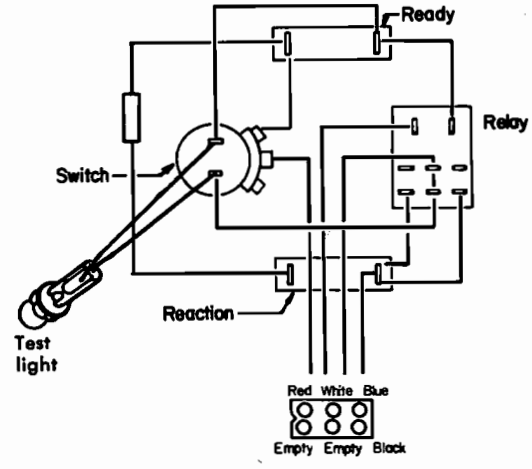

Checking the switch on the control center on Model B systems

2. The ready light works, but there is no reaction light after 35 mph.

a. Check the reaction light for a burned-out bulb and/or loose connections. Remove the setscrew from the side of the base on the control center module. Slide the control center off its base by exerting a firm forward pull. Remove the screw from the back of the

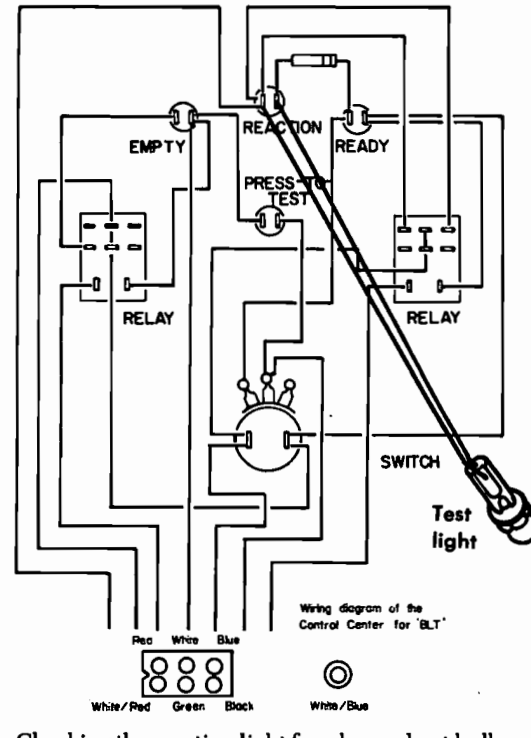

Checking the reaction light for a burned out bulb on Model BL systems

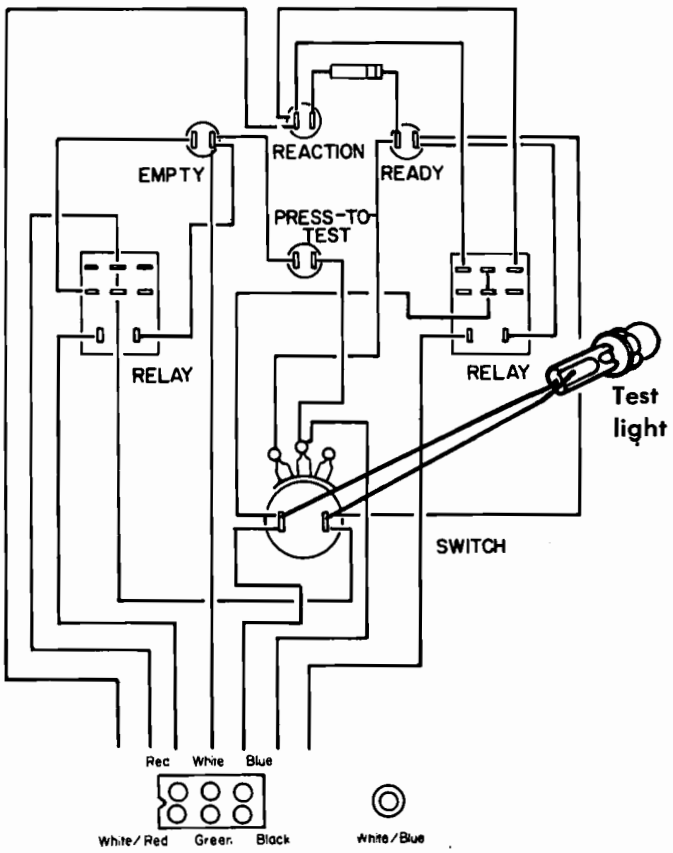

Checking the switch on the control center on Model BL systems

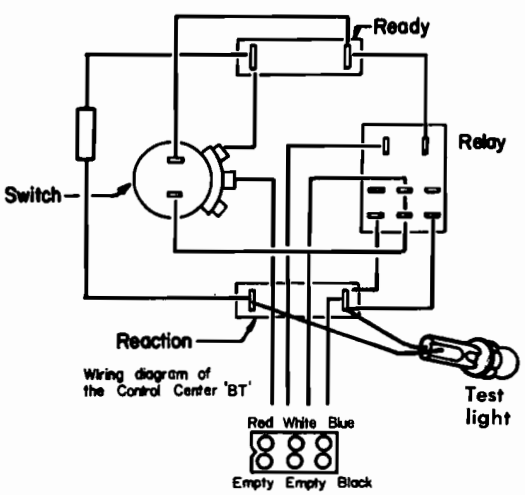

Checking the reaction light for a burned out bulb on Model B systems

control center and separate the housing from the bezel. Using a test lamp for locating shorts, test the reaction light for a burned-out bulb. Inspect connections and reinstall by reversing the above steps.

b. Inspect the connector between the harness and control center module for proper connections. The male and female pins housed within the connector body should be straight and of equal height. They should be firmly attached to their respective wires. Compare the numbered holes, at the rear of the connector, and the color of the wire inserted in that hose with the appropriate diagram provided. When the inspection is completed, carefully mate the connector bodies and press firmly

until the snap tabs are locked firmly into place.

c. Check the heat sensor leads for loose connections at the terminals.

d. Test for a possible faulty relay. Remove the blue lead traveling from the harness to the heat sensor. With the system turned on, ground the lead to any clean, unpainted part of the frame. If the ready light does not come on, the relay is faulty. Replace the control center module.

e. Test for a faulty heat sensor. With the system turned on, but the engine not running, ground the blue lead from the heat sensor to the speed sensor. If the system does not operate, the heat sensor is at fault. Remove the terminals and hose from the heat sensor. Remove the heat sensor from the vehicle by extracting the two screws in the bracket. Replace by reversing this procedure.

f. If, after testing for the above, the system does not operate at 35 mph, the problem lies with the speed sensor and it must be replaced. Remove the speedometer cable from the speed sensor and disconnect its electrical fitting. Unscrew the speed sensor and replace it with a new part by reversing this procedure.

3. The reaction light works, but there is no ready light.

a. Check the ready light for a burned-out bulb and/or loose connections. Remove the setscrew from the side of the base on the control center module. Slide the control center off its base by exerting a strong forward pull. Remove the screw from the back of the control center and separate the housing from the bezel. Using a test lamp for locating shorts, test the ready light for a burned-out bulb. Inspect the connections and reinstall by reversing the above steps.

4. Both lights work, but unit does not seem to pump waste.

a. The pump's motor leads may be disconnected. Remove the two pan head screws holding the terminal dust cover in place. Check the terminals and their leads for a faulty connection. Also inspect the connections in the plastic pin housing which plugs into the dust cover. Return it to position and replace the screws.

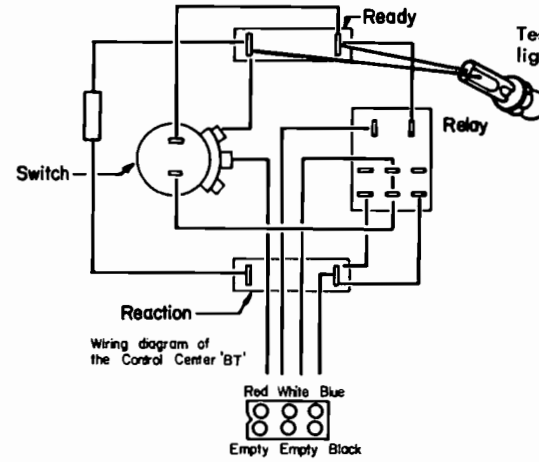

Checking the ready light for a burned out bulb on Model B systems

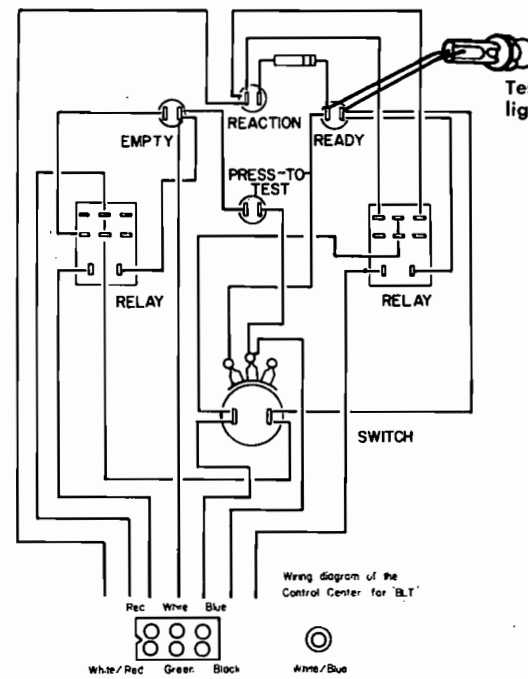

Checking the ready light for a burned out bulb on Model BL systems

b. Inspect all waste lines for possible kinks. Manually straighten any kinks and secure the hoses.

c. The waste lines or the hose menders within those lines may be plugged. Remove the blue wire from the harness side of the heat sensor and short that lead to the vehicle body. With the system turned on, watch the metering injection pump hoses for movement of waste. If waste does move, go directly to Step "e" for solu-

tions. If no waste is moving at this point, drain the contents of the holding tank. If the hose on the inlet side of the pump has collapsed, the plug should be found in the hose mender at the pump, the gray waste hose, or at the evacuation probe. (The evacuation probe plug is covered under Step "d.") Remove the gray hose at the hose mender near the pump. Operate the system again, as above. If the inlet hose to the pump collapses, the blockage is in the hose mender and can be cleaned with a steel rod. If the hose does not collapse with the gray line disconnected, the blockage is within the gray line or the evacuation probe. The gray line can be cleaned with compressed air or a steel rod. If, after cleaning the line and returning the hose to position, the pump still does not pump waste, the evacuation probe has become plugged. Continue to Step "d" for instructions.

NOTE: *In some rare instances, a blockage may occur in the hose mender on the outlet side of the pump causing a ballooning of that hose and a subsequent rupture of that line at the pump.*

In this case the hose within the pump must be replaced. Remove the two 5/16 in. nuts from the thumbscrews holding the front of the pump in place. Pull the front off the pump and remove the old hose from the rollers. Depress the springs on the hose menders and hold them in position. Slide the hose into position on the rollers and replace the front of the pump.

CAUTION: *Make sure that the two halves of the pump assembly are not pinching the hose.*

Replace the two thumbscrews, tightening the nuts until the lockwashers flatten. Do not overtighten. Insert the tabs on the springs into the holes in the pump. Reclamp the waste lines to the inlet and outlet hose menders.

REMINDER: *The pump shaft rotates counterclockwise. The gray waste line has to be attached to the inlet side.*

d. Remove the holding tank evacuation probe and inspect it for a possible clog. Remove the evacuation probe screen by unscrewing the plastic nut on the outside of the holding tank. If your system includes a level control, remove the terminals first and note the alignment of the terminal screws. After separating the nut, remove the rubber washer and draw out the screen. Flush the screen to remove the plug. Insert the screen and press the rubber washer back into place. Screw the nut back into its fitting. If your system has the level indicator, orient the two terminal screws as before and plug the terminal wires back into place.

NOTE: Either lead can be placed on the right or left terminals.

e. Inspect the clamps on the gray waste line. Loose clamps can allow air to be pumped through the system instead of waste. Tighten all clamps.

f. Press the evacuation probe more firmly into the rubber grommet. Here too, an air leak may occur and not allow the full potential to be drawn from the holding tank.

g. Inspect the hose to the sanijector for possible burning. The burning of this hose is usually accompanied by an odor problem and is caused by an air leak between the metering injection assembly and the sanijector. The hose must be replaced with the same high-temperature hose and the air leak prevented by tightening the clamps sufficiently.

CAUTION: *Do not substitute any other hose.*

h. Check the type of system in the vehicle. Type 200 systems are for use in vehicles where toilet wastes *only* are collected in the holding tank. Sink, shower, and basin water by-pass the holding tank.

Type 600 systems are for use where sink, shower, and basin water, and toilet waste are collected in the same tank. If a Type 600 is needed, remove the dust cover from the back of the metering injection assembly. Remove the jumper wire and install the terminals as shown in the diagram and refit the dust cover.

5. The reaction light stays on even when decelerating.

a. In this case the heat sensor is defective and should be replaced. To test for a faulty heat sensor, turn on the system with the engine not running and ground the blue lead from the heat sensor to the speed sensor. If the system does not operate, the heat sensor is at

fault and must be replaced. Remove the mounting bracket and heat sensor by removing the two screws from the bracket. Pull the hose from the hose barb fitting. Reinstall by reversing the above procedure.

6. Both the ready and reaction lights flicker on and off.

a. If the lights are flickering on and off at a constant rate, the problem stems from the press-to-test feature. Remove the setscrew from the side of the base on the control center module. Slide the control center off its base by exerting a firm forward pull. Remove the screw from the back of the control center housing and separate the housing from the bezel. Using a test lamp for locating shorts, check the press-to-test button. Inspect the leads for a broken solder joint. If the press-to-test is at fault, replace the control center module.

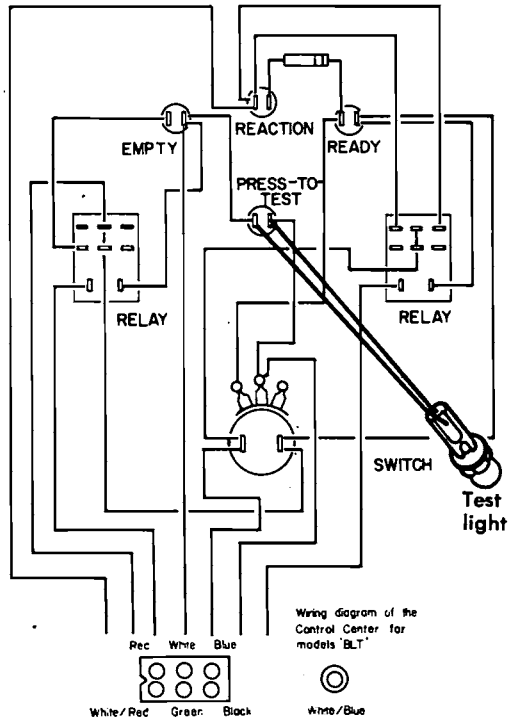

Checking the press-to-test button on Model BL systems

b. If the ground to the battery is not connected, the ready and reaction lights may flicker at a constant rate. Inspect the contact of the black wire at the battery. Clean the terminal and tighten in place.

c. If the lights flicker intermittently, the red line from the battery or fuse block should be checked over its entire length. In addition, inspect the connection at the plastic connector near the control center and the connections at the on/off switch in the control center. Begin by inspecting the red lead for possible frayed spots or bare areas. Inspect the six-pin plastic connector for bent pins or loose connections at the pins. Remove the control center module by removing the setscrew from the side of the base. Slide the control center off the base by exerting a strong forward pull. Remove the screw from the back of the control center housing and separate it from the bezel. Inspect the switch for broken solder joints. Replace by reversing the above instructions. If the problem still exists, a new control center must be installed.

7. The green light flickers on and off.

a. A lead is loose at the light, on/off switch, or at the battery or fuse block. Begin the inspection at the battery or fuse block. Make sure that all connections are secure and not corroded.

b. To check the switch and the light, remove the setscrew in the base of the control center module. Slide the control center from the base by exerting a strong forward pull. Remove the screw from the back of the control center housing and separate it from the bezel. Check the switch for broken solder joints. Inspect the terminals at the light for loose contacts and reassemble the module by reversing the above procedure. If the problem still exists, a new control center must be installed.

8. The reaction light flickers on and off.

a. If the flicker is constant, then the speed sensor is faulty and must be replaced. Using an adjustable wrench, remove the speedometer cable from the speed switch. Disconnect the electrical supply to the speed sensor. Using the adjustable wrench, remove the speed sensor from the transmission. Reinstall the replacement part by reversing the above procedure.

CAUTION: *When tightening the speed sensor to the transmission, one quarter turn past finger-tightness is sufficient. Do not overtighten.*

b. If the flicker is intermittent, a loose connection is at fault. Beginning at the connection with the battery or fuse block, inspect all terminals and connections. Inspect the blue wire to the heat sensor and speed sensor for a possible short or incomplete connection. Disconnect the six-pin plastic connector near the control center module and inspect the pins to be certain that they are seated properly and making a good connection. Carefully mate the connector bodies again and press firmly together until the snap fitting lock is heard to connect. If the problem still exists, a new control center must be installed.

9. Both the ready and reaction light operate but do not pulse when the press-to-test button is pushed.

a. Check the one-pin connector near the control center module. Inspect the pin and socket for a loose connection. Mate the plastic housings until the snap connector is heard.

b. Inspect the connection of the blue/white wire at the pump. Remove the two screws from the terminal duct cover on the motor. Check the blue/white wire for a broken solder joint or poor connection with its terminal. Replace the terminal cover and screws.

c. Remove the control center and inspect the press-to-test switch for broken solder joints. Remove the setscrew from the side of the base of the control center assembly. Exert a strong forward pull on the housing to separate it from the base. Remove the screw from the back of the housing to separate the bezel from the housing. Inspect the press-to-test switch for broken leads. Using a test lamp for locating shorts, test for a faulty press-to-test switch. If the switch is faulty, replace the control center assembly.

10. The empty light does not come on.

NOTE: *This may simply indicate that the holding tank level is not low enough to trigger the light. If the holding tank has been dumped and the light does not come on, begin your investigation at the evacuation probe.*

a. Visually inspect the clamp holding the hose on the evacuation probe. Make sure that the clamp is not in contact with the two screws or terminals on the evacuation probe. Move the clamp enough to clear the terminals and retighten it.

b. Inspect the evacuation probe for a possible faulty installation. The screw heads should be 45° to the pavement with the yellow wire at the top. If a faulty installation is discovered, simply turn the evacuation probe, by hand, to the proper position, making certain that the probe is still firmly planted in its rubber grommet.

c. Inspect the yellow lead from the evacuation probe to the level control module for a possible short to ground.

Remove the yellow lead from the terminal. The empty light should come on. If it doesn't, the level control module must be replaced.

d. Drain the holding tank. Separate the nut from its mating part on the evacuation probe with an adjustable wrench. Inspect the two screws inside

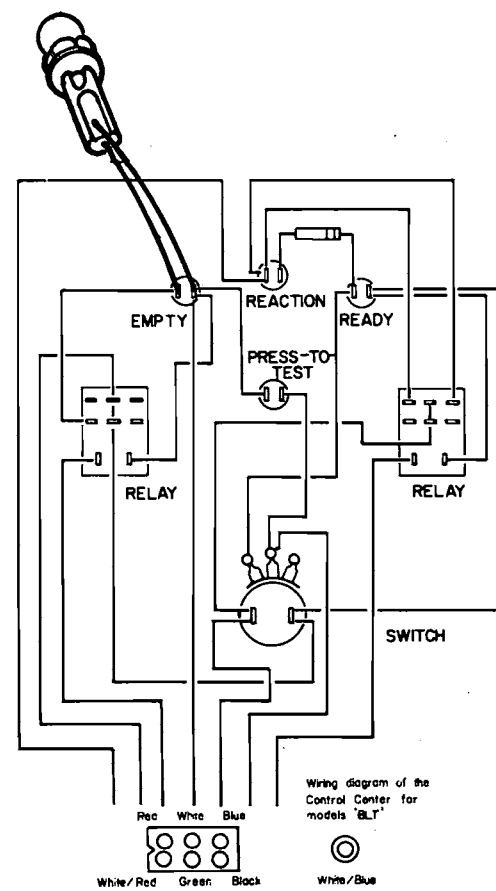

Checking the empty light for a burned out bulb on Model BL systems

the probe fitting for anything that might be touching them both. Reassemble and return to its proper installation orientation. See Step "b" above.

e. Inspect the control center module for a loose connection at the light or a burned-out bulb. Remove the setscrew from the side of the base of the control center module. Pull the control center off the base with a firm forward pressure. Separate the housing from the bezel by removing the screw at the back of the housing. Using a test lamp for locating shorts, check the light for a burned-out bulb. Inspect the terminals for a good connection.

f. If after checking all of the above, you cannot get an empty light, the switch or relay must be at fault and a new control center must be installed.

11. The empty light does not go off.

a. This is the normal operating condition of the system when the level of the holding tank is below the probe. This simply indicates to you that no more waste is available for pumping and your system should be turned off. Your tank is never pumped dry. If the light is on and visual inspection of the tank indicates it is full, then: (a) Inspect the black and yellow connections to the evacuation probe. (b) Test for a possible defective level indicator module. Remove the yellow lead to the evacuation probe. Insert a terminal or wire and touch it to the screw head of the black wire. If the light remains on, replace the level indicator module.

12. Odors are noticeable inside the coach while driving.

a. Investigate for dry traps in sink or bathroom. Use Aqua-Kem ® or another suitable chemical odor control as instructed. This does not indicate a malfunction of your Thermasan.

13. Odors are noticeable outside the vehicle after operating the Thermasan.

a. Visually inspect the exhaust pipe at the point of waste injection for waste dripping on the exhaust pipe. If the leak is at the hose and sanijector junction, reclamp the hose at that point. If the leak is at the sanijector, remove the sanijector by loosening the two large clamps. Replace the asbestos gaskets and reclamp in place.

14. Residual odors at the tailpipe.

a. Inspect the metering injection assembly for your model number. Type 600 systems are for use where sink, shower, wash water, as well as toilet wastes are all collected in a single holding tank. Type 200 systems are for units where toilet waste only is collected in the holding tank. If the wrong metering injection assembly has been installed, remove the dust cover from the back of the motor by removing the two screws that hold it in position. Place terminal receptacles on the desired terminals and replace dust cover.

b. If the proper metering injection assembly has been installed, use Aqua-San for exhaust emission odor control.

HOLDING TANK

Removal and Installation

1. Drain the holding tank completely.

2. Remove the toilet assembly from the top of the tank, including the seal and the floor flange.

3. Remove the setscrew at the base of the vent.

4. Remove the bolts and nuts retaining the Saniware valve and remove the valve assembly.

5. Remove the nuts securing the holding tank retaining straps and lower the holding tank from under the vehicle.

If the unit is equipped with a Wemac sending unit, the unit may be removed after the tank has been lowered. Be careful not to put any strain on the electrical connections to the sending unit.

6. If a new holding tank is being installed, a new tank nipple must be installed at the holding tank outlet. Cut the new nipple to the required length. Install the nipple on the holding tank using black plumber's glue.

NOTE: *Make sure that the bolt holes in the flange on the nipple line up with the bolt holes in the flange on the outlet line when the holding tank is in place.*

7. Install the Wemac sending unit (if so equipped).

8. Raise the holding tank in place. The vent must be glued in place while raising the tank.

9. Attach the holding tank to the

motor home with the steel attaching straps and nuts. Tighten the nuts securely.

10. Install the Saniware valve between the holding tank and the outlet line.

11. Replace the setscrew at the base of the vent and tighten it.

12. Install the floor flange and secure it with the proper screws.

13. Install the seal, and replace the toilet.

11 · Heating

LPG (Liquefied Petroleum Gas) System

TYPES OF FUEL USED

Butane and propane are the two basic fuels for all motor homes. They produce a clean, even flame which is ideal for cooking and heating the trailer.

Both gases can be stored in a closed container and converted by pressure changes from liquid to gas, which is a valuable asset. The gas remains at the top of the container while the liquid gas is on the bottom. As the gas at the top is used, the reduction in pressure inside the cylinder causes the liquid in the bottom to vaporize, converting it to gas. The container is empty when all the liquid gas has vaporized and all the upper gas has been used.

It has been proven that, per gallon of fuel, butane produces more BTUs (British Thermal Units) of heat than propane. However butane has a higher "boiling" point than propane. This means that the vaporization quality by which it turns from a liquid to a gas is stopped at 32°F and it remains a liquid.

Butane cannot, consequently, be used in an area where the temperature is below 32°F. Propane, since it does have a lower boiling point and a lower vaporization temperature (−44°F), is sometimes mixed with butane to lower the overall boiling point. Propane can also be used alone—especially where the climate is extremely cold.

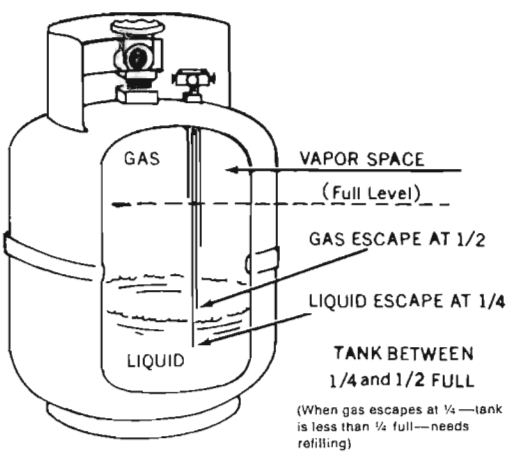

A cutaway view of the inside of a LPG gas bottle

The size of the bottled-gas tank and the degree of vehicle heating which is done with the gas will regulate the life of the gas tank.

On some units it is possible to fit the tank with a gauge which will make it possible to tell exactly how much gas the cylinder contains. The weight of the tank compared to a full cylinder is the easiest,

The LPG tank compartment on later model Winnebagos

commonest way of measuring the contents. It is also possible to tell by making a note of the condensation marks on the outside of the container which will mark the upper level of the gas.

LPG TANK

The LPG tank(s) is located in a sealed compartment in the side of the motor home to which access is gained from the outside. The gas compartment contains the gas tank, the high pressure gas supply line, the regulator assembly, and a low pressure gas supply line leading to a bulkhead adapter assembly.

Removal and Installation

1. Open the gas compartment door to gain access to the gas tank(s).
2. Remove the high pressure gas supply lines from the tanks.

NOTE: *The fittings on the tank ends of the high pressure gas supply lines have left-hand threads.*

3. Unsnap the holding straps on the tanks and remove the tanks from the gas compartment. On newer models, remove the two retaining screws from the top protecting flanges and then remove the tank.
4. Install the gas tanks in the reverse order of removal.

REGULATOR

The regulator on the bottled gas containers is an important addition to the fuel system. The valve governs the amount of pressure which the gas appliances receive from the bottled gas container. Bottled gas appliances are under very high pressure. Gas appliances cannot operate with this amount of pressure, thus the need for a regulator to reduce pressure. Once the regulator is adjusted at the factory, it should not be touched again. If the regulator is found to be faulty, a new unit should be installed and adjusted by a qualified person.

The regulator can be removed as follows:

1. Open the gas compartment door and turn off the gas supply from both gas tanks.
2. Remove both gas supply lines from the regulator assembly.
3. Release the holding strap from the left-side tank and remove the tank.

4. Remove the low pressure hose from the regulator assembly.

5. Remove the regulator attaching nuts and remove the regulator assembly from the vehicle.

6. Install the regulator assembly in the reverse order of removal.

Testing for Leaks in the LPG System

If there is evidence of a leak (sound or smell), testing procedures should begin immediately since this is a very dangerous situation. The probability of fire or explosion is great. In fact, frequent checks of the connections, fittings, and outlet valves should be made to lessen the possibility of a leak.

Since LP gas is clear and odorless after it is refined, Federal law requires that it be combined with a substance called Mercaptan which has a distinctive odor. If there is any type of leak in the gas system of the trailer, the smell of the Mercaptan should be evident and the degree of the odor will give evidence as to the seriousness of the leak. If there is a great amount of odor, the gas should be turned off at the tanks, all windows and doors of the trailer should be opened, and the trailer should be evacuated until the smell subsides. Mix a concentrated soap and water solution. This will be the leak finder. NEVER USE A MATCH OR FLAME TO FIND GAS LEAKS. Once it is safe to enter the trailer, coat the fittings suspected of leaking with the solution, have an assistant turn on the gas, and watch for air bubbles at the fitting. Use this procedure at all the fittings suspected of leaking.

The average gas line is ¾ in. tubing with flared fitting endings. Usually the problem lies with fittings which have become loose because of road vibration. Tightening the fitting should cure the leak. Do not overtighten the fitting; the flared end could be damaged beyond repair. All that is necessary is a snug fit. NEVER use any type of sealing compound on a flared fitting as this will only clog the line and distort the seating surface of the connector.

The procedure listed above, through the use of the soap solution, is the best means of locating leaks, but it is not necessary to close off the gas entirely at the tank for small leaks. Finding the leak is easier if there can be some gas in the line.

If the lines are secure and not bent, but you still can't find the leak after testing

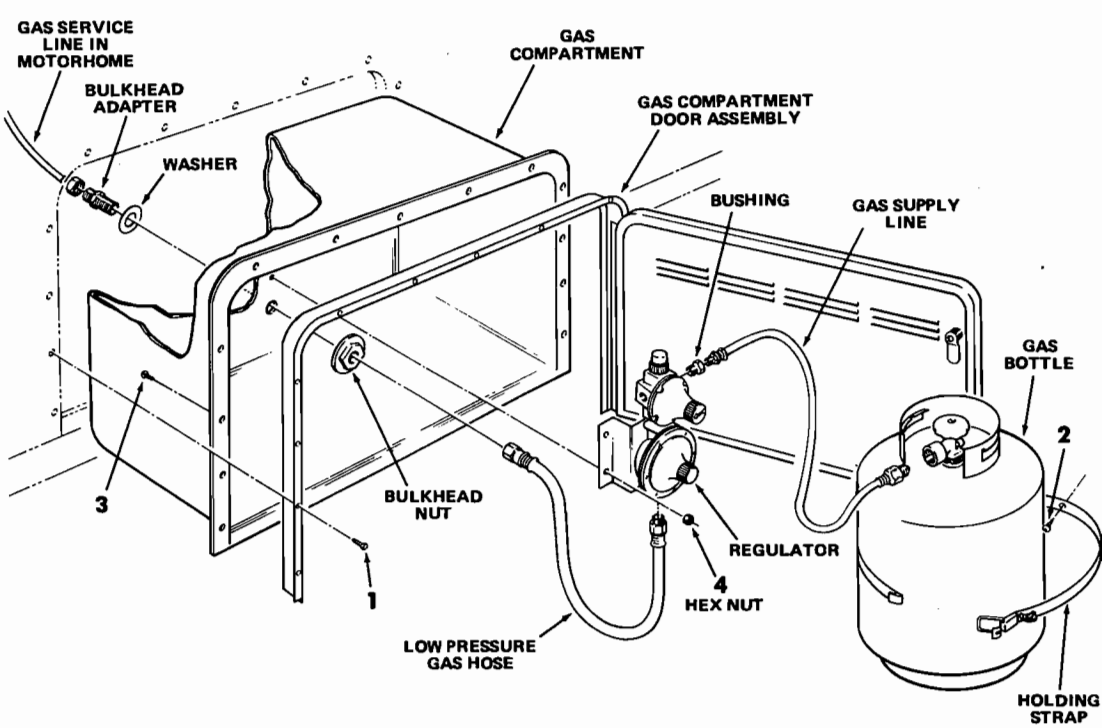

The gas compartment

all the connections along the gas line, turn off the gas, take the unit to a service center, and let trained servicemen locate the leak.

Heater

OPERATION

The procedure by which the heater produces heat varies only slightly from model to model. The basic operation of a gas-operated heater is such that the air which is to be combined with the gas is drawn from the outside of the motor home into the sealed burner chamber. The air is then combined with the gas at the venturi port where combustion takes place. The heat products of combustion from the main and pilot burners is vented to the outside through the combustion vent. The sealed combustion system does not allow any of the products of combustion to enter the living area.

To be effective, the heat produced by combustion must be distributed throughout the motor home by the air circulation system. An internal fan moves cooler air from the interior of the motor home across the surfaces of the heat exchanger which warms the air. This air is then channeled out of the heater, through ducts and into the living area. There is usually a filtering device at the air intake to remove dust and dirt particles.

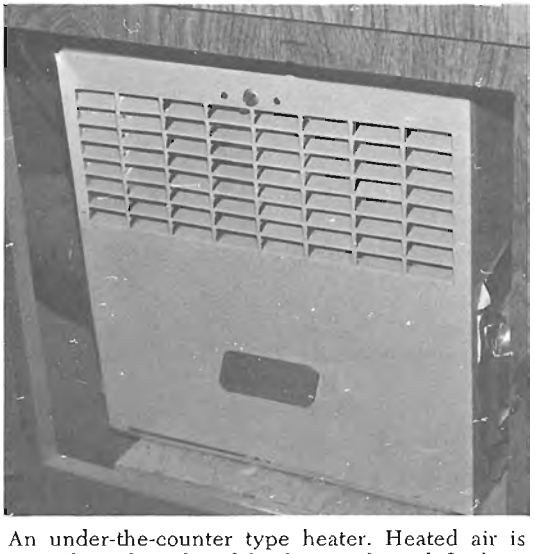

An under-the-counter type heater. Heated air is vented out the sides of this heater, through fresh air hose to the front and rear of the unit and exiting through vents mounted near the floor (Coleman 4000 Series)

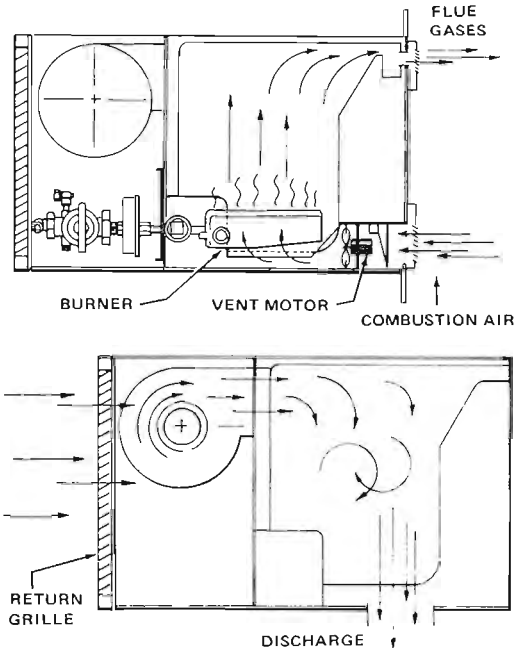

A cutaway view of a heater showing the flow of air through the unit (Coleman 8600 and 9200 Series)

THE PILOT

The pilot light (flame) is used to light the main gas jet flame, which produces the heat for the living area. The pilot light remains lit during the entire time the heater is in operation.

The pilot assembly consists of the pilot burner, thermal bulb (for pilot flame detection), and the ignitor coil. The assembly is located near the main burner assembly so that when gas starts to exit the main burner assembly it will come in contact with the pilot flame and ignite.

When the "RED" button on the gas control valve is pressed, the switch in the gas control valve is closed, permitting electric current to flow to the "glow coil" located just above the pilot burner. At the same time the safety shutoff valve in the gas control valve is held open. If gas is available the pilot will light. When the pilot flame appears, it is necessary to hold the "RED" button for at least another minute. This heats up the thermal bulb, which contains mercury. The mercury expands against a diaphragm in the gas control valve, which in turn pushes a rod

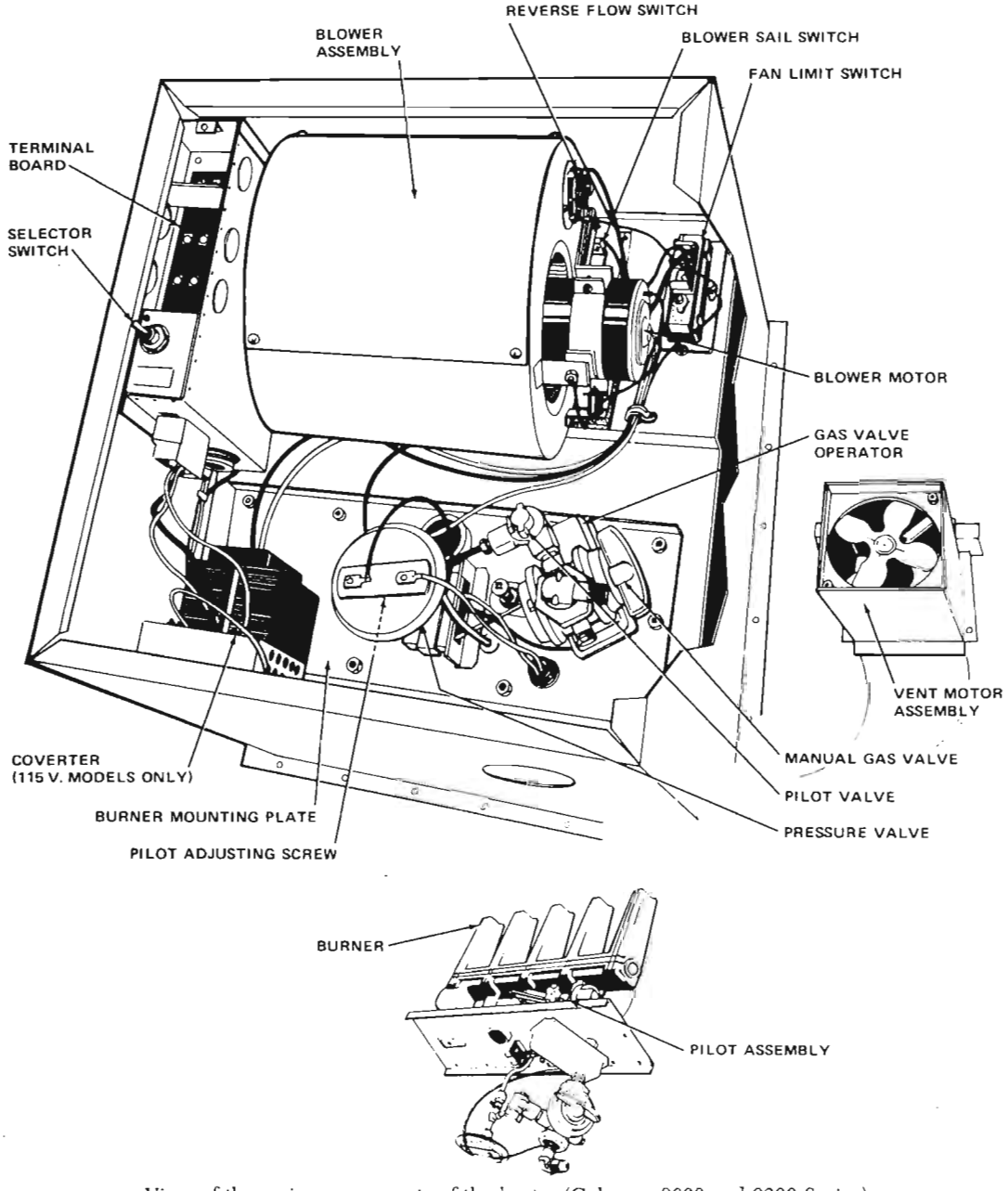

View of the major components of the heater (Coleman 8600 and 9200 Series)

or plunger out. When the "RED" button is released the plunger catches the safety valve of the gas control valve and holds the valve open. This allows gas to flow through the valve as long as the pilot is burning. If the pilot flame is extinguished for any reason, the mercury pressure on the diaphragm is reduced. The plunger on the diaphragm is pulled away from the safety shutoff valve allowing it to close, cutting off the flow of gas to the main burner and pilot.

Adjustment

The pilot flame should burn steadily, soft, and blue, with a slight yellow tip.

To adjust the pilot, remove the capscrew from the center of the shutoff valve. Rotate the underlying adjustment

screw counterclockwise for more flame or clockwise for less flame.

THE MAIN BURNER AND GAS CONTROL VALVE

The main burner gas control valve is a solenoid-operated valve. When the thermostat calls for heat, the gas valve opens permitting gas to flow to the main burner.

The gas pressure is checked at the ⅛ in. pipe plug at the right-side of the gas valve. Remove the plug and connect a manometer. The gas pressure should be 11 in. of water column on LPG with all appliances turned ON in the vehicle.

Adjust the main burner flame, at the primary air adjustment screw located on the burner plate to the left of the gas valve. Loosen the wing nut and turn the screw in or out as necessary. The main burner should be blue with slight yellow tips.

The burner is cast iron and is of the sawed-slot type.

THE BLOWER ASSEMBLIES

Except for the "top vent" type furnaces, there are two blower assemblies in the heater. One blower to draw in combustion air from the outside and force exhaust gases out, and another blower to circulate the inside air over the heat exchanger. Top vent furnaces use the natural process of hot air rising to circulate

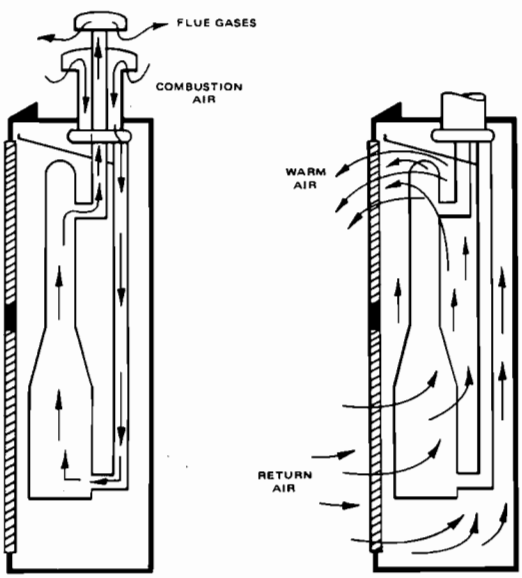

The flow of air through a top vent type heater

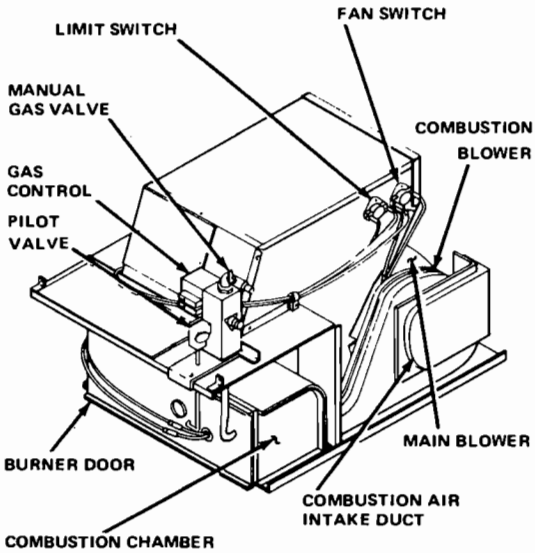

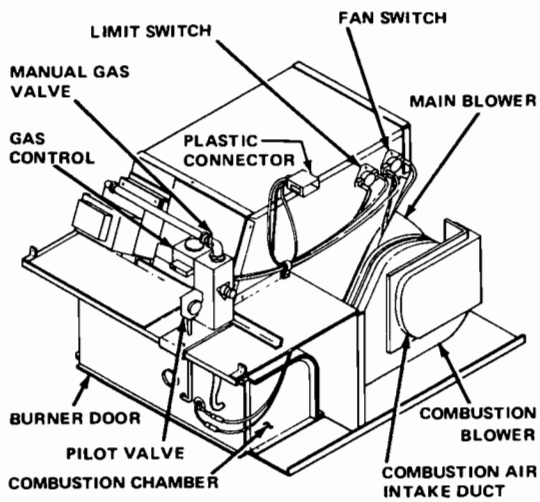

View of the major components of the under-the-counter type heater (Coleman 4000 Series)

the interior air and the natural force of the exhaust gases rising out the top roof-mounted vent to draw combustion air in to the burner.

As mentioned previously, the combustion air/exhaust chamber and the living area air within the heater are separated from each other. There is no mixture of the burner gases with air in the living area of the motor home.

When the thermostat indicates that heat is needed, the blower motors are engaged immediately. As the blower motors start, the microswitch in the gas

control valve is tripped and gas is allowed to flow to the main burner where it is lit by the pilot. When the thermostat indicates that the interior has been heated sufficiently, the microswitch is tripped in the gas control valve and the flow of gas is stopped, extinguishing the main burner flame. The interior air blower will continue to operate until all the residual heat in the heat exchanger is removed and the fan switch is cooled sufficiently to open its contacts and shut off the blower.

HEATER MAINTENANCE

If the burner is adjusted properly, there should generally be no need for maintenance to the heater assembly. A deposit of soot, however, frequently forms on the inside of the combustion chamber and it must be removed or it will cause blockage.

The best means of cleaning the combustion chamber is to lay either wet pieces of cloth or paper towels below the chamber to catch the soot as it falls. Use a soft brush or cloth to wipe the chamber clean. Some manufacturers recommend the use of a vacuum cleaner to suck the soot out but this may ruin the internal components of the vacuum. Make some provision for catching the soot or else a coating of soot will fill the trailer.

Heater Troubleshooting Chart

Symptom	*Remedy*
1. No heat	1. Check to see if there is gas in the cylinder and also make certain that the supply valve is in the "on" position. 2. Check to see that the pilot has not been blown out. 3. Examine the electrical connections to the blower for a short or loose connections. 4. Inspect the microswitch to see if it is functioning correctly. Clean all dirt deposits from the actuator pin. 5. Examine the blower for a burned-out motor.
2. Pilot will not stay lit	1. Check the thermocouple and replace it as necessary. 2. Check for air leakage into the combustion chamber. 3. Examine the pilot for lack of air (flame will be excessively high). 4. Check the gas supply and the pilot valve. 5. Examine the vent assembly filter for clogging.
3. Excessive motor noise	1. If a screeching or howling is present, the air/gas mixture is too lean. (See "Pilot Adjustment.") 2. Check for blower motor imbalance or a motor hum. In either case, the motor must be replaced or serviced.
4. Insufficient heat	1. Check the heat transfer coils to see if they are clean. If not, clean them as recommended in the text. 2. The blower motor is not turning fast enough to circulate the heat efficiently. Check for a voltage shortage or a defective motor. 3. The flame is not burning at its most efficient temperature and should be adjusted as recommended in the text. 4. The gas bottle is low on fuel.

12 · Refrigeration and Air Conditioning

Refrigeration

THEORY OF OPERATION

All the refrigerators used in Winnebago motor homes are absorption type. They are operated either by a gas burner or electric heating elements.

The absorption type refrigerator uses gravity to circulate the refrigerant within the refrigerating mechanism; thus, eliminating the need for any compressors, expansion valves, or capillary tubes. Because of the fact that the absorption type refrigerator uses gravity to operate, it is most important that the unit be level to within 1° when operating. If the unit is not level, the refrigerant will puddle within the various bends and loops in the pipes the refrigerant flows in, thus stopping the refrigeration cycle.

The refrigerant mixture in an absorption type refrigerator consists mainly of ammonia, with water and hydrogen playing catalytic roles in the refrigeration process. (Sodium chromate is also found in the sealed refrigeration system to retard corrosion).

A mixture of ammonia and water is boiled in the boiler by the application of heat from either a gas flame or an electric heating element. The ammonia and water vapor rise up through a rectifier and into the condenser. At this point the ammonia condenses into a liquid and the water is separated from the mixture. The water then flows to the absorber chamber, through a part of the condenser, which will be discussed later.

The condensed ammonia flows from the condenser and on to the evaporator where hydrogen is introduced. Hydrogen combined with liquid ammonia causes

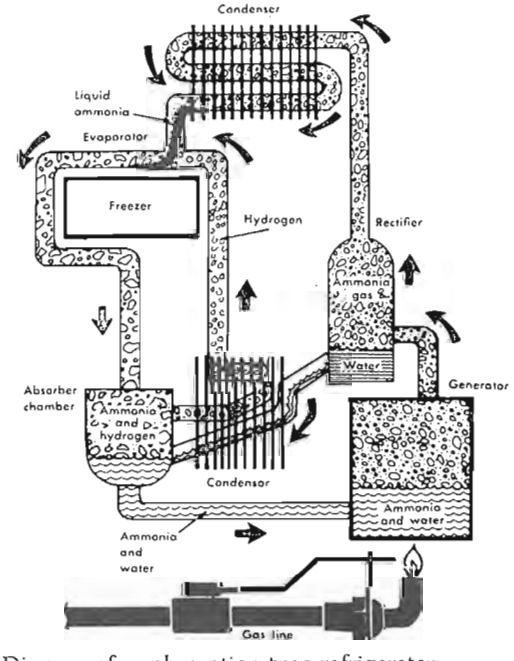

Diagram of an absorption type refrigerator

the boiling point of the liquid ammonia to be lowered. Thus, in the evaporator, the liquid ammonia boils and evaporates into a gas. This evaporation of the ammonia abosrbs heat, which is the actual cooling process. The evaporator coils are usually located around the freezer section of the refrigerator.

The evaporated ammonia (gaseous state) and hydrogen mixture then flow down to the absorber chamber where the water is waiting. Water has a very strong affinity for ammonia vapor. The ammonia is drawn into water, leaving the hydrogen separated from the ammonia. Water will not absorb the hydrogen. The hydrogen, separated from the ammonia, rises and returns to the evaporator. The ammonia and water mixture returns to the boiler to begin the cycle over again.

Although the refrigerant mixture is pressurized to about 200 psi, the forces involved to circulate the mixture within the system is only the variance of the specific gravity of hydrogen and hydrogen mixed with ammonia; not a whole lot of force. Thus, it is easy to see why the refrigerator will not function if it is not level and puddles of refrigerant form within the tubing.

When the ammonia and water vapor separate in the rectifier, the water passes through a part of the condenser on its way to the absorber, cooling, so that it will more readily absorb the ammonia when it arrives at the absorber. The hydrogen, when it is released from the ammonia, also passes through the condenser to reach the same temperature as the liquid ammonia and readily combine with it.

The most frequent trouble with gas refrigerators is the pilot light blowing out. Since the system has a thermocouple, the entire gas supply to the refrigerator is turned off when the pilot goes out. When the pilot fails to supply sufficient heat to

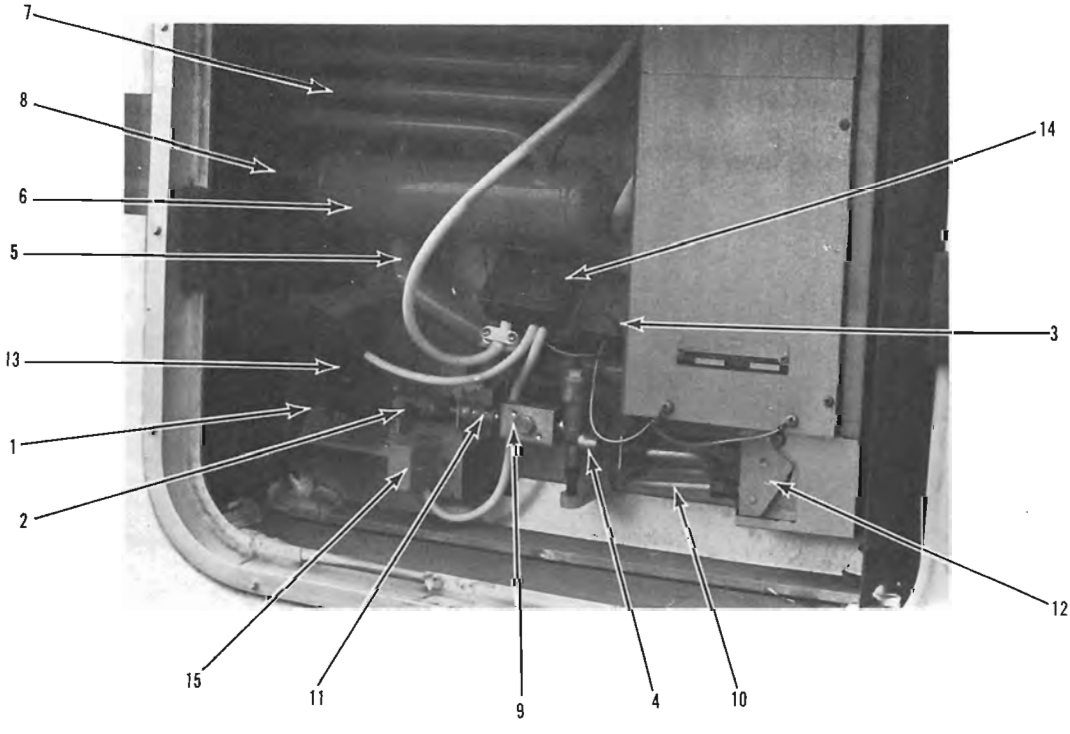

View of the rear of the absorption type refrigerator as seen from the outside of the motor home

1. Gas supply line
2. Gas shutoff valve
3. Thermocouple element
4. Gas safety shutoff valve
5. Heat exchange tube leading to boiler
6. Absorber vessel
7. Absorber
8. Filler cap
9. Gas thermostat
10. Gas inlet pipe
11. Gas filter
12. Burner draft and access door
13. Electric thermostat
14. Junction box
15. Junction box for the electric heater

the thermocouple, it closes a valve by means of a thermo-element which expands and contracts with the application of heat and a magnetic safety valve. If this happens, try to light the pilot again by pushing down on the button (usually red) and lighting the pilot flame with a match. Keep the button depressed for about a minute, allowing the thermocouple sufficient time to heat up and open the gas valve. The pilot should remain lit when the button is released. If it does not, the thermocouple is defective and should either be replaced or repaired. Before replacing the thermocouple, check to see if the heat sensor is in the proper position. It should be right in the middle of the flame. If it is not, adjust it so that the end of the sensor is positioned in the center of the flame.

The flame should be blue with a yellow tip. If it is all yellow and is giving off soot and an odor, the flame is not burning properly and needs an adjustment.

Check to see if you have the right type of burner tip. Some tips are designed for burning butane and you might be burning propane. Adjust the air flow valves and check the tip of the burner for cleanliness. The holes in the tip are particularly small and could very easily become clogged. DO NOT clean the tip with a piece of wire or any other metal device. It will undoubtedly damage the holes in the tip of the burner jet. Clean the jet in alcohol and blow it dry with compressed air. Lighter fluid is a good substitute for alcohol.

Make sure that the burner is positioned so that it is pointing directly at the flue or chimney and in such a way that the proper amount of air can circulate for complete combustion.

The unit should be cleaned once every year. It is a relatively simple job but should not be neglected. First turn off gas, then remove the baffle plate or louver door. Remove the flame blowout guard and disconnect the gas pipeline from the pipe nipple. Be careful not to damage the nut. Remove the pipe nipple which holds the jet as a unit. Clean the unit in the alcohol or lighter fluid and blow it dry with compressed air. Remember that no metal object is to be inserted in the holes of the jet. Clean the burner tube (generator), paying close attention to the gauze. Use a brush or a cloth and blow out any dirt with air. It is not necessary to remove the burner tube for cleaning. Just make sure that you cover the burner jet with a clean cloth so that debris from the burner tube does not fall on the jet. When you replace the parts that have been serviced, be sure to check for leaks. Use the soapy water solution on all of the joints and check for the formation of bubbles.

The purpose of having both electric and gas heating elements is twofold: gas affords self-containment, eliminating the need for the motor home to be connected to electricity and the electric heating elements can be operated by the vehicle's automotive electrical system, enabling the refrigerator to be operating while the motor home is under way.

Even though while the motor home is under way the refrigerator is not completely level all of the time, which has been mentioned as being very important, the refrigerator will operate. The motion of the vehicle allows the refrigerant within the system to circulate at a restricted rate, but sufficient enough to cool the inside of the refrigerator.

If it becomes apparent that the refrigerator refrigeration mechanism itself needs to be repaired, take the unit to a qualified refrigeration mechanic. The refrigerant is corrosive and the hydrogen in the system is very explosive. The whole system is under very high pressure. If the sealed system becomes defective, the entire mechanism has to be replaced anyway so that there is really nothing that can be done in the way of repairs.

Air Conditioning

Aside from the air conditioner manufacturer's recommended maintenance procedures, which would include keeping the air filters, screens, condenser and evaporator coils clean and free from accumulations of dust, dirt, leaves, bugs, etc., there is not much maintenance work which the average motor home owner can do to his unit's air conditioner. Special tools and knowledge are needed to replace most parts. Most relatively small

air conditioners, like those used on Winnebagos, are hermetically sealed. There are no fittings that can be loosened or tightened with a wrench. All the joints are sweated together.

All that will be done here is to explain how an air conditioner works and give an abbreviated troubleshooting chart so that you can have at least a general idea of what might be wrong if your air conditioner doesn't work properly.

THEORY OF OPERATION

Heat is absorbed when a liquid is changed to a vapor. A drop of alcohol on the back of your hand will demonstrate this principle.

Because the alcohol is highly unstable, it will evaporate quickly from a liquid to a vapor and absorb heat from your hand. This elementary evaporator process is the simplest form of refrigeration and, therefore, alcohol might be called a simple type of refrigerant.

If we had an unlimited supply of refrigerant and cost were no factor, we could continuously boil it off and continue to absorb heat by using the refrigerant only once.

To practically apply this system (i.e., recycle the refrigerant), we would need an evaporator, or coil, and a means of metering the refrigerant into one end of the coil. Air passing over the outside of the coils would be cooled as its heat was absorbed by the refrigerant evaporating inside. The gaseous refrigerant would then exhaust to the atmosphere through the open end of the coil.

This is the purpose of all the additional parts and components of the mechanical refrigeration system.

The basic components of a refrigeration system are as follows:

1. An evaporator cooling coil;
2. A suction line;
3. The compressor;
4. The condensing coil;
5. The liquid line;
6. A metering device.

Keep in mind these three basic assumptions:

1. Heat will flow only from a relatively warm substance to a relatively cool substance.

2. A refrigerant exists as both a gas and a liquid at the same temperature, if it is at its "boiling point." A refrigerant at its boiling point will boil and absorb heat from its surrounding air, if the air is warmer than the refrigerant. A refrigerant at its boiling point will condense and become liquid, losing heat to its surrounding air, if it is cooler than the refrigerant.

3. The boiling point of the refrigerant depends upon the pressure of the refrigerant rising as the pressure rises, and falling as the pressure falls.

The following is a description of a

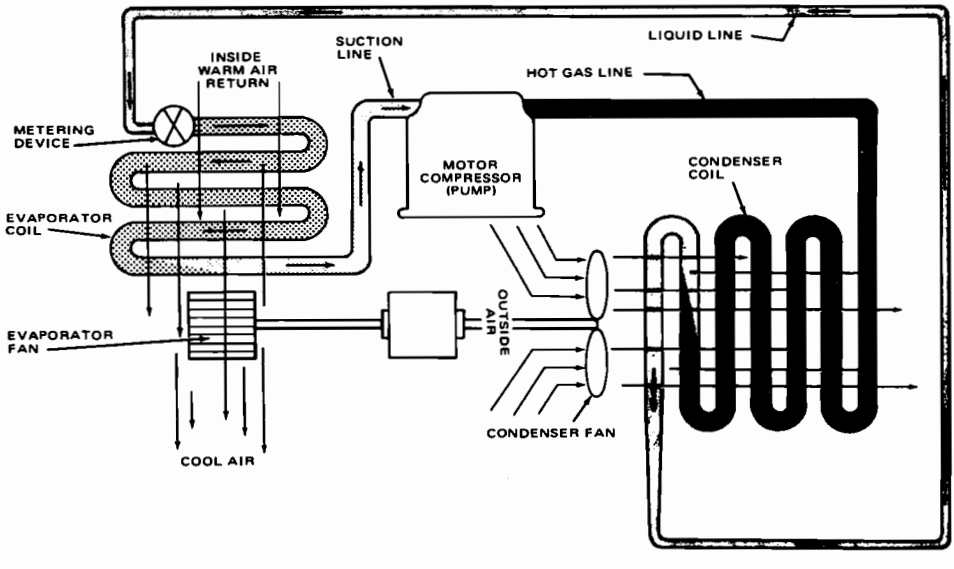

Diagram of the internal parts of an air conditioner

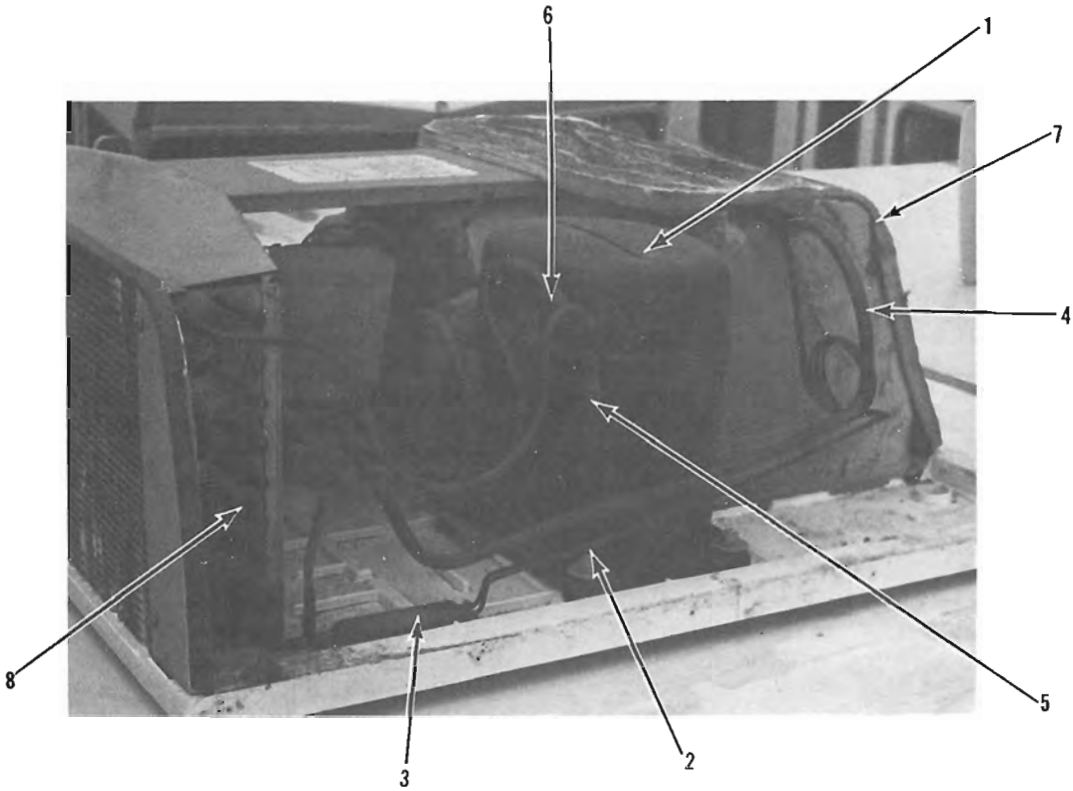

View of the components of a Duo-Therm® roof-mounted air conditioner

1. Compressor
2. Capillary tubes
3. Receiver
4. Suction line
5. High pressure line
6. Section inlet to the compressor
7. Insulation covering the evaporator
8. Condenser coils

basic refrigeration cycle and the state of the refrigerant as it passes through each basic component.

1. The compressor compresses the refrigerant vapor, increasing its temperature and pressure, and forces it along to the condensing coil.

2. At the condensing coil, air, which is cooler than the refrigerant, passes across the outside of the coil and absorbs some of the refrigerant's heat. The refrigerant temperature will decrease until cooled to its saturation point. In this state, the vapor will condense to a liquid.

3. The liquid, which is still under high pressure from the compressor, flows through the small liquid line to a metering device. The metering device can be either a valve or a capillary tube.

4. The high-pressure liquid refrigerant is forced through the metering device, is reduced in pressure, and then expands into the larger area of the evaporator. Under this low-pressure condition, the

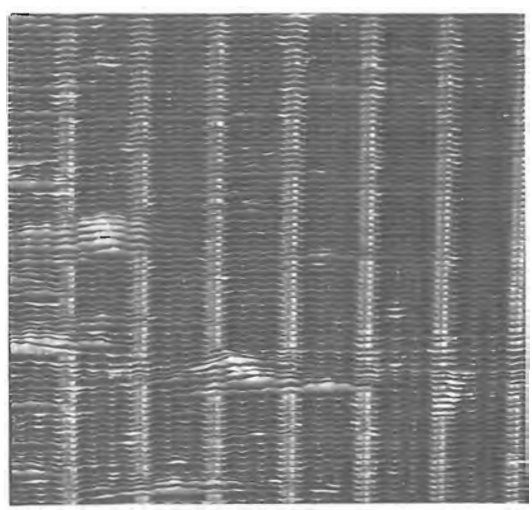

Damaged cooling fins such as these should be carefully straightened

liquid begins to boil until it is in a vapor state.

5. During this change from a liquid to a vapor, the refrigerant absorbs heat from the air flowing across the outside of the coil. The air, losing its heat, becomes very cool, cooling the room.

6. The evaporated and heat-laden refrigerant at low pressure is then drawn into the compressor through the suction line. The whole cycle is then repeated.

The half of the system under high pressure is called the "high side." The other half of the system, which is under low pressure, is called the "low side."

In order to keep your air conditioner operating at peak efficiency, follow these normal maintenance procedures.

1. Clean the air filters regularly. These are usually made of fiberglass or foam rubber and can be washed in soap and warm water. The air conditioner should never be operated without the filters in place.

2. Keep the evaporator coil clean. If the passageways between the fins are plugged, carefully brush down the inner surface with a soft brush or cloth to remove surface lint. Be careful not to flatten or damage the fins. If the coil is clogged to any depth, it may have to be steam cleaned.

3. If your air conditioner is equipped with an evaporator drain tube, check it regularly. If it seems to be clogged by an overflow of condensation, blow through the tube to make sure that it is open. If this doesn't work, run a wire (with the end protected) through the drain tube to open it. Check to see if the tube is kinked or bowed; make sure that it is sloping toward the drain outlet.

4. Keep the condenser coils clean. (See Step 2.)

5. Keep the louvers or screening on the outside cover free from leaves, paper, and the like; the flow of air to the unit could be restricted.

Air Conditioning Troubleshooting Chart

Compressor Does Not Start; No Hum

Causes	*Remedies*
1. Open switch	1. Close switch
2. Fuse blown	2. Replace fuse
3. Broken connection	3. Check circuit and repair
4. Overload stuck	4. Wait for reset; check current
5. Frozen compressor or motor bearings	5. Replace compressor
6. Open circuit in compressor stator	6. Replace compressor

Compressor Starts; Motor Will Not Get Off Starting Windings; High Amperage and Rattle in the Compressor

Causes	*Remedies*
1. Improperly wired	1. Check wiring against diagram
2. Low line voltage	2. Check line voltage and correct
3. Relay defective	3. Replace relay if defective
4. Run capacitor defective	4. Replace capacitor
5. Compressor motor starting and running windings shorted	5. Replace compressor
6. Starting capacitor weak	6. Check capacitor; replace as necessary
7. Tight compressor	7. Check oil level or replace compressor

Compressor Will Not Start—Hums and Trips on Overload

Causes	*Remedies*
1. Improperly wired	1. Check wiring against diagram
2. Low line voltage	2. Check line voltage and correct
3. Starting capacitor defective	3. Replace capacitor
4. Relay contacts not closing	4. Check why the contact points are not closing; replace if defective

Air Conditioning Troubleshooting Chart (cont.)

Compressor Will Not Start—Hums and Trips on Overload

Causes	*Remedies*
5. Compressor motor is grounded or has open winding	5. Replace compressor
6. Tight compressor	6. Check oil level or replace compressor

Compressor Starts and Runs but Short Cycles

Causes	*Remedies*
1. Low line voltage	1. Check line voltage and correct
2. Additional current passing through overload protector	2. Check for wiring diagram. Check the fan motors for connection to the wrong side of protector
3. Run capacitor defective	3. Check capacitance and replace
4. Compressor too hot; inadequate motor cooling	4. Check refrigerant charge; add as necessary
5. Compressor motor windings are shorted	5. Replace compressor
6. Overload protector defective	6. Check current, give reset time; if it does not come back, replace compressor
7. Compressor tight	7. Check oil level, or replace compressor
8. Discharge valve defective	8. Replace compressor

Compressor Short Cycling

Causes	*Remedies*
1. Dirty air filter	1. Replace
2. Refrigerant charge low	2. Recharge system with correct charge
3. Restricted capillary tube	3. Replace
4. Dry condenser	4. Clean condenser
5. Compressor valve leaks	5. Replace compressor
6. Overload protector cutting out	6. Check current; give reset time; if it does not come back, replace compressor

Unit Operates Long or Continuously

Causes	*Remedies*
1. Shortage of refrigerant	1. Fix leak and recharge
2. Control contacts frozen or stuck closed	2. Clean points or replace
3. Insufficient air or dirty condenser	3. Find out and correct
4. Air-conditioned space is poorly insulated or excess load in home	4. Replace with larger unit
5. Compressor valves are defective	5. Replace compressor
6. Restriction in refrigerant system	6. Find out and correct
7. Filter dirty	7. Clean or replace
8. Air is by-passing the coil or service load	8. Check return air and keep doors closed

Space Temperature Too High

Causes	*Remedies*
1. Refrigerant charge low	1. Check for leaks and recharge
2. Control set too high	2. Reset control
3. Cap tube plugged	3. Repair or replace
4. Iced or dirty coils	4. Defrost or clean
5. Unit too small	5. Replace with larger unit
6. Insufficient air circulation	6. Correct air circulation
7. Cap tube does not allow enough refrigerant	7. Replace cap tube
8. High and low pressures approaching each other —compressor valves are defective	8. Replace compressor
9. Low line voltage	9. Decrease load on line or increase wire size

Air Conditioning Troubleshooting Chart (cont.)

Space Temperature Too High

Causes	*Remedies*
10. Dirty air filter	10. Replace
11. Dirty condenser	11. Clean condenser

Starting Capacitor Open, Shorted, or Burned Out

Causes	*Remedies*
1. Relay contacts not operating properly	1. Clean contacts or replace
2. Improper capacitor	2. Check for proper MFD rating and voltage
3. Low voltage	3. Find the reason and correct
4. Improper relay	4. Check parts list and replace
5. Short cycling	5. See the section under the compressor starts and runs, but short cycles

Running Capacitor Open, Shorted, or Burned Out

Causes	*Remedies*
1. Improper capacitor	1. Check for proper MFD rating and voltage
2. Excessive high line voltage	2. Line voltage must be in range; not more than 10 per cent above rated motor voltage. Correct

Relay Shorted or Burned Out

Causes	*Remedies*
1. Line voltage is too low or too high	1. Find the reason and correct
2. Incorrect running capacitor	2. Replace with correct MFD capacitor
3. Relay loose	3. Tighten the relay
4. Short cycling	4. See, compressor starts and runs, but short cycles

Condenser Pressure Too High

Causes	*Remedies*
1. Air in system	1. Purge system
2. Dirty condenser	2. Clean condenser
3. Unit overcharged	3. Discharge some refrigerant
4. Condenser air is off	4. Check condenser motor connections for burnout

Condenser Pressure Too Low

Causes	*Remedies*
1. Refrigerant charge too low	1. Fix leak and recharge the correct amount of refrigerant
2. Compressor discharge or suction valves defective	2. Replace compressor
3. Entering temperature to evaporator is low	3. Raise temperature

Frosted or Sweating Suction Line

Causes	*Remedies*
1. Capillary tube passes excess refrigerant	1. Check the size and bore of capillary tube
2. Evaporator fan not running	2. Repair or replace
3. Overcharge of refrigerant	3. Correct to the right charge

Air Conditioning Troubleshooting Chart (cont.)

Hot Liquid Line

Causes	*Remedies*
1. Low refrigerant charge	1. Fix leak and recharge

Frost on Capillary Tube

Causes	*Remedies*
1. Ice plugging capillary tube	1. Apply hot wet cloth to capillary tube. If suction pressure increases, it is indication of moisture

Noisy Unit

Causes	*Remedies*
1. Tubing rattle	1. Fix so it is free of contact
2. Fan blade causing vibration	2. Check for a bend, and as necessary, replace
3. Refrigerant overcharged. Liquid refrigerant in the compressor or oil is too high	3. Check for right refrigerant charge and maintain oil level. As necessary, replace capillary tube
4. Loose parts or mountings	4. Fix and tighten
5. Motor bearings worn	5. Replace motor
6. Leak of oil in the compressor	6. Add required oil

13 · Body

Bumpers

Removal and Installation

Remove the nuts, bolts, and washers attaching the bumper to the bumper support, or in the case of one-piece bumper assemblies, attaching the bumper supports to the frame. Remove the bumper from the vehicle. Install the bumper in the reverse order of removal.

Grille Assembly

The following procedure is for replacing the grille on Indian and Chieftain models. The procedure can also be adapted to the Brave models. The only difference will be the shape of the grille and the locations of the attaching screws. Also the front lower molding must be sealed on the Brave models. On the

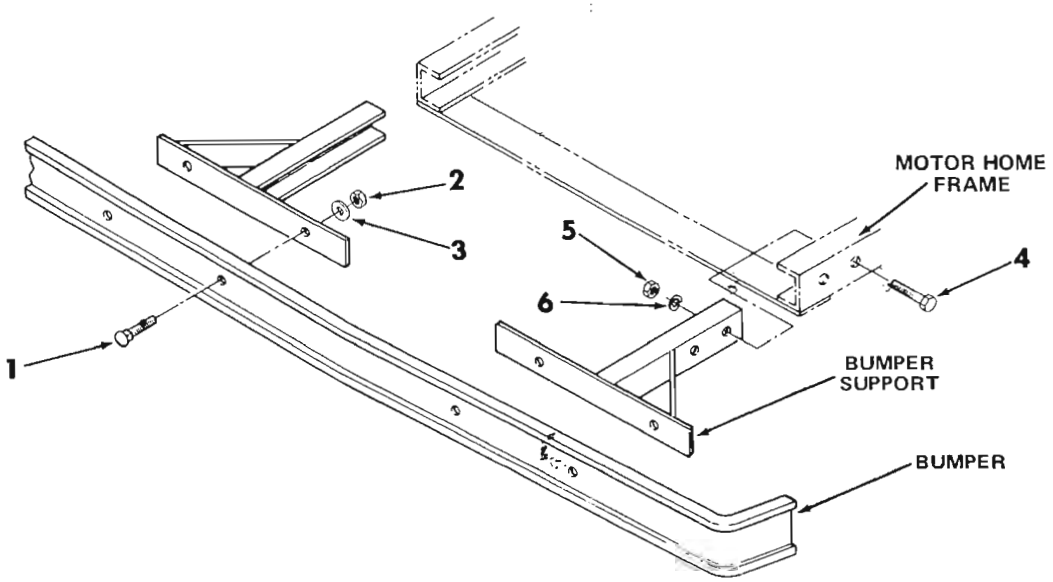

The front bumper assembly (Chieftan and Indian)

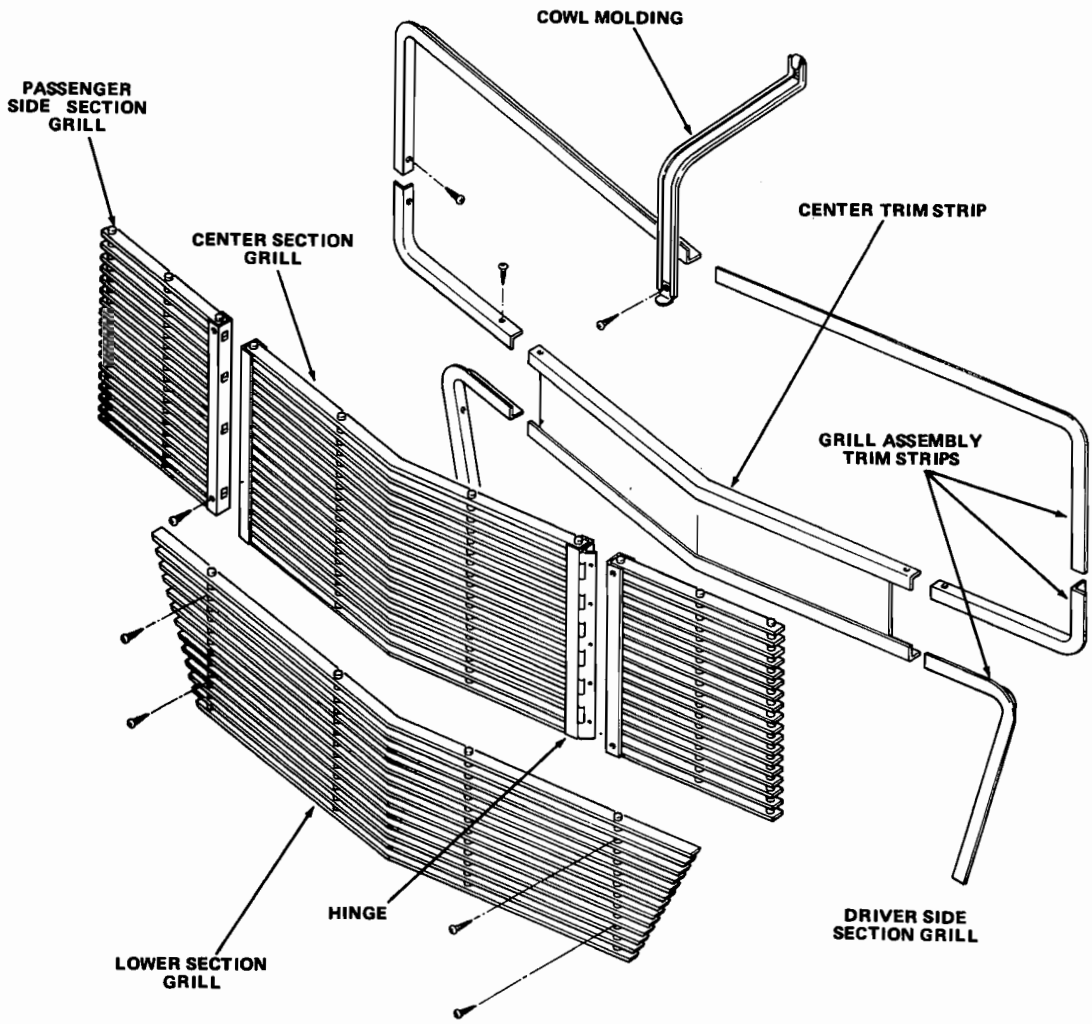

Grille assembly (Chieftan)

Chieftain and Indian models, the trim strips are in sections and can be replaced individually by removing the retaining screws.

Removal and Installation

Driver Side Section

1. Open the center section of the grille and remove the pop rivets which secure the driver side grille section to the hinge. Remove the center section.
2. Remove the attaching screws and pull the driver side section grille out.
3. Install the driver side grille section in the reverse order of removal, using either nuts and bolts or pop rivets to secure the hinge on the center section to the driver side grille section.

Passenger Side Section

The passenger side section is removed and installed in the same manner as the driver side section except that it is not necessary to remove the center section. The center section must be opened to gain access to the attaching screws of the passenger side section.

Lower Section Grille

The lower section grille is removed by removing the 4 attaching screws and removing the grille. Install the grille in the reverse order of removal.

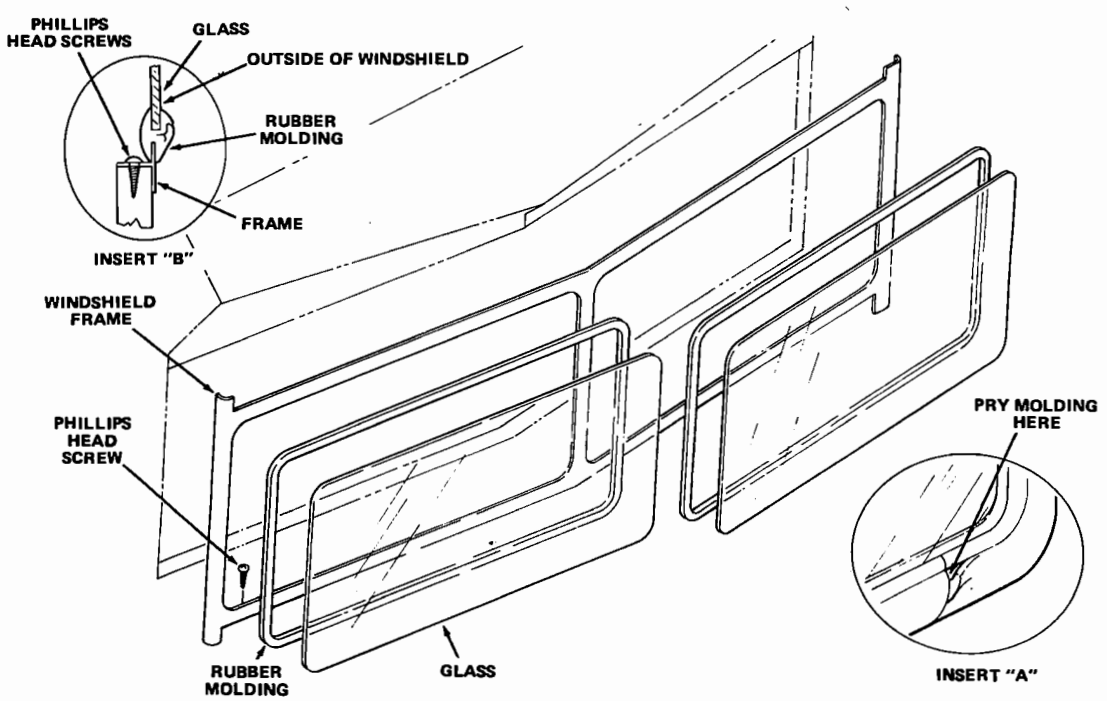

Windshield assembly

Windshield

Glass Replacement

1. Using a screwdriver or similar tool, carefully pry the lower portion of the rubber molding away from the upper portion at the point where the two ends of the molding meet.

2. Pry the molding apart all the way around the windshield section to be replaced. This will release the molding pressure on the windshield and allow it to be removed.

3. Remove the windshield by pressing it outward, starting at the lower right-hand corner for the right-side glass and at the lower left-hand corner for the left-side glass. You will have to pry the glass out of the rubber molding.

4. Lubricate the windshield supporting channel of the rubber molding with silicone lubricant. Lay a length of strong string or plastic-covered clothes line in the windshield supporting channel, around the entire windshield molding several times, leaving enough line hanging out to grasp. Position the windshield glass at different points in the windshield supporting channel. You will have to pry the upper lip of the molding away in order to support the windshield.

5. With the windshield positioned and one hand firmly pressing in on the windshield, slowly pull the string out of the windshield supporting channel. The string should pull the upper lip of the molding out and place the edge of the windshield in the supporting channel

6. Work the lower portion of the molding into the upper lip around the entire windshield.

Windows (All Except the Windshield)

Replacement

The following window replacement procedure should be used for all of the windows in the coach except the front windshield. Damaged window glass cannot be replaced individually; the entire

window and frame assembly must be replaced.

1. Cut the silicone sealer around the outside window frame.

2. Remove all of the screws securing the window frame. These screws are removed from the inside of the motor home.

3. Remove the inside frame section.

4. Using a small block of wood and a claw hammer or pry bar, carefully pry the outside window frame assembly away from the wall. Use the block of wood as a fulcrum. The frame may stick because of the use of gasket tape seal around the outside of the frame.

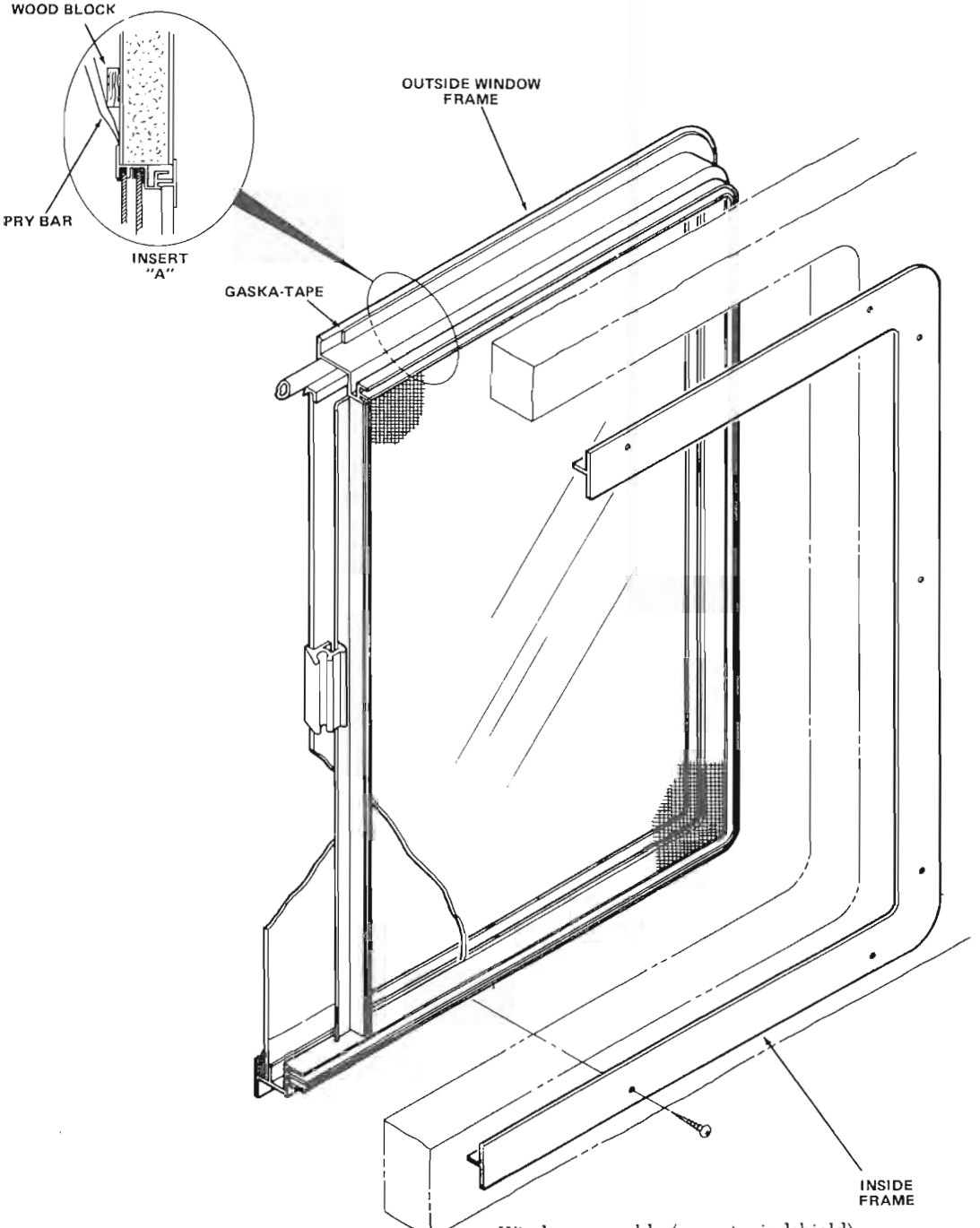

Window assembly (except windshield)

5. Remove the gasket tape from around the window frame only if the window is going to be used again.

6. Remove the old silicone sealer from around the window frame cutout.

7. Install new gasket tape around the outside window frame.

8. Install the outside window frame.

9. Install the inside window frame.

10. Replace all of the window frame screws.

11. Apply silicone sealer around the outside of the window frame.

Appendix

General Conversion Table

Multiply by	*To convert*	*To*	
2.54	Inches	Centimeters	.3937
30.48	Feet	Centimeters	.0328
.914	Yards	Meters	1.094
1.609	Miles	Kilometers	.621
.645	Square inches	Square cm.	.155
.836	Square yards	Square meters	1.196
16.39	Cubic inches	Cubic cm.	.061
28.3	Cubic feet	Liters	.0353
.4536	Pounds	Kilograms	2.2045
4.546	Gallons	Liters	.22
.068	Lbs./sq. in. (psi)	Atmospheres	14.7
.138	Foot pounds	Kg. m.	7.23
1.014	H.P. (DIN)	H.P. (SAE)	.9861
——	To obtain	From	Multiply by

Note: 1 cm. equals 10 mm.; 1 mm. equals .0394″.

Conversion—Common Fractions to Decimals and Millimeters

Inches			Inches			Inches		
Common Fractions	*Decimal Fractions*	*Millimeters (approx.)*	*Common Fractions*	*Decimal Fractions*	*Millimeters (approx.)*	*Common Fractions*	*Decimal Fractions*	*Millimeters (approx.)*
1/128	.008	0.20	11/32	.344	8.73	43/64	.672	17.07
1/64	.016	0.40	23/64	.359	9.13	11/16	.688	17.46
1/32	.031	0.79	3/8	.375	9.53	45/64	.703	17.86
3/64	.047	1.19	25/64	.391	9.92	23/32	.719	18.26
1/16	.063	1.59	13/32	.406	10.32	47/64	.734	18.65
5/64	.078	1.98	27/64	.422	10.72	3/4	.750	19.05
3/32	.094	2.38	7/16	.438	11.11	49/64	.766	19.45
7/64	.109	2.78	29/64	.453	11.51	25/32	.781	19.84
1/8	.125	3.18	15/32	.469	11.91	51/64	.797	20.24
9/64	.141	3.57	31/64	.484	12.30	13/16	.813	20.64
5/32	.156	3.97	1/2	.500	12.70	53/64	.828	21.03
11/64	.172	4.37	33/64	.516	13.10	27/32	.844	21.43
3/16	.188	4.76	17/32	.531	13.49	55/64	.859	21.83
13/64	.203	5.16	35/64	.547	13.89	7/8	.875	22.23
7/32	.219	5.56	9/16	.563	14.29	57/64	.891	22.62
15/64	.234	5.95	37/64	.578	14.68	29/32	.906	23.02
1/4	.250	6.35	19/32	.594	15.08	59/64	.922	23.42
17/64	.266	6.75	39/64	.609	15.48	15/16	.938	23.81
9/32	.281	7.14	5/8	.625	15.88	61/64	.953	24.21
19/64	.297	7.54	41/64	.641	16.27	31/32	.969	24.61
5/16	.313	7.94	21/32	.656	16.67	63/64	.984	25.00
21/64	.328	8.33						

Conversion—Millimeters to Decimal Inches

mm	*inches*	*mm*	*inches*	*mm*	*inches*	*mm*	*inches*	*mm*	*inches*
1	.039 370	31	1.220 470	61	2.401 570	91	3.582 670	210	8.267 700
2	.078 740	32	1.259 840	62	2.440 940	92	3.622 040	220	8.661 400
3	.118 110	33	1.299 210	63	2.480 310	93	3.661 410	230	9.055 100
4	.157 480	34	1.338 580	64	2.519 680	94	3.700 780	240	9.448 800
5	.196 850	35	1.377 949	65	2.559 050	95	3.740 150	250	9.842 500
6	.236 220	36	1.417 319	66	2.598 420	96	3.779 520	260	10.236 200
7	.275 590	37	1.456 689	67	2.637 790	97	3.818 890	270	10.629 900
8	.314 960	38	1.496 050	68	2.677 160	98	3.858 260	280	11.032 600
9	.354 330	39	1.535 430	69	2.716 530	99	3.897 630	290	11.417 300
10	.393 700	40	1.574 800	70	2.755 900	100	3.937 000	300	11.811 000
11	.433 070	41	1.614 170	71	2.795 270	105	4.133 848	310	12.204 700
12	.472 440	42	1.653 540	72	2.834 640	110	4.330 700	320	12.598 400
13	.511 810	43	1.692 910	73	2.874 010	115	4.527 550	330	12.992 100
14	.551 180	44	1.732 280	74	2.913 380	120	4.724 400	340	13.385 800
15	.590 550	45	1.771 650	75	2.952 750	125	4.921 250	350	13.779 500
16	.629 920	46	1.811 020	76	2.992 120	130	5.118 100	360	14.173 200
17	.669 290	47	1.850 390	77	3.031 490	135	5.314 950	370	14.566 900
18	.708 660	48	1.889 760	78	3.070 860	140	5.511 800	380	14.960 600
19	.748 030	49	1.929 130	79	3.110 230	145	5.708 650	390	15.354 300
20	.787 400	50	1.968 500	80	3.149 600	150	5.905 500	400	15.748 000
21	.826 770	51	2.007 870	81	3.188 970	155	6.102 350	500	19.685 000
22	.866 140	52	2.047 240	82	3.228 340	160	6.299 200	600	23.622 000
23	.905 510	53	2.086 610	83	3.267 710	165	6.496 050	700	27.559 000
24	.944 880	54	2.125 980	84	3.307 080	170	6.692 900	800	31.496 000
25	.984 250	55	2.165 350	85	3.346 450	175	6.889 750	900	35.433 000
26	1.023 620	56	2.204 720	86	3.385 820	180	7.086 600	1000	39.370 000
27	1.062 990	57	2.244 090	87	3.425 190	185	7.283 450	2000	78.740 000
28	1.102 360	58	2.283 460	88	3.464 560	190	7.480 300	3000	118.110 000
29	1.141 730	59	2.322 830	89	3.503 903	195	7.677 150	4000	157.480 000
30	1.181 100	60	2.362 200	90	3.543 300	200	7.874 000	5000	196.850 000

To change decimal millimeters to decimal inches, position the decimal point where desired on either side of the millimeter measurement shown and reset the inches decimal by the same number of digits in the same direction. For example, to convert .001 mm into decimal inches, reset the decimal behind the 1 mm (shown on the chart) to .001; change the decimal inch equivalent (.039" shown) to .00039").

Tap Drill Sizes

Screw & Tap Size	National Fine or S.A.E. Threads Per Inch	Use Drill Number
No. 5	44	37
No. 6	40	33
No. 8	36	29
No. 10	32	21
No. 12	28	15
1/4	28	3
5/16	24	I
3/8	24	Q
7/16	20	W
1/2	20	29/64
9/16	18	33/64
5/8	18	37/64
3/4	16	11/16
7/8	14	13/16
1 1/8	12	1 3/64
1 1/4	12	1 11/64
1 1/2	12	1 27/64

Screw & Tap Size	National Coarse or U.S.S. Threads Per Inch	Use Drill Number
No. 5	40	39
No. 6	32	36
No. 8	32	29
No. 10	24	25
No. 12	24	17
1/4	20	8
5/16	18	F
3/8	16	5/16
7/16	14	U
1/2	13	27/64
9/16	12	31/64
5/8	11	17/32
3/4	10	21/32
7/8	9	49/64
1	8	7/8
1 1/8	7	63/64
1 1/4	7	1 7/64
1 1/2	6	1 11/32

Decimal Equivalent Size of the Number Drills

Drill No.	Decimal Equivalent	Drill No.	Decimal Equivalent	Drill No.	Decimal Equivalent
80	.0135	53	.0595	26	.1470
79	.0145	52	.0635	25	.1495
78	.0160	51	.0670	24	.1520
77	.0180	50	.0700	23	.1540
76	.0200	49	.0730	22	.1570
75	.0210	48	.0760	21	.1590
74	.0225	47	.0785	20	.1610
73	.0240	46	.0810	19	.1660
72	.0250	45	.0820	18	.1695
71	.0260	44	.0860	17	.1730
70	.0280	43	.0890	16	.1770
69	.0292	42	.0935	15	.1800
68	.0310	41	.0960	14	.1820
67	.0320	40	.0980	13	.1850
66	.0330	39	.0995	12	.1890
65	.0350	38	.1015	11	.1910
64	.0360	37	.1040	10	.1935
63	.0370	36	.1065	9	.1960
62	.0380	35	.1100	8	.1990
61	.0390	34	.1110	7	.2010
60	.0400	33	.1130	6	.2040
59	.0410	32	.1160	5	.2055
58	.0420	31	.1200	4	.2090
57	.0430	30	.1285	3	.2130
56	.0465	29	.1360	2	.2210
55	.0520	28	.1405	1	.2280
54	.0550	27	.1440		

Decimal Equivalent Size of the Letter Drills

Letter Drill	Decimal Equivalent	Letter Drill	Decimal Equivalent	Letter Drill	Decimal Equivalent
A	.234	J	.277	S	.348
B	.238	K	.281	T	.358
C	.242	L	.290	U	.368
D	.246	M	.295	V	.377
E	.250	N	.302	W	.386
F	.257	O	.316	X	.397
G	.261	P	.323	Y	.404
H	.266	Q	.332	Z	.413
I	.272	R	.339		

ANTI-FREEZE INFORMATION

Freezing and Boiling Points of Solutions According to Percentage of Alcohol or Ethylene Glycol

Freezing Point of Solution	Alcohol Volume %	Alcohol Solution Boils at	Ethylene Glycol Volume %	Ethylene Glycol Solution Boils at
20°F.	12	196°F.	16	216°F.
10°F.	20	189°F.	25	218°F.
0°F.	27	184°F.	33	220°F.
–10°F.	32	181°F.	39	222°F.
–20°F.	38	178°F.	44	224°F.
–30°F.	42	176°F.	48	225°F.

Note: above boiling points are at sea level. For every 1,000 feet of altitude, boiling points are approximately 2°F. lower than those shown. For every pound of pressure exerted by the pressure cap, the boiling points are approximately 3°F. higher than those shown.

To Increase the Freezing Protection of Anti-Freeze Solutions Already Installed

Cooling System Capacity Quarts	Number of Quarts of **ALCOHOL** Anti-Freeze Required to Increase Protection													
	From +20°F. to					From +10°F. to					From 0°F. to			
	0°	−10°	−20°	−30°	−40°	0°	−10°	−20°	−30°	−40°	−10°	−20°	−30°	−40°
10	2	2 3/4	3 1/2	4	4 1/2	1	2	2 2/3	3 1/4	3 3/4	1	1 3/4	2 1/2	3
12	2 1/2	3 1/4	4	4 3/4	5 1/4	1 1/4	2 1/4	3	3 3/4	4 1/2	1 1/4	2	2 3/4	3 1/2
14	3	4	4 3/4	5 1/2	6	1 1/2	2 1/2	3 1/2	4 1/2	5	1 1/4	2 1/2	3 1/4	4
16	3 1/4	4 1/2	5 1/2	6 1/4	7	1 3/4	3	4	5	5 3/4	1 1/2	2 3/4	3 3/4	4 3/4
18	3 3/4	5	6	7	7 3/4	2	3 1/4	4 1/2	5 3/4	6 1/2	1 3/4	3	4 1/4	5 1/4
20	4	5 1/2	6 3/4	7 3/4	8 3/4	2	3 1/4	5	6 1/4	7 1/4	1 3/4	3 1/2	4 3/4	5 3/4
22	4 1/2	6	7 1/2	8 1/2	9 1/2	2 1/4	4	5 1/2	6 3/4	8	2	3 3/4	5 1/4	6 1/2
24	5	6 3/4	8	9 1/4	10 1/2	2 1/2	4 1/2	6	7 1/2	8 3/4	2 1/4	4	5 1/2	7
26	5 1/4	7 1/4	8 3/4	10	11 1/4	2 3/4	4 3/4	6 1/2	8	9 1/2	2 1/2	4 1/2	6	7 1/2
28	5 3/4	7 3/4	9 1/2	11	12	3	5 1/4	7	8 3/4	10 1/4	2 1/2	4 3/4	6 1/2	8
30	6	8 1/4	10	11 3/4	13	3	5 1/2	7 1/2	9 1/4	10 3/4	2 3/4	5	7	8 3/4

Test radiator solution with proper tester. Determine from the table the number of quarts of solution to be drawn off from a full cooling system and replace with concentrated anti-freeze, to give the desired increased protection. For example, to increase protection of a 22-quart cooling system containing Alcohol anti-freeze, from +10°F. to −20°F. will require the replacement of 5 1/2 quarts of solution with concentrated anti-freeze.

Cooling System Capacity Quarts	Number of Quarts of **ETHYLENE GLYCOL** Anti-Freeze Required to Increase Protection													
	From +20°F. to					From +10°F. to					From 0°F. to			
	0°	−10°	−20°	−30°	−40°	0°	−10°	−20°	−30°	−40°	−10°	−20°	−30°	−40°
10	1 3/4	2 1/4	3	3 1/2	3 3/4	3/4	1 1/2	2 1/4	2 3/4	3 1/4	3/4	1 1/2	2	2 1/2
12	2	2 3/4	3 1/2	4	4 1/2	1	1 3/4	2 1/2	3 1/4	3 3/4	1	1 3/4	2 1/2	3 1/4
14	2 1/4	3 1/4	4	4 3/4	5 1/2	1 1/4	2	3	3 3/4	4 1/2	1	2	3	3 1/2
16	2 1/2	3 1/2	4 1/2	5 1/4	6	1 1/4	2 1/2	3 1/2	4 1/4	5 1/4	1 1/4	2 1/4	3 1/4	4
18	3	4	5	6	7	1 1/2	2 3/4	4	5	5 3/4	1 1/2	2 1/2	3 3/4	4 3/4
20	3 1/4	4 1/2	5 3/4	6 3/4	7 1/2	1 3/4	3	4 1/4	5 1/2	6 1/2	1 1/2	2 3/4	4 1/4	5 1/4
22	3 1/2	5	6 1/4	7 1/4	8 1/4	1 3/4	3 1/4	4 3/4	6	7 1/4	1 3/4	3 1/4	4 1/2	5 1/2
24	4	5 1/2	7	8	9	2	3 1/2	5	6 1/2	7 1/2	1 3/4	3 1/2	5	6
26	4 1/4	6	7 1/2	8 3/4	10	2	4	5 1/2	7	8 1/4	2	3 3/4	5 1/2	6 3/4
28	4 1/2	6 1/4	8	9 1/2	10 1/2	2 1/4	4 1/4	6	7 1/2	9	2	4	5 3/4	7 1/4
30	5	6 3/4	8 1/2	10	11 1/2	2 1/2	4 1/2	6 1/2	8	9 1/2	2 1/4	4 1/4	6 1/4	7 3/4

Test radiator solution with proper hydrometer. Determine from the table the number of quarts of solution to be drawn off from a full cooling system and replace with undiluted anti-freeze, to give the desired increased protection. For example, to increase protection of a 22-quart cooling system containing Ethylene Glycol (permanent type) anti-freeze, from +20°F. to −20°F. will require the replacement of 6 1/4 quarts of solution with undiluted anti-freeze.

ANTI-FREEZE CHART

Temperatures Shown in Degrees Fahrenheit
+32 is Freezing

Cooling System Capacity Quarts	Quarts of **ALCOHOL** Needed for Protection to Temperatures Shown Below												
	1	2	3	4	5	6	7	8	9	10	11	12	13
10	+23°	+11°	− 5°	−27°									
11	+25	+13	0	−18	−40°								
12		+15	+ 3	−12	−31								
13		+17	+ 7	− 7	−23								
14		+19	+ 9	− 3	−17	−34°							
15		+20	+11	+ 1	−12	−27							
16		+21	+13	+ 3	− 8	−21	−36°						
17		+22	+16	+ 6	− 4	−16	−29						
18		+23	+17	+ 8	− 1	−12	−25	−38°					
19		+24	+17	+ 9	+ 2	− 8	−21	−32					
20			+18	+11	+ 4	− 5	−16	−27	−39°				
21			+19	+12	+ 5	− 3	−12	−22	−34				
22			+20	+14	+ 7	0	− 9	−18	−29	−40°			
23			+21	+15	+ 8	+ 2	− 7	−15	−25	−36°			
24			+21	+16	+10	+ 4	− 4	−12	−21	−31			
25			+22	+17	+11	+ 6	− 2	− 9	−18	−27	−37°		
26			+22	+17	+12	+ 7	+ 1	− 7	−14	−23	−32		
27			+23	+18	+13	+ 8	+ 3	− 5	−12	−20	−28	−39°	
28			+23	+19	+14	+ 9	+ 4	− 3	− 9	−17	−25	−34	
29			+24	+19	+15	+10	+ 6	− 1	− 7	−15	−22	−30	−39°
30			+24	+20	+16	+11	+ 7	+ 1	− 5	−12	−19	−27	−35

+ Figures are above Zero, but below Freezing.

− Figures are below Zero. Also below Freezing.

Cooling System Capacity Quarts	Quarts of **ETHYLENE GLYCOL** Needed for Protection to Temperatures Shown Below													
	1	2	3	4	5	6	7	8	9	10	11	12	13	14
10	+24°	+16°	+ 4°	−12°	−34°	−62°								
11	+25	+18	+ 8	− 6	−23	−47								
12	+26	+19	+10	0	−15	−34	−57°							
13	+27	+21	+13	+ 3	− 9	−25	−45							
14			+15	+ 6	− 5	−18	−34							
15			+16	+ 8	0	−12	−26							
16			+17	+10	+ 2	− 8	−19	−34	−52°					
17			+18	+12	+ 5	− 4	−14	−27	−42					
18			+19	+14	+ 7	0	−10	−21	−34	−50°				
19			+20	+15	+ 9	+ 2	− 7	−16	−28	−42				
20				+16	+10	+ 4	− 3	−12	−22	−34	−48°			
21				+17	+12	+ 6	0	− 9	−17	−28	−41			
22				+18	+13	+ 8	+ 2	− 6	−14	−23	−34	−47°		
23				+19	+14	+ 9	+ 4	− 3	−10	−19	−29	−40		
24				+19	+15	+10	+ 5	0	− 8	−15	−23	−34	−46°	
25				+20	+16	+12	+ 7	+ 1	− 5	−12	−20	−29	−40	−50°
26					+17	+13	+ 8	+ 3	− 3	− 9	−16	−25	−34	−44
27					+18	+14	+ 9	+ 5	− 1	− 7	−13	−21	−29	−39
28					+18	+15	+10	+ 6	+ 1	− 5	−11	−18	−25	−34
29					+19	+16	+12	+ 7	+ 2	− 3	− 8	−15	−22	−29
30					+20	+17	+13	+ 8	+ 4	− 1	− 6	−12	−18	−25

For capacities over 30 quarts divide true capacity by 3. Find quarts Anti-Freeze for the 1/3 and multiply by 3 for quarts to add.

For capacities under 10 quarts multiply true capacity by 3. Find quarts Anti-Freeze for the tripled volume and divide by 3 for quarts to add.